Sept. 24, 1968 O. R. BAKER ET AL 3,402,695

LIQUID APPLICATOR SYSTEM

Filed Oct. 24, 1966 2 Sheets-Sheet 1

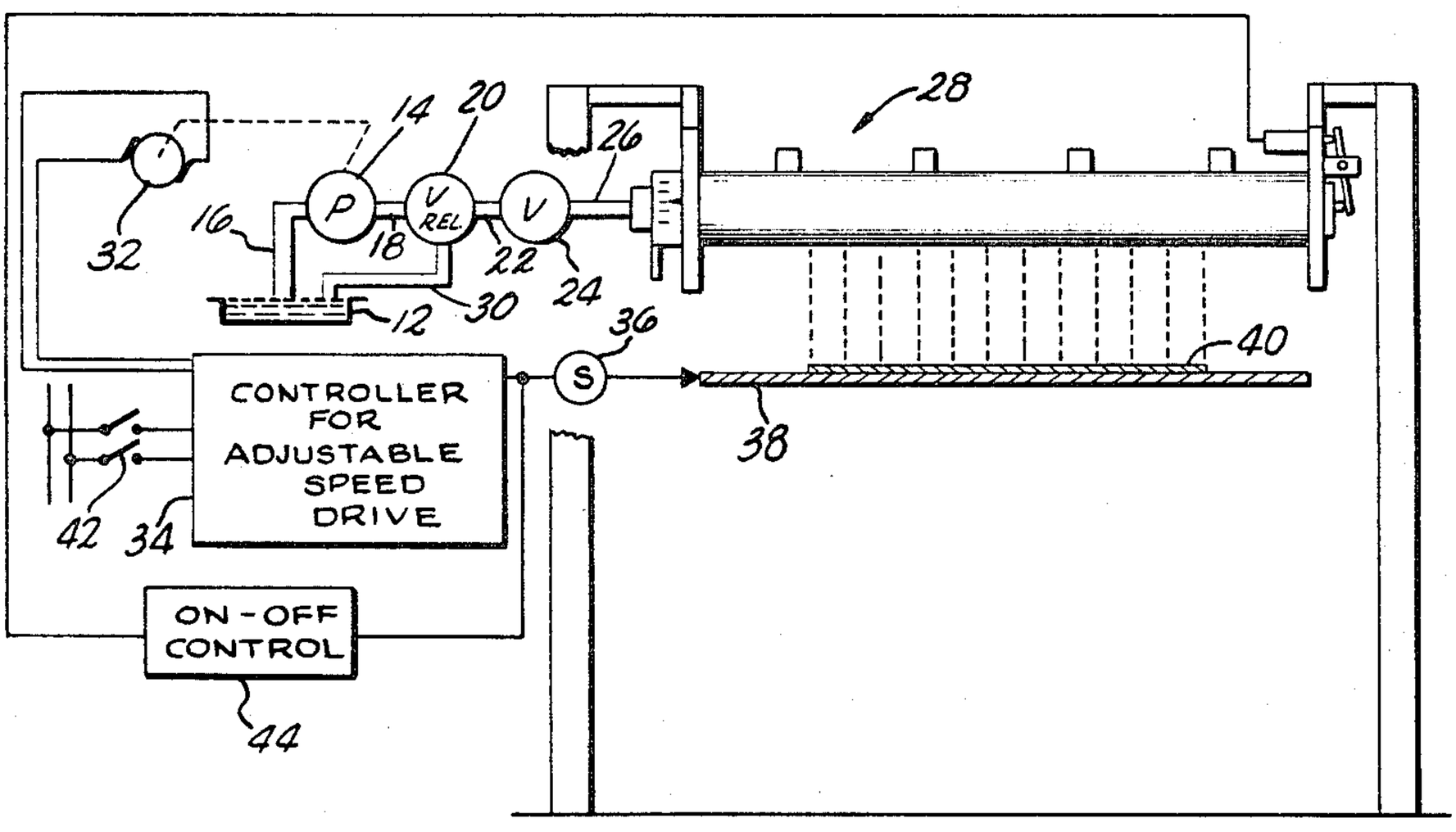

FIG. 1

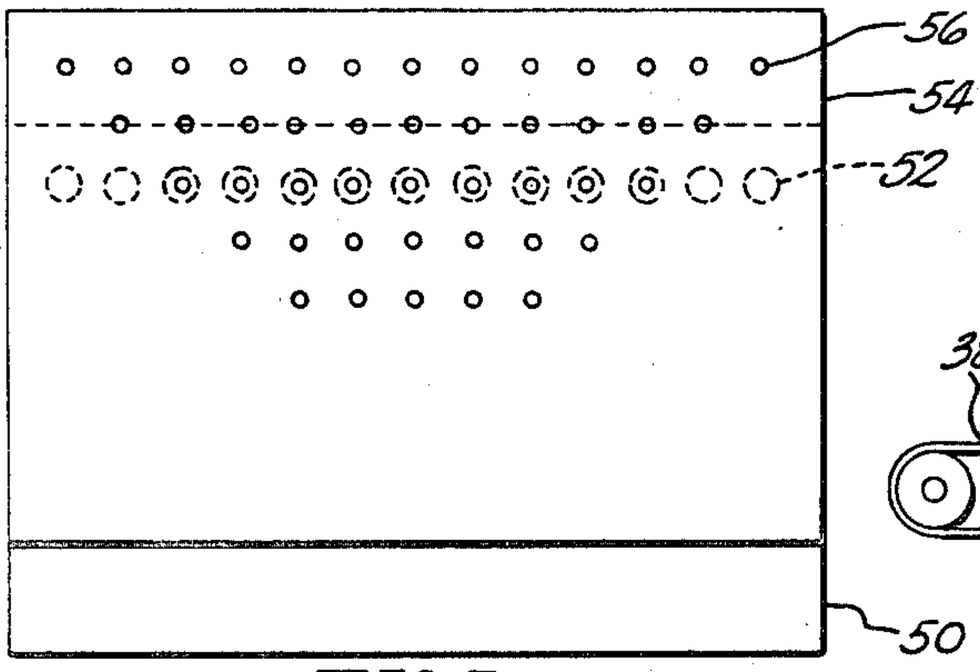

FIG. 7

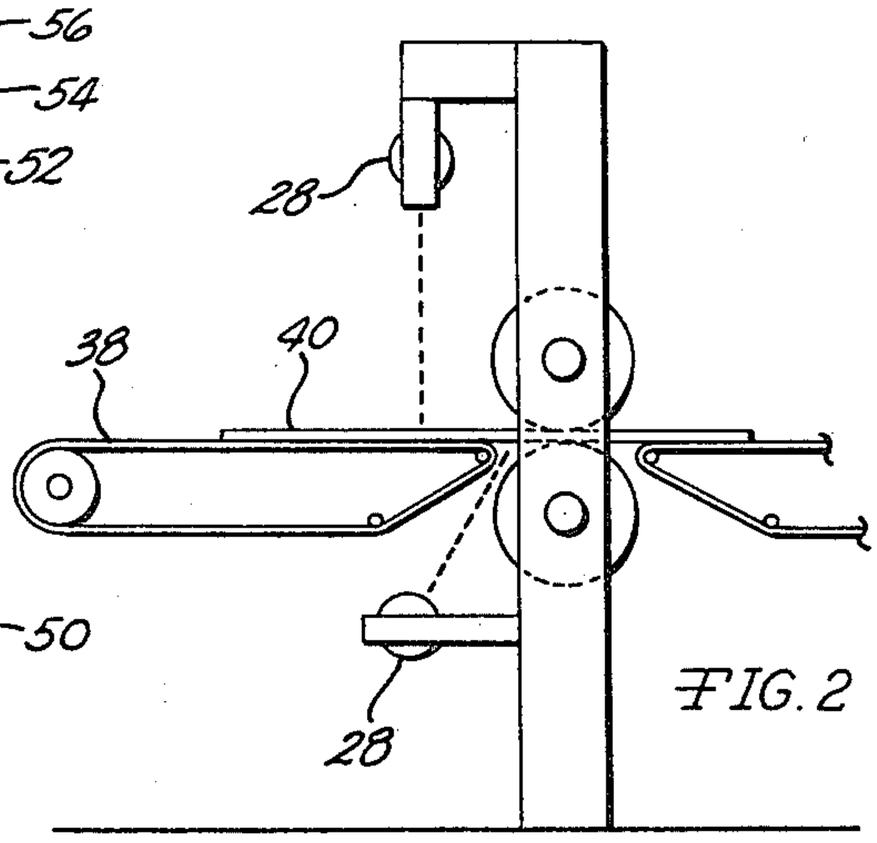

FIG. 2

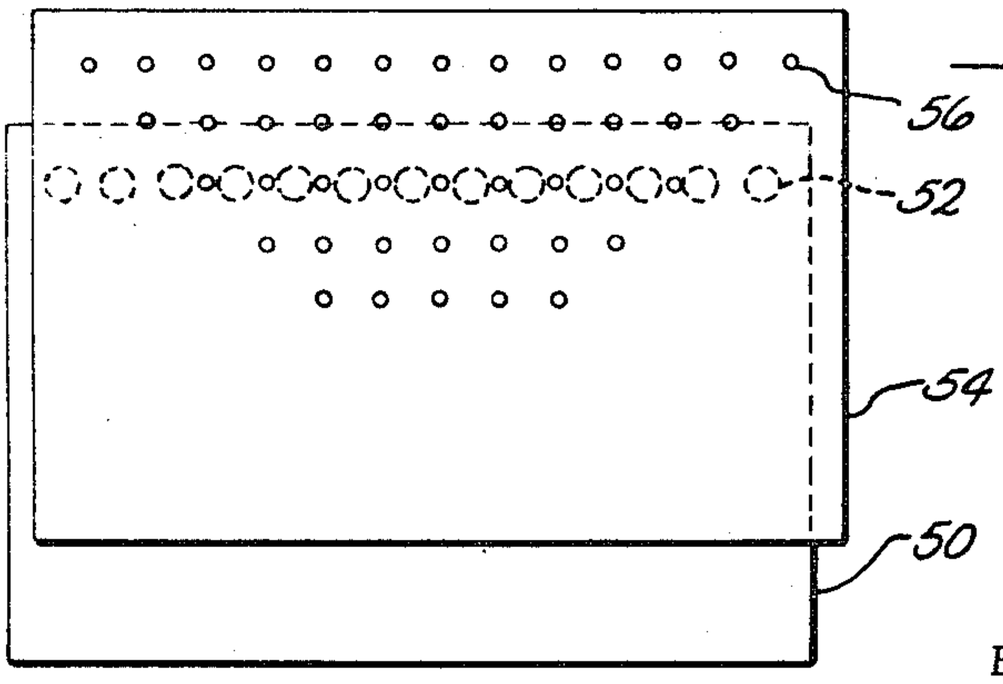

FIG. 8

INVENTORS
OWEN R. BAKER
ROBERT M. GUBBINS
RUDOLPH G. HENTSCHEL

BY Olsen and Stephenson
ATTORNEYS

Sept. 24, 1968 O. R. BAKER ETAL 3,402,695

LIQUID APPLICATOR SYSTEM

Filed Oct. 24, 1966 2 Sheets-Sheet 2

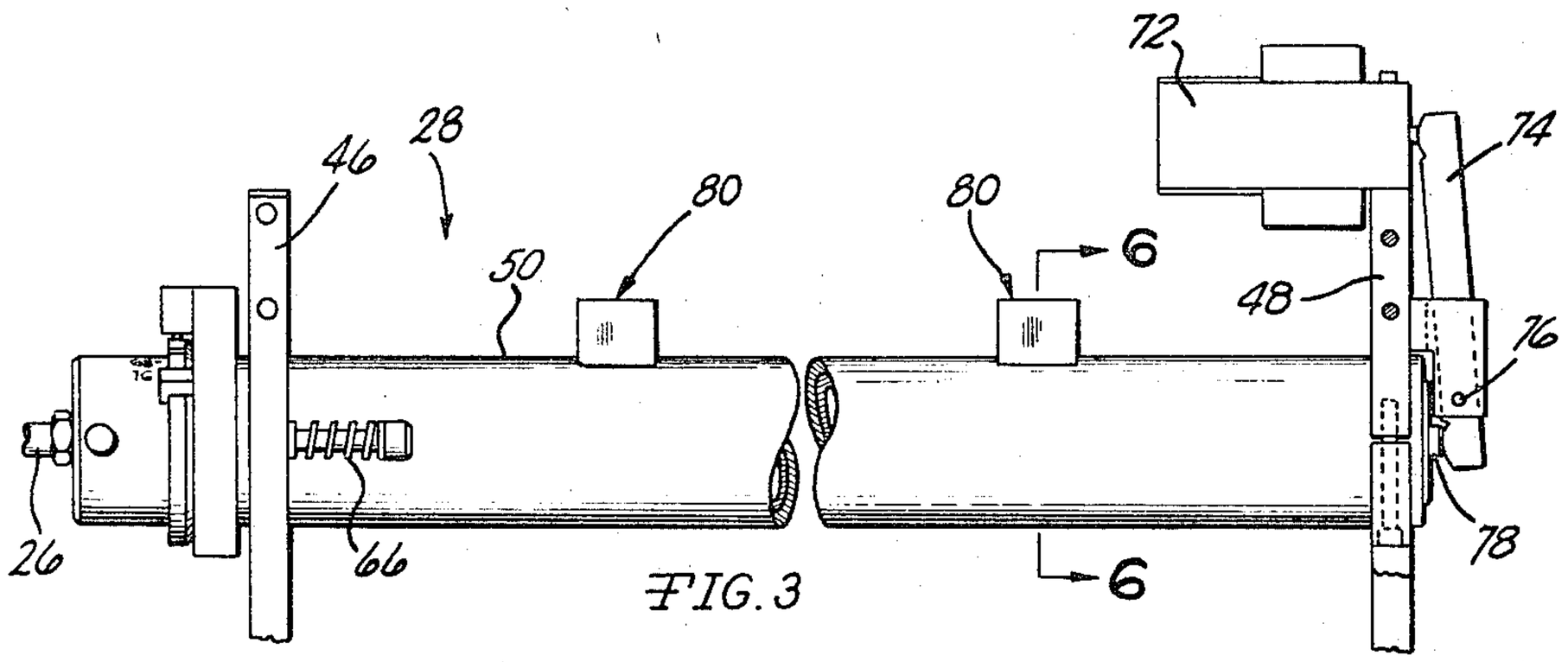

FIG. 3

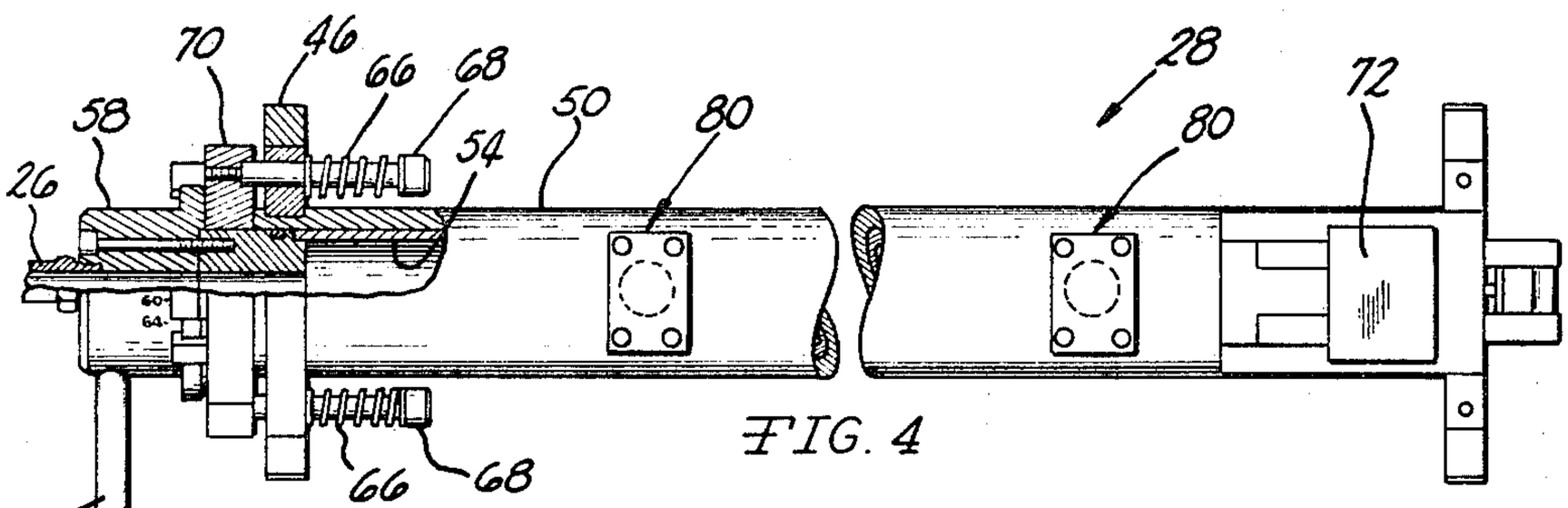

FIG. 4

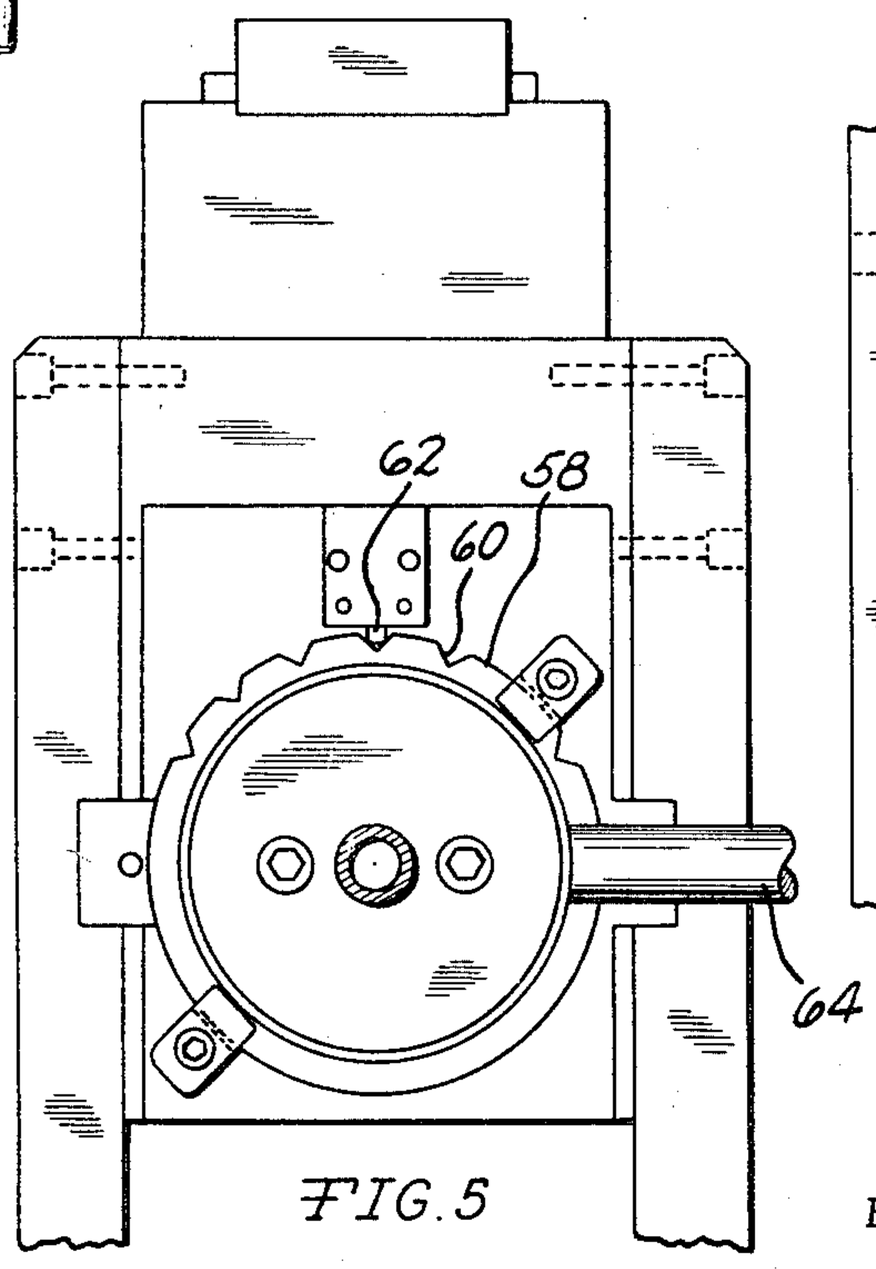

FIG. 5

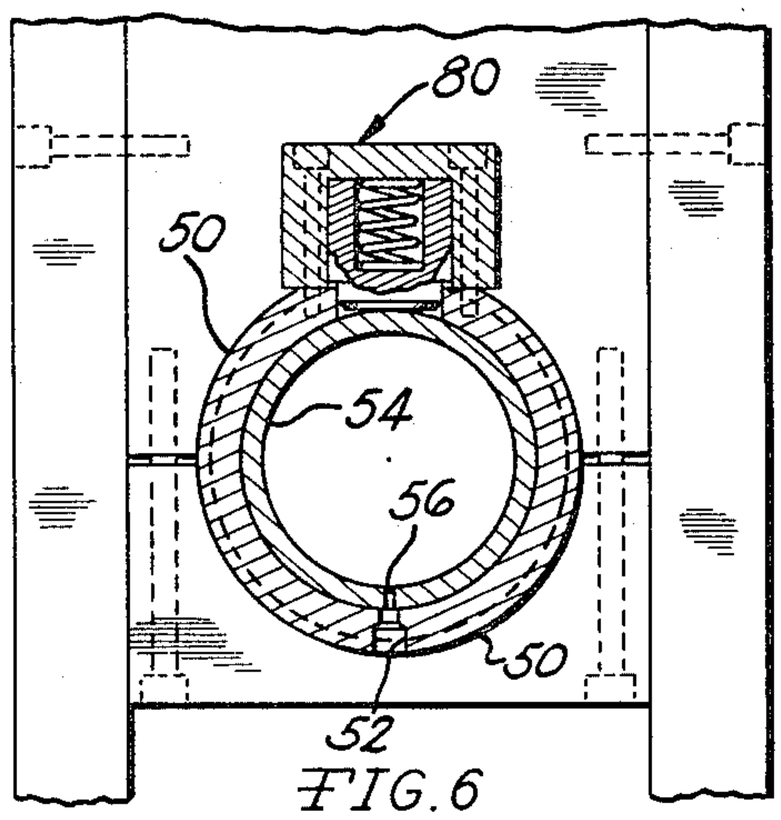

FIG. 6

INVENTORS
OWEN R. BAKER
ROBERT M. GUBBINS
RUDOLPH G. HENTSCHEL

BY Olsen and Stephenson
ATTORNEYS

United States Patent Office

3,402,695

Patented Sept. 24, 1968

3,402,695

LIQUID APPLICATOR SYSTEM

Owen R. Baker, Bloomfield Hills, Robert M. Gubbins, Birmingham, and Rudolf G. Hentschel, Ann Arbor, Mich., assignors to Baker & Gubbins Co., Clawson, Mich., a corporation of Michigan

Filed Oct. 24, 1966, Ser. No. 588,967

10 Claims. (Cl. 118—7)

ABSTRACT OF THE DISCLOSURE

Apparatus for applying liquid to workpieces traveling on a moving conveyor. A positive displacement pump is driven by a variable speed electric motor for delivering the liquid to a header positioned over the conveyor for feed of the liquid onto the workpieces. Controls are provided to vary the rate of discharge of the liquid in accordance with the rate of travel of the conveyor, and to stop discharge when movement of the conveyor is interrupted. A mechanism is provided for varying the width of discharge of the liquid to accommodate workpieces of varying sizes carried by the conveyor.

The present invention relates to a liquid applicator system for use in applying liquids to workpieces of a variety of widths, and the invention is directed in particular to an improved applicator header for use in such a system.

A variety of liquids are employed in industry to aid in the processing of material. Typical examples in the metal processing industries are the application of oils when metals are to be reduced in size, to be cleaned, or to be prepared for storage. Thus, hot rolled strip and sheet metal are frequently treated with rolling lubricants and rust inhibitors at the end of the pickle line; or in the reducing processes of cold rolled sheet and strip metal, lubricants and/or cleaning agents are applied prior to annealing of the metal.

At the present time very little attention is being given to the way in which the liquids used in processing strip or sheet metals are being applied to such workpieces. The procedure commonly followed today for carrying out operations of this character normally involves employing a liquid reservoir containing the fluid to be applied, and such reservoir is placed sufficiently high above ground level so that it may feed an applicator header by gravity, the header being located at a position over a conveyor which is used to move the workpieces. The header consists essentially of a steel tube equipped with spigots which dispense the fluid by gravity onto the workpieces passing below on the conveyor. The spigots are equipped with knobs permitting manual adjustment or stopping of the flow of liquids. The workpieces to be coated are passed below the header by means of the conveyor, and normally the spigots are fully or partially open so that liquid falls upon the workpieces as they pass.

The liquid not clinging to the workpieces or conveyor is normally not recovered and reused, because the required filtering and other recovering procedures needed would make the operation uneconomical.

The procedure used heretofore has a number of shortcomings. The fact that the liquid source for supplying the header is normally placed above the header is both inconvenient and impractical, particularly when it is kept in mind that the workpieces that are being passed under the header may change in width on frequent occasions during a normal working shift in the steel mills. The conveyor width represents the limit of the maximum width of a workpiece that can pass under the header, and the header, therefore, in order to meet its intended purpose, must

have a width sufficient to allow a width of liquid distribution to cover the entire belt. Under these conditions the liquid is wasted if a workpiece has a width which is less than the full width of the conveyor unless certain spigots are manually closed. It is found in practice that the operators or workmen along the conveyor frequently do not close the spigots which are not needed, and consequently a waste of the liquid occurs.

Another shortcoming of the existing system is that the liquid will be dispensed continually and at a substantially constant rate regardless of the rate of movement of the conveyor. Thus, if the conveyor should stop for any reason, the liquid will continue to be dispensed as long as the liquid reservoir and header contain such a liquid. Again, it is recognized that the spigots could be closed, but it is frequently found that because of the inaccessibility of the header, the workmen do not close such spigots each time a stoppage of the conveyor occurs.

Since the conveyor does stop frequently during a normal workshift, the rate of speed of the conveyor will also vary frequently, that is, during acceleration and deceleration phases associated with the stops. At these time periods, constant liquid dispensation will also occur, because the rate of liquid flow has been set to correspond to the proper liquid coverage on the metal or workpiece at maximum conveyor speed.

Thus, it is apparent that a great waste of coating liquid is associated with the systems now employed in the industry for coating workpieces, because the shutdown time and accelerating and decelerating time periods comprise a substantial percentage of the time associated with the normal metal processing operations, and during such time periods and during the shutdown period substantial amounts of liquid are dispensed which are wasted or are in excess of that required for coating the workpieces. This waste is in addition to the waste that occurs due to the lack of width control of the header outlet. Furthermore, no control of the liquid flow rate exists, which means that no correction can be made to change the rate of liquid flow in case the combination of gravity feed and header and spigot design fails to coincide with the maximum required rate of liquid flow at maximum conveyor speed. These shortcomings all create the additional problem that the operator may set the spigots at positions well below the positions required at maximum conveyor speed, in order to reduce the waste of liquid in the shutdown time periods as well as in the time periods of deceleration and acceleration of the conveyor.

Accordingly, it is an object of the present invention to provide an improved liquid applicator system for use in processing workpieces of various widths, which is constructed and arranged so that liquid can be applied on workpieces traveling on a conveyor and the effective width of liquid being discharged onto the workpieces can readily be changed to correspond in width to that of the workpieces.

It is another object of the present invention to provide a liquid applicator system of the foregoing character which has pump means for supplying the liquid to a header and in which regulating means are provided which are responsive to the rate of movement of the workpiece so that substantially uniform applications of the liquid will be made irrespective of the rate of movement of the workpiece.

It is still another object of the present invention to provide a liquid applicator system of the foregoing character which is constructed and arranged so that the application of the liquid can easily be interrupted in event workpieces are not traveling below the header.

It is still another object of the present invention to provide an improved liquid applicator header for use in a liquid applicator system of the foregoing character.

According to one form of the present invention, a liquid applicator system is provided comprising a conveyor for moving workpieces, and a novel header is mounted transversely above the conveyor having outlet means for discharging liquid onto the workpieces carried by the conveyor. The header includes an outer cylindrical housing and an inner cylindrical sleeve telescoped thereinto and movable axially and rotationally with respect thereto. The housing has a row of spaced liquid outlet openings arranged in an axial direction across the width of the conveyor surface. The sleeve has a plurality of rows of spaced liquid outlet openings arranged in an axial direction with the first of the rows corresponding in number and spacing to the openings in the housing and each succeeding row in the sleeve progressively decreasing in numbers from at least one row-end so as to provide progressively less numbers of effective openings from the header when each of such succeeding rows is in registry with the row of the housing. A first mechanism is provided for selectively rotating the sleeve so that a desired row of the sleeve is in registry with the row of the housing, thereby effecting discharge of liquid of a desired width. A second mechanism is provided for axially displacing the sleeve to positions where the desired row is moved either into or out of registry with the row of the housing, thereby either allowing the flow to occur according to the width that is desired or completely terminating the flow. A gear pump is provided for supplying the liquid to the header and the gear pump is driven by a variable speed motor. Suitable sensing means are associated with the conveyor so as to detect the speed at which the conveyor is traveling and to regulate the speed of the pump motor in accordance with the conveyor speed.

Other objects of this invention will appear in the following description and appended claims, reference being had to the accompanying drawings forming a part of this specification wherein like reference characters designate corresponding parts in the several views.

In the drawings:

FIGURE 1 is a schematic elevational view taken normal to the path of movement of the conveyor belt, illustrating one embodiment of the present invention;

FIGURE 2 is a schematic side elevational view showing the location of the invention with respect to conventional conveyor equipment;

FIGURE 3 is an enlarged fragmentary elevational view of an applicator header of the type illustrated in FIGURE 1;

FIGURE 4 is a top plan view of the applicator header illustrated in FIGURE 3, with portions broken away for the purpose of description;

FIGURE 5 is an enlarged end elevation as seen from the left in FIGURE 3;

FIGURE 6 is an enlarged section taken on the line **6—6** of FIGURE 3;

FIGURE 7 is a developed arrangement of the housing and sleeve comprising parts of the header, showing one of the positions these two parts can assume relative to one another; and

FIGURE 8 is a view similar to that of FIGURE 7, but illustrating another relative position that the two parts can assume with respect to one another.

Before explaining the present invention in detail, it is to be understood that the invention is not limited in its application to the details of construction and arrangement of parts illustrated in the accompanying drawings, since the invention is capable of other embodiments and of being practiced or carried out in various ways. Also, it is to be understood that the phraseology or terminology employed herein is for the purpose of description and not of limitation.

Referring now to the drawings, the invention will be described in greater detail. The liquid application system will first be described with respect to FIGURE 1 after which the details of the header will be described.

The liquid application system **10** comprises a reservoir **12** which represents a source of the liquid which is to be applied to workpieces. A constant displacement gear pump **14** has its suction side connected to the reservoir by means of the hose **16**. The gear pump **14** is of a type so that the volumetric output of the pump varies linearly with the rate of revolution at which it is driven. The output of gear pump **14** is connected by hose **18** to a relief valve **20** which in turn is connected by another hose **22** to a trim valve **24**, and the latter has its outlet connected by means of hose **26** to the inlet head end of the header **28**. The relief valve **20** is a conventional valve which returns liquid via the hose **30** to the reservoir **12** in the event the back pressure from the header **28** exceeds a predetermined amount. The trim valve **24** functions to limit the maximum of liquid flow to the header **28**. This rate will be established in accordance with the particular needs of the system and the capacity of the header.

The pump **14** is driven by a variable speed electric motor **32** the speed of which is controlled by the controller **34**. The controller **34** is equipped for controlling the revolutions per minute of the motor **32** over a range of approximately 20 to 1. The controller is also equipped with a tachometer input circuit which allows the controller to accept the signal of a mechanically driven tachometer generator or speed sensor **36**. The latter is positioned adjacent to the conveyor belt **38** on which the workpieces **40** are moved. The electrical energy for operating the motor **32** is supplied through a conventional switch mechanism **42**. In electrical circuit with the speed sensor **36** is an "on-off" control unit **44** which functions to control shutting off or opening of the header **28** in a manner to be described.

Referring now to the remaining figures in the drawings, the header **28** will be described in greater detail. The header **28** is supported on a pair of stationary upright supports positioned on opposite sides of the conveyor **38**. These upright supports are identified by the reference numbers **46** and **48**. The header **28** has an outer housing **50** which is held in a stationary position in the supports **46** and **48** and it has a series of outlet openings **52** extending axially along the lower surface in sufficient numbers to extend the full width of the conveyor belt which passes below. Positioned within the housing **50** is a sleeve **54** which has a plurality of rows of openings **56** extending axially along the length which are adapted to be moved into registry with the rows of holes in the housing **50**. As will presently be described with respect to FIGURES 7 and 8, the rows of holes in the sleeve **54** have progressively less holes per row so as to vary the effective width of discharge of liquid from the header **28**. It is to be understood that the sleeve **54** can be rotated relative to the housing **50** for effecting this operation.

A selected-width indicator **58** is secured to the sleeve **54** and has a plurality of notches **60** which cooperate with the detent mechanism **62** for retaining the sleeve **54** in any of a series of selected positions with respect to the housing **50**. The selected-width indicator **58** is moved to the various desired positions by means of the width-control level **64** which is rigidly attached thereto.

The header **28** is also equipped with means for shutting off completely the flow of liquid. This result is achieved by axially displacing the sleeve **54** relative to the stationary housing **50** in a manner which will now be described. Spring means **66** are operatively positioned between the sleeve **54** and housing **50** to urge the sleeve **54** to the closed position shown in FIGURES 3 and 4. As there shown, the bolts **68** are secured to the member **70** which is movable with the sleeve **54**, and the bolts are slidable with respect to the support **46** which rigidly retains in place the housing **50**. Thus, the sleeve **54** can be moved to the left against the spring pressure of the spring means **66** to permit discharge of liquid, but it will be urged back to the position shown in FIGURES 3 and 4 when the forces moving the sleeve to the left are withdrawn. For

the purpose of moving the sleeve **54** axially against the spring pressures of the spring means **66**, a solenoid **72** is provided. When this solenoid is activated, it will pivot the lever **74** about the pivot **76** so as to urge the button **78** on the end of the sleeve **54** to the left against the springs **66**. By thus displacing the sleeve **54** relative to the housing **50**, all of the holes or openings in the sleeve **54** will be moved into registry with the row of holes in the housing **50** thereby permitting discharge of liquid from the header **28**. As soon as the solenoid **72** is de-energized, the spring means **66** will function to restore the sleeve **54** to its normal position shown in FIGURES 3 and 4 interrupting such discharge. It will be understood that suitable O-rings and other sealing means are provided to assure an effective seal between the sleeve **54** and housing **50**.

It is also contemplated that spring means **80** may be employed for urging the sleeve **54** in a downward direction relative to the housing **50** so as to minimize the possibility of liquid from within the sleeve **54** leaking between the sleeve **54** and the housing **50** rather than being discharged directly outward through the outlet openings **52**. It will be understood that the spring means **80** will have the effect of urging the bottom surface of the sleeve **54** into snug engagement with the inner and lower surface of housing **50**.

From the foregoing description, it will be understood that the header **28** consists essentially of an inner sleeve and outer housing, the outer housing having a row of orifices, and the inner sleeve having multiple rows of orifices. There is also the provision to either align a row of orifices on the inner sleeve with a selected row on the outer housing or to misalign the inner sleeve outlets completely for the purpose of interrupting the flow.

Referring now to FIGURES 7 and 8, a preferred arrangement of the holes in the housing **50** and the sleeve **54** will be described. For the purpose of clarity, the housing **50** and the sleeve **54** are shown as rectangular developments. The development of sleeve **54** is shown positioned on top of the development of the housing **50**. The row of openings **52** in the housing **50** can be seen in the broken lines and a plurality of rows of openings **56** can be seen in the development of the sleeve **54**. It will be observed that the uppermost or first of the rows of openings in the sleeve **54** has openings corresponding in number and spacing to the openings in the housing **50**, and each succeeding row progressively decreases in number of openings from the ends of the rows so as to provide progressively less numbers of effective openings that are usable for discharging liquid from the header, when each such succeeding row is in registry with the one row in the housing **50**. Thus, in FIGURE 7 it can be seen that the row of openings in the housing **50** is in registry with the third row of openings in the sleeve **54**. In this situation the two end openings **52** are not effective to discharge liquid from the header because they are closed by the sleeve **54**.

Referring now to FIGURE 8, it will be seen that axially displacement of the sleeve **54** will have the effect of completely interrupting flow of liquid from the header, because under these circumstances all of the openings **52** are out of registry with the openings in the row of the sleeve **54** which is aligned therewith.

With the foregoing description in mind, the operation of the system will now be described in greater detail. Assume that the conveyor belt **38** is stationary and the switch **42** is open. Under these circumstances there will be no output signal from the tachometer generator or speed sensor **36**. When the switch **42** is then closed, the motor **42** will begin to run at $\frac{1}{20}$th of its full revolutions per minute thus operating the pump **14** so that it delivers $\frac{1}{20}$th of its maximum gallons per minute. This action will fill the header **26** with liquid, because the "on-off" control **44**, through solenoid **72** and lever **74**, will assure that the outlets of the header are closed. Once the header **28** is filled with fluid, the relief valve **20** will start returning liquid to the reservoir **12**.

When the steel mill is started up so that the conveyor belt **38** moves workpieces **40** past the header, the speed sensor **36** will produce an output voltage to the control unit **15** which in turn will energize the solenoid **72** thereby actuating the lever **74** to open the header **28**. Constant flow of liquid at a rate of $\frac{1}{20}$ of the maximum capacity of the pump **14** will occur until the mill speed exceeds $\frac{1}{20}$ of its maximum setting. When the mill speed has passed this mark, the control unit **34** will operate to increase the speed of the motor **32** thereby proportionately increasing the supply of liquid to the header **28**.

At all times the effective discharge width of the header **28** is selected by means of the selectable width indicator **58** so that the width of fluid being discharged onto the conveyor belt and workpieces corresponds to the width of the workpieces that are being carried on the conveyor belt **38**.

It is to be understood that the selector indicator can be replaced by an electric motor of the type which can be operated to move the selector indicator to any desired position, and this motor can be remotely controlled from a suitable control panel.

In operation, normally only one header will be required which will be positioned above the conveyor belt **38** for discharge onto the workpiece **40** in the manner shown in FIGURE 2. Under certain circumstances it may be desired to place a second header below the belt at a location such as is shown in FIGURE 2 for applying liquid to the lower side of the workpiece, but normally this is not done since the metal will be rolled onto a coil or stacked one on top of another after they have been reduced, and the coated upper side of the metal will contact the uncoated under side to provide the desired coatings on both sides. However, with a controlled pressure of liquid discharge, in some instances applications such as that shown in FIGURE 2 may be employed. In this respect it is to be understood that the liquid should not be sprayed onto the workpiece, because spraying would result in atomizing of the liquid resulting in such atomized liquid being diffused into the atmosphere of the plant. Normally this is not permitted in operations of this type, and therefore it is important that the liquid flow as streams against the workpieces. To achieve such results the proper liquid pressure must be maintained in the header and appropriate sizes for openings **52** must be used. Normally, it is preferred that the openings **52** have larger diameters than the openings **56**.

From the foregoing description it will be understood that an improved liquid applicator system as well as an improved header has been developed for applying liquids to workpieces. The invention not only operates in a vastly superior manner to that known heretofore, but it has other features which are also desirable. Thus, it is of importance to be able to clean the header quickly. The illustrated embodiment of the invention permits easy cleaning of the smaller orifices of the inner sleeve, because the inner sleeve can quickly be removed from the stationary outer housing. It is only necessary to unscrew the bolts **68** and to pull out the inner sleeve. Then the sleeve can be blown out or the clogged orifices, if any, can be cleaned out either individually or by applying air through the liquid input hose at the one end of the sleeve.

Having thus described our invention, we claim:

1. A liquid applicator system for use in processing workpieces of various widths such as strip or sheet metal and the like, comprising a conveyor for moving such workpieces, a header mounted transversely above said conveyor having a row of outlet orifice means spaced along its transverse dimension for discharging liquid onto workpieces carried by said conveyor, first means in said header for selectively closing certain of said orifice means from each end of said row for varying the effective

transverse width of liquid discharged from the header, second means in said header for simultaneously opening or closing said outlet means, pump means for pumping liquid from a source of supply to said header, and regulating means responsive to movement of said conveyor for regulating operation of the pumping means.

2. A liquid applicator system for use in processing workpieces of various widths such as strip or sheet metal and the like, comprising a conveyor for moving such workpieces, a header mounted transversely above said conveyor having outlet means for discharging liquid onto workpieces carried by said conveyor, first means in said header for selectively varying the effective transverse width of liquid discharged from the header, second means in said header for simultaneously opening or closing said outlet means, pump means for pumping liquid from a source of supply to said header, and regulating means responsive to movement of said conveyor for regulating operation of the pumping means, said header including an outer cylindrical housing and an inner cylindrical sleeve telescoped thereinto and moveable axially and rotationally with respect thereto, said housing having a row of spaced liquid outlet openings arranged in an axial direction along its lower surface, said sleeve having a plurality of rows of spaced liquid outlet openings arranged in an axial direction, the first of said rows having openings corresponding in number and spacing to the openings in said housing and each succeeding row progressively decreasing in numbers from the row-ends so as to provide progressively less numbers of effective openings from the header when each of such succeeding rows is in registry with the row in said housing, said first means including a mechanism for selectively rotating said sleeve so that a desired row of the sleeve is in registry, said second means including a mechanism for axially displacing said sleeve to positions wherein the desired row is moved into or out of registry.

3. A liquid applicator system according to claim **2**, wherein said mechanism for selectively rotating said sleeve comprises a handle secured to one end of said sleeve, and detent means for retaining the sleeve in positions of registry of its row of openings.

4. A liquid applicator system according to claim **2**, wherein said mechanism for axially displacing said sleeve comprises spring means for urging said sleeve to a normal position out of registry of the openings and a solenoid-actuated lever for moving said sleeve against the action of the spring means when the solenoid is energized to a position of registry of the openings.

5. A liquid applicator system according to claim **1**, wherein said pump means comprises a positive displacement pump and a variable speed motor for driving said pump, and said regulating means are responsive to the speed of said conveyor for varying correspondingly the speed of said motor.

6. In a liquid applicator system for use in processing workpieces of various widths wherein said workpieces

are moved on a conveyor, the combination of a conveyor, a liquid applicator header mounted transversely of said conveyor including an outer cylindrical housing and an inner cylindrical sleeve telescoped thereinto and movable axially and rotationally with respect thereto, said housing having a row of spaced liquid outlet openings arranged in an axial direction along its lower surface, said sleeve having a plurality of rows of spaced liquid outlet openings arranged in an axial direction, the first of said rows having openings corresponding in number and spacing to the openings in said housing and each succeeding row progressively decreasing in numbers from at least one row-end so as to provide progressively less numbers of effective openings from the header when each of such succeeding rows is in registry with the row of said housing, a first mechanism for selectively rotating said sleeve so that a desired row of the sleeve is in registry with the row of said housing, and a second mechanism for axially displacing said sleeve to positions wherein the desired row is moved either into or out of registry.

7. In a liquid applicator system, a liquid applicator header according to claim **6**, wherein said first mechanism comprises a handle secured to one end of said sleeve, and detent means operably positioned between said sleeve and said housing for retaining the sleeve in positions of registry of its rows of openings.

8. In a liquid applicator system, a liquid applicator header according to claim **6**, wherein said second mechanism comprises spring means operably positioned for urging said sleeve to a normal position out of registry of the openings of said desired row with the openings in the row of said housing, and a solenoid-actuated member for moving said sleeve axially against the action of the spring means when the solenoid is energized to a position of registry of the holes.

9. In a liquid applicator system, a liquid applicator header according to claim **6**, wherein spring means are positioned between said housing and said sleeve for urging the sleeve against said lower surface of said housing.

10. In a liquid applicator system, a liquid applicator header according to claim **6**, wherein the openings in the rows of said sleeve have a smaller area than the openings in the rows of said housing.

References Cited

UNITED STATES PATENTS

667,947	2/1901	Morrison	222—485
1,390,383	9/1921	Powell	222—486 X
2,827,928	3/1958	Guckel	222—486 X
2,960,060	11/1960	Chatterton.	
3,032,239	5/1962	Whitley et al.	222—486
3,182,867	5/1965	Borosko et al.	222—486
3,276,397	10/1966	Poppe et al.	118—24 X

ROBERT W. MICHELL, *Primary Examiner.*

JOHN P. McINTOSH, *Assistant Examiner.*