Sept. 24, 1968 M. RODSTEIN ET AL 3,402,686

TUFTING MACHINE

Filed Sept. 11, 1967 6 Sheets-Sheet 1

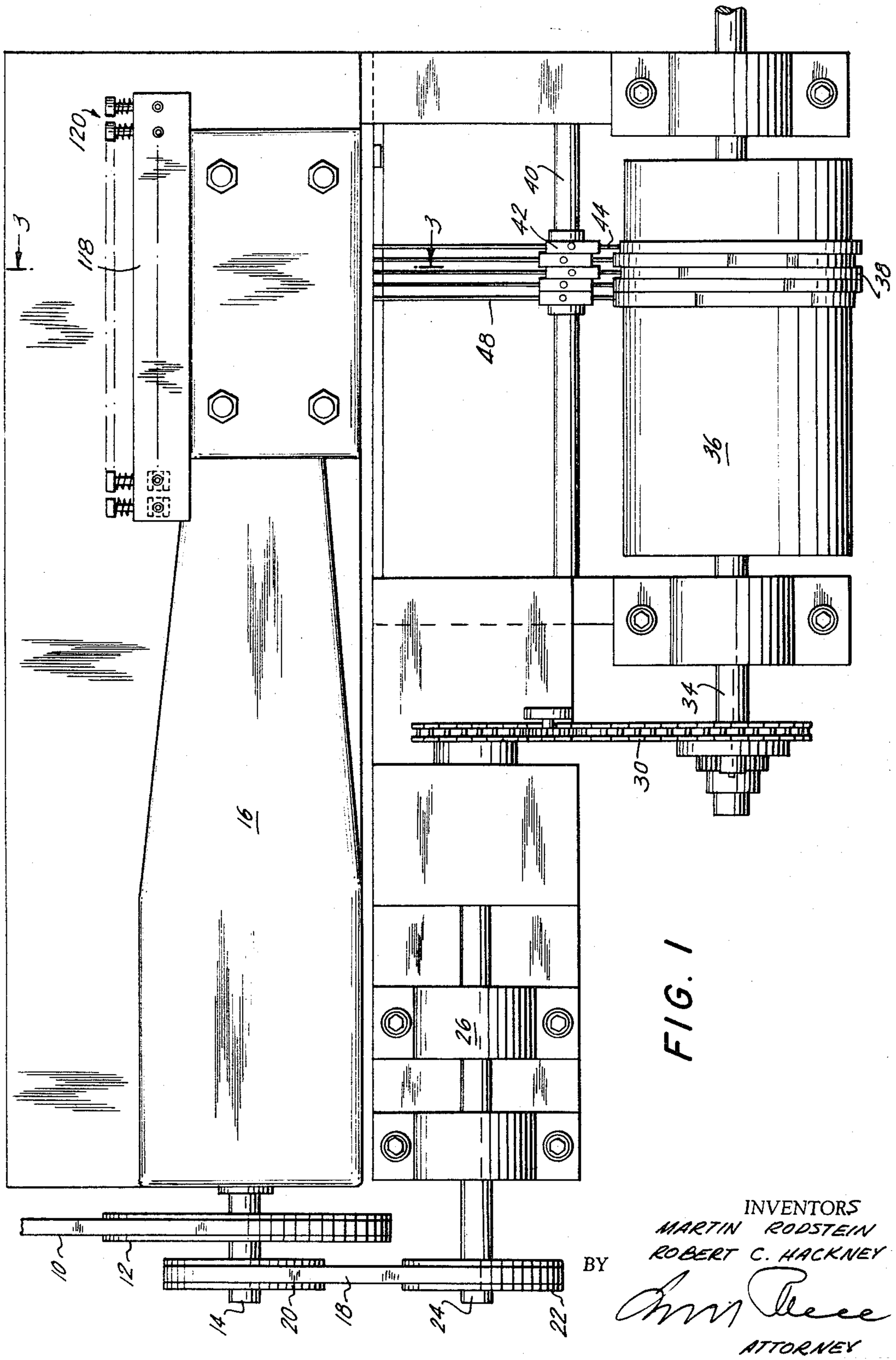

FIG. 1

INVENTORS
MARTIN RODSTEIN
ROBERT C. HACKNEY

BY

ATTORNEY

Sept. 24, 1968 M. RODSTEIN ET AL 3,402,686

TUFTING MACHINE

Filed Sept. 11, 1967 6 Sheets-Sheet 2

FIG. 2

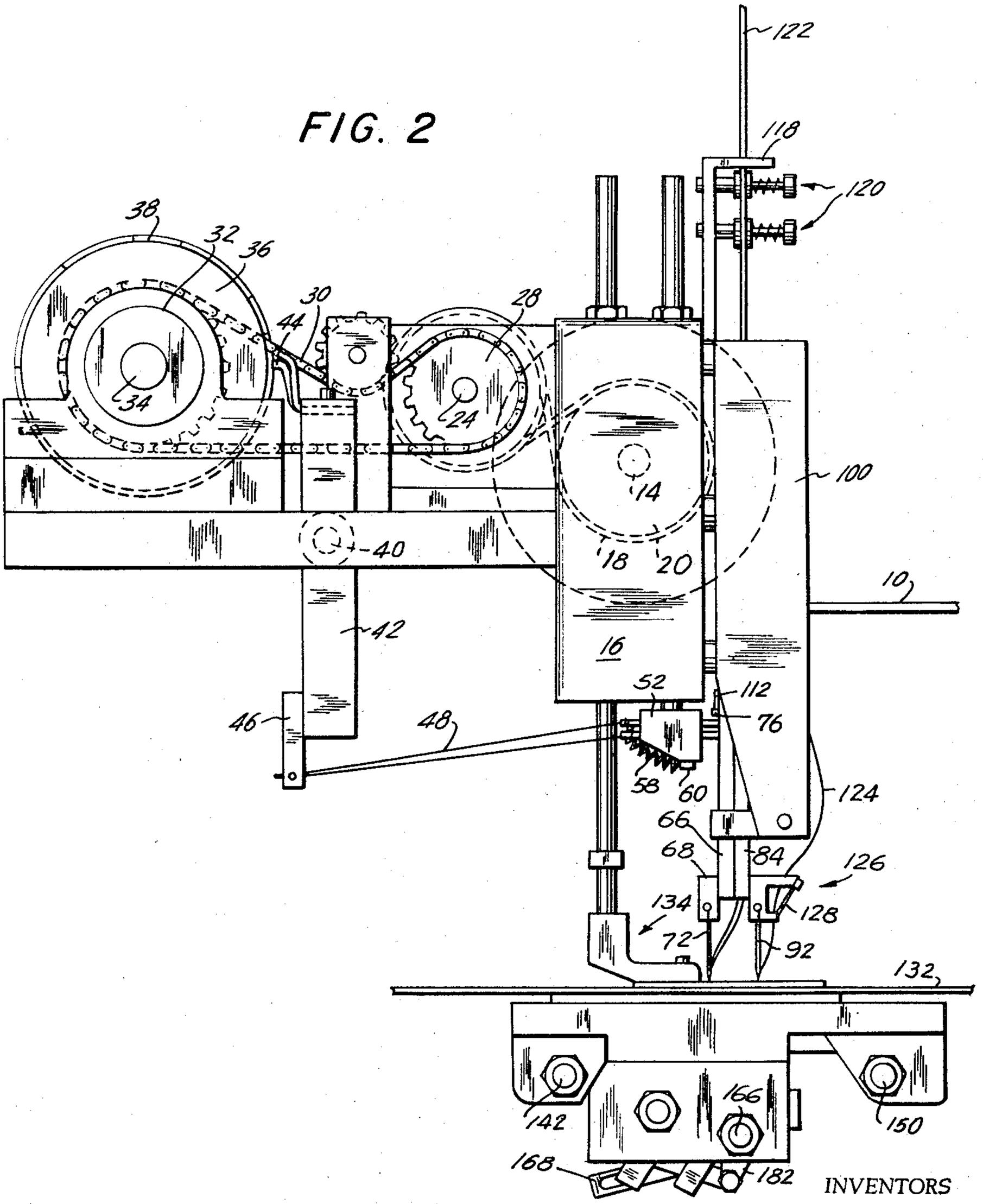

INVENTORS
MARTIN RODSTEIN
ROBERT C. HACKNEY

BY

ATTORNEY

Sept. 24, 1968 M. RODSTEIN ET AL 3,402,686

TUFTING MACHINE

Filed Sept. 11, 1967 6 Sheets-Sheet 3

FIG. 3

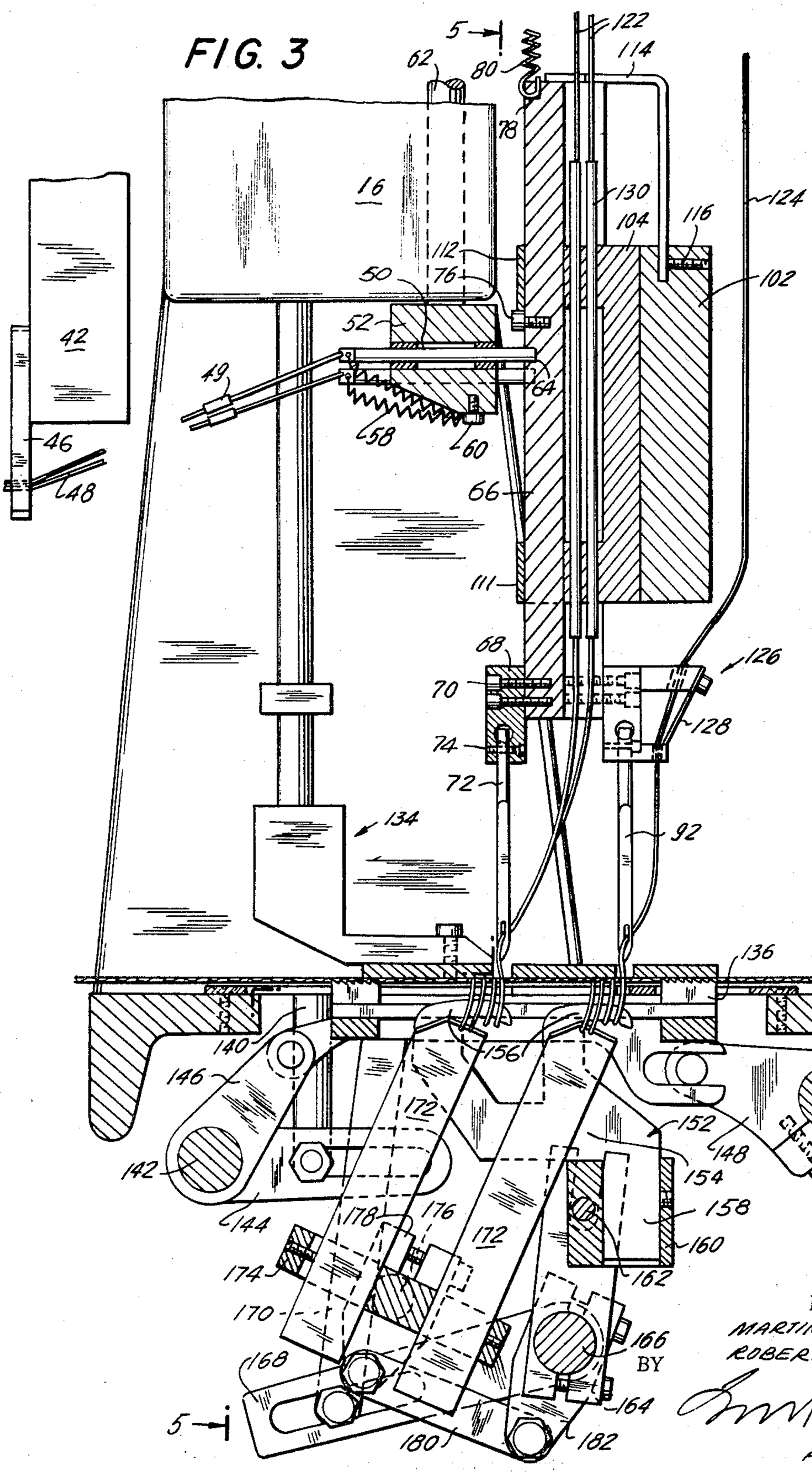

INVENTORS
MARTIN RODSTEIN
ROBERT C. HACKNEY
BY
ATTORNEY

Sept. 24, 1968 M. RODSTEIN ET AL 3,402,686

TUFTING MACHINE

Filed Sept. 11, 1967 6 Sheets-Sheet 4

FIG. 4

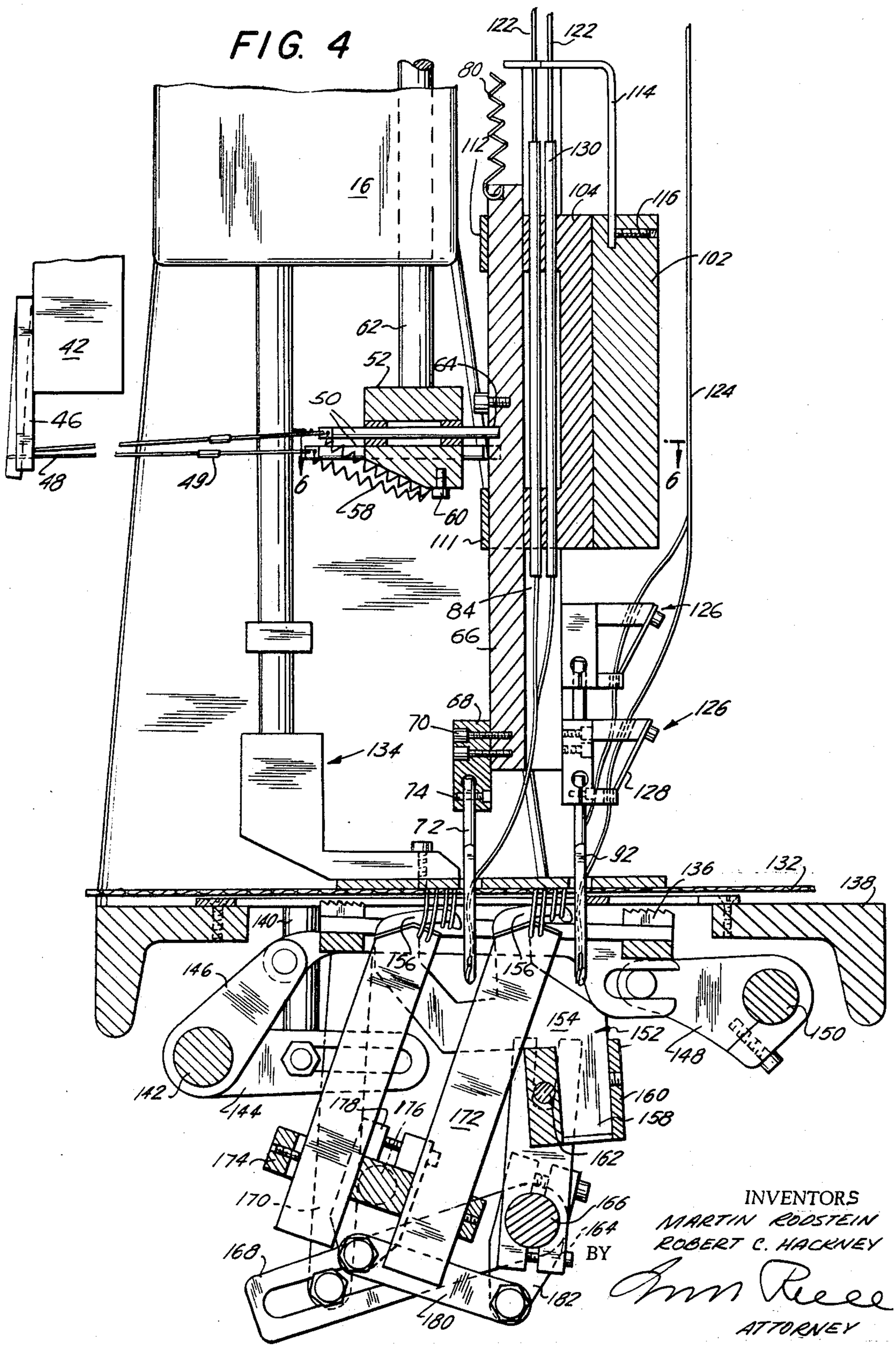

INVENTORS
MARTIN RODSTEIN
ROBERT C. HACKNEY
BY
ATTORNEY

Sept. 24, 1968 M. RODSTEIN ET AL 3,402,686

TUFTING MACHINE

Filed Sept. 11, 1967 6 Sheets-Sheet 5

FIG. 5

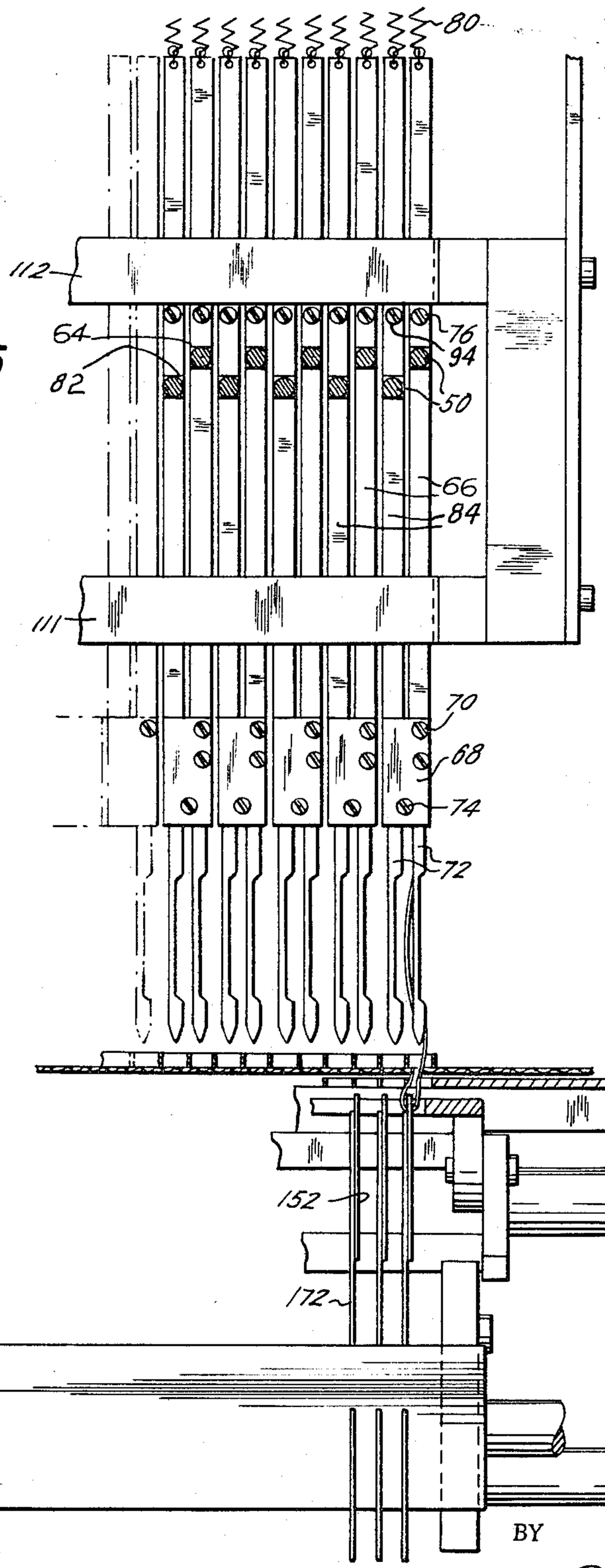

INVENTORS
MARTIN RODSTEIN
ROBERT C. HACKNEY

BY

ATTORNEY

Sept. 24, 1968 M. RODSTEIN ET AL 3,402,686

TUFTING MACHINE

Filed Sept. 11, 1967 6 Sheets-Sheet 6

FIG. 6

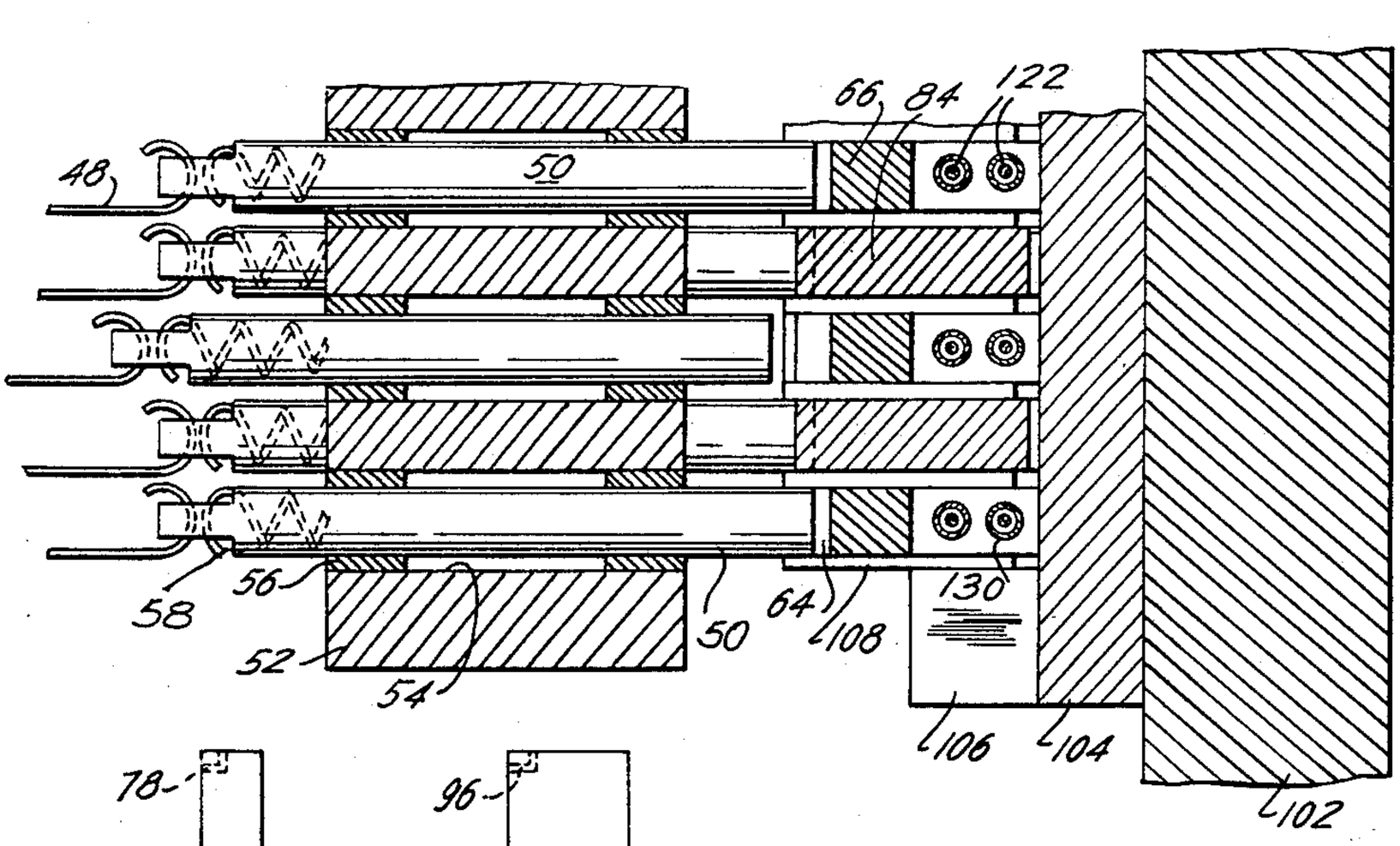

FIG. 7

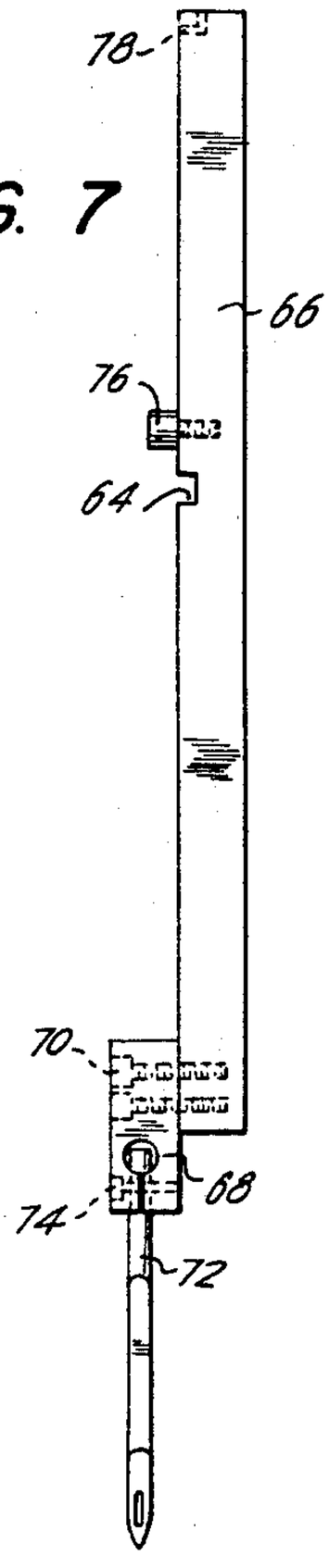

FIG. 8

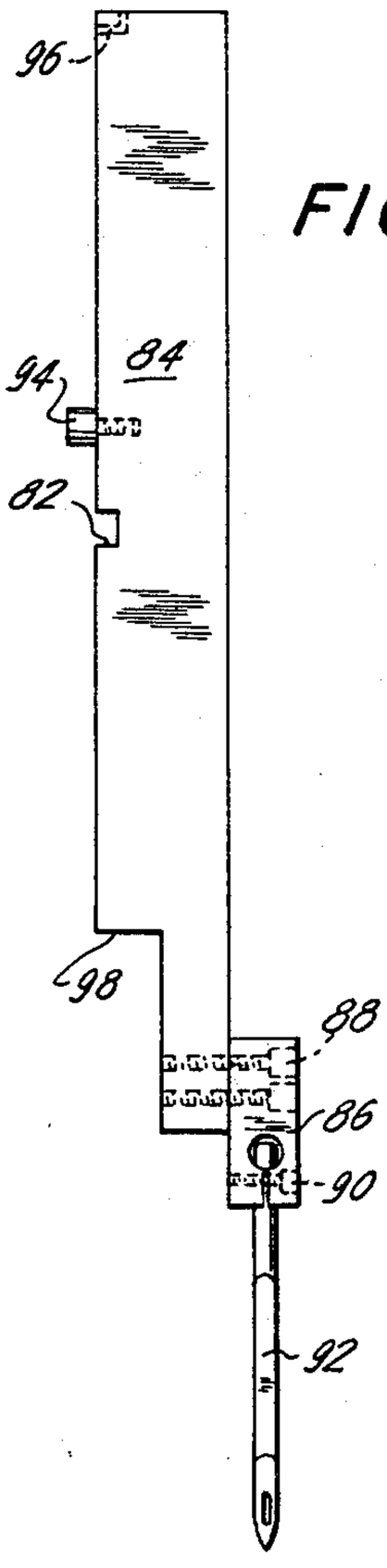

FIG. 9

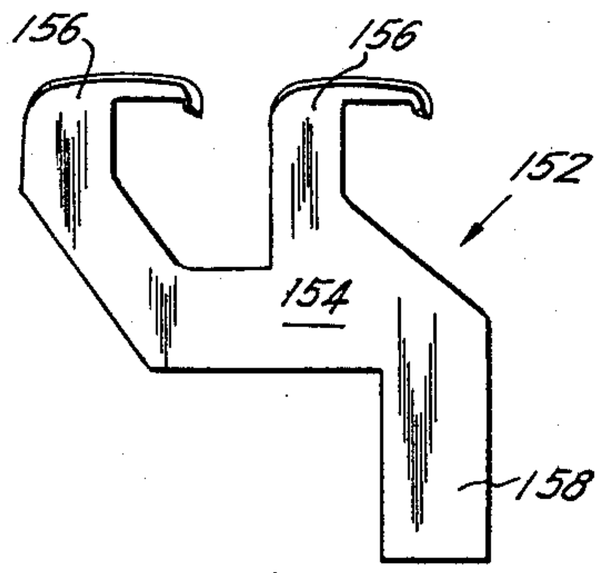

INVENTORS
MARTIN RODSTEIN
ROBERT C. HACKNEY

BY

ATTORNEY

United States Patent Office

3,402,686

Patented Sept. 24, 1968

3,402,686

TUFTING MACHINE

Martin Rodstein and Robert C. Hackney, Dalton, Ga., assignors to Carolyn Chenilles, Inc., New York, N.Y., a corporation of Delaware

Filed Sept. 11, 1967, Ser. No. 667,630
10 Claims. (Cl. 112—79)

ABSTRACT OF THE DISCLOSURE

The present disclosure describes a tufting machine in which there are two rows of needles, each having separate control means, which control means will give a predetermined pattern of tufts during the tufting operation.

Description of the invention

The present invention relates to textiles and particularly to textile machines.

The invention deals in particular with machines which are adapted to form chenille fabrics. As is well known, chenille fabrics take the form of pile yarns which are connected with a suitable backing. It is conventional to manufacture such fabrics by looping yarns through the backing after which the loops can be cut so as to form the pile. The needles which form the loops are controlled in such a way that the pile takes a predetermined pattern on the backing, and in this way the conventional chenille fabrics are formed.

Although machines are known at the present time for providing fabrics of the above type, these known machines have several drawbacks. For example, the patterns which can be achieved are relatively coarse because of the limitations with respect to the spacing of the needles which form the loops. Thus, at the present time it is not possible to locate the loop-forming needles very close to each other so that as a result only relatively coarse chenille patterns can be achieved.

It is accordingly a primary object of the present invention to provide a machine capable of manufacturing chenille fabrics in such a way that they can be provided with any desired pattern which has in it a far finer degree of detailing than has heretofore been possible.

In particular, it is an object of the invention to provide a machine of the above type which can have the needles thereof located in far closer proximity than has heretofore been possible.

In particular, it is an object of the invention to provide a machine of the above type with a plurality of rows of needles wherein the needles of the individual rows can be precisely controlled to provide a selected pattern even though the needles of each row are located in close proximity to each other and the two rows of needles are also located in close proximity to each other.

Furthermore, it is an object of the invention to provide a machine of the above type which can have all of the needles controlled from a single pattern drum as a result of a novel transmission of the invention between the pattern drum and the needle-carrying bars.

Moreover, it is an object of the invention to provide a machine which while capable of accomplishing the above objects nevertheless is composed of relatively simple rugged elements which operate very reliably.

Furthermore, it is an object of the invention to provide a machine of the above type which can be very easily controlled by persons skilled in the art without requiring the operator of the machine to learn new techniques, so that an experienced operator of a known chenille manufacturing machine can operate the machine of the invention without any difficulty.

Still further objects and advantages will appear in the more detailed description set forth below, it being understood, however, that this more detailed description is given by way of illustration and explanation only and not by way of limitation, since various changes therein may be made by those skilled in the art without departing from the scope and spirit of the present invention.

Primarily, with the machine of the invention there is provided a pair of elongated rows of needles which are located in close proximity to each other and which has the two rows of needles also located in close proximity to each other.

A first reciprocating means is connected to one of the rows of needles for reciprocating the latter and a second reciprocating means is connected to the other of the rows of needles for reciprocating the latter, and a first control means cooperates with the first reciprocating means for controlling the latter to reciprocate the selected needles of the first row while a second control means cooperates with the second reciprocating means for controlling the latter to reciprocate selected needles of the second row, so that in this way a predetermined pattern of loops can be achieved when the needles form loops in a well known manner through a suitable backing.

Brief description of drawings

With the foregoing and other objects in view, the invention consists of the novel construction, combination and arrangement of parts as hereinafter more specifically described, and illustrated in the accompanying drawings, wherein is shown an embodiment of the invention, but it is to be understood that changes, variations and modifications can be resorted to which fall within the scope of the claims hereunto appended.

In the drawings wherein like reference characters denote corresponding parts throughout the several views:

FIG. 1 is a fragmentary top plan view showing that part of a machine which includes the structure of the present invention.

FIG. 2 is an end view of the machine of FIG. 1 as seen from the right thereof.

FIG. 3 is a transverse section of the machine of FIG. 1, taken along line **3—3** of FIG. 1 in the direction of the arrows and showing th estructure on a scale larger than that of FIG. 1.

FIG. 4 shows the structure of FIG. 3 in a position of the parts different from that illustrated in FIG. 3.

FIG. 5 is a fragmentary partly sectional elevation taken along line **5—5** of FIG. 3 in the direction of the arrows.

FIG. 6 is a fragmentary sectional plan view taken along line **6—6** of FIG. 4 in the direction of the arrows and showing the structure on a scale larger than that of FIG. 4.

FIG. 7 is a side elevation of one of the needle-carrying bars of the machine of the invention.

FIG. 8 is a side elevation of another of the needle-carrying bars of the invention.

FIG. 9 is a side elevation of one of the loopers which cooperates with aligned needles of the two rows.

Referring now to FIG. 1, there is fragmentarily illustrated therein a belt **10** which delivers the drive to the machine of the invention from any suitable source such as a motor-driven pulley. The belt **10** drives a pulley **12** fixed to a rotary shaft **14** which drives a known mechanism within a housing **16** which is supported on suitable standards so as to be situated at the porper elevation. In addition, the drive is transmitted by way of a belt **18** from a pulley **20** fixed to the shaft **14** to a second pulley **22** fixed to the shaft **24** so as to rotate the latter. This shaft **24** is supported for rotation by suitable bearings **26**.

As is shown most clearly in FIG. **2**, the shaft **24** also

fixedly carries a sprocket wheel **28** which serves to drive a chain **30**. The chain **30** transmits the drive to a sprocket wheel **32** which is fixedly mounted on a shaft **34** also supported for rotation by suitable bearings, and the shaft **34** carries the pattern drum **36** on which a selected series of cams **38** are fixed in a well known manner.

The frame of the machine also carries a stationary horizontal shaft **40** on which a plurality of levers **42** are pivotally mounted in side by side relation, and the top ends of the levers **42** fixedly carry cam-follower fingers **44** respectively aligned with and cooperating with the cams **38** of the pattern drum **36**.

The levers **42** fixedly carry at their bottom ends a plurality of releasable fastening brackets **46** which respectively serve to connect to the levers **42** elongated connecting elements **48** in the form of suitable wires, for example.

The plurality of elongated connecting elements **48** which are respectively connected at one end with the levers **42** are hooked at their other ends onto a plurality of elongated pins **50**, respectively, as shown most clearly in FIG. 6. These pins **50** are carried by an elongated drive member **52** in the form of an elongated block formed with a row of horizontal bores **54** passing therethrough in the manner shown most clearly in FIG. 6. Each bore **54** carries a pair of bearings **56** in which a pin **50** is slidable, and a plurality of springs **58** (FIGS. 3 and 4) are respectively connected at one end to the pins **50** and at their opposite end to stationary members **60** which fasten the springs to the drive member **52**, so that in this way the springs **58** form a spring means urging the pins **50** to the right, as viewed in FIG. 6. The elongated drive member **52** is fixed with a plurality of rods **62** which extend through the housing **16** and which are acted upon by a known mechanism which functions during every operating cycle to lower and raise the rods **62** and the block **52** therewith, so that during each operating cycle the entire series of pins **50** is lowered together with the block **52**.

As is apparent from FIGS. 3 and 6, the pins **50** are arranged so as to form an upper row and a lower row, so that in this way the bores **54** can be staggered and spaced quite close to each other along the length of the machine. In other words if the bores **54** and the sleeves **56** were all located in a common plane, then in the horizontal plan of FIG. 6 the several pins **50** would have to be spread further apart from each other. However, by staggering the successive bores it is possible to locate the pins within a space whose dimension in a direction perpendicularly of the pins is much less than would be required if all of the pins were in a common plane. Of course, all of the pins are slidably mounted for longitudinal reciprocating movement, in the manner shown in FIG. 6.

The upper row of pins **50** shown in FIG. 6 are respectively adapted to enter into notches **64** respectively formed in elongated driven members **66** in the form of elongated and needle-carrying bars one of which is shown in detail in FIG. 7. Thus, as may be seen from FIG. 7 each bar **66** carries at its lower end a needle-supporting bracket **68** fastened to the bar **66** by screws **70**, and the bracket **68** of each bar **66** carries a pair of needles **72** releasably fastened to the bracket **68** by a screw **74**, as is particularly apparent from FIG. 5. Therefore, the series of elongated bars **66** form a reciprocating means for reciprocating the row of needles **72** which are connected in pairs respectively to the bars **66**.

The several bars **66** respectively carry stop screws **76** which limit their upward movement in a manner described in greater detail below. In addition, the bars **66** are formed at their upper ends with suitable openings **78** for receiving the bottom ends of springs **80** which urge the bars **66** upwardly to predetermined starting positions.

The lower row of pins **50** are respectively adapted to enter into a plurality of notches **82** which are respectively formed in a plurality of elongated needle-carrying bars **84** which are situated beside and alternate with the bars **66**. One of the bars **84** is shown in detail in FIG. 8. Each bar **84** carries as its lower end a needle-supporting bracket **86** fixed to the bar **84** by screws **88**. Each bracket **86** carries a screw **90** for releasably fixing the bracket **86** and a pair of needles **92** which are respectively aligned with a pair of needles **72**, so that in this way two parallel rows of needles **72** and **92** are provided with the needles of one row respectively aligned with the needles of the other row. The needles of each row are located quite close to each other, as is apparent from FIG. 5 which shows the row of needles **72**. Behind each of the needles **72** shown in FIG. 5 is a needle **92**, so that with the machine of the invention it is possible to situate a large number of needles in the small space. The several bars **84** form a reciprocating means for reciprocating the row of needles **92**. These bars **84** are of course wider than the bars **66**, as is apparent from a comparison of FIGS. 7 and 8.

The bars **84** have left end faces, as viewed in FIG. 6, which are situated in a plane common with the left end faces of the bars **66** of FIG. 6, so that all of the bars have outer rear faces located in a common plane, and it is the wider bars **84** which extend forwardly beyond the narrower bars **66**. The bars **84** carry a plurality of stop screws **94** which are adapted to cooperate with a stop member which extends across all of the bars in a manner described below. In addition the bars **84** are formed at their upper ends with openings **96** for receiving the bottom ends of springs **80** which also serve to yieldably maintain the bars **84** in upper starting positions.

As is particularly apparent from FIG. 5, each of the brackets **68** extends to the left beyond the bar **66** on which it is mounted into overlapping relation with the adjoining bar **84**, and for this purpose the lower rear end portion of each bar **84** is formed with a notch **98** (FIG. 8) for receiving the bracket **68**. In this way the several brackets **68** can be located quite close to each other so as to be able to carry a pair of pins spaced from each other by a distance greater than the thickness of the bar **66**. In the same way, each bar **84** carries at its front face the bracket **86** which extends beyond the bar **84** into overlapping relation with the next bar **66**.

Thus, as viewed in FIG. 5, while each bracket **68** extends from the bar **66** on which it is mounted to the left into the notch **98** of the next bar **84**, each bracket **86** extends from the front face of the bar **84**, on which it is mounted to the right, as viewed in FIG. 5, into overlapping relation with the adjoining bar **66**.

As is apparent from FIG. 2, an elongated housing **100** is situated in front of the housing **16** for the drive mechanism, and it is this housing **100** which accommodates the structure which carries the bars **66** and **84**. This frame structure includes, within the housing **100**, a front support **102** maintained stationary in any suitable way and carrying an elongated support member **104** of channel-shaped configuration having upper and lower rearwardly directed ribs **106**. These ribs carry a series of rearwardly directed plates **108** which are relatively thin and which define between themselves the spaces in which the several bars **84** and **66** are guided for sliding vertical movement. Thus, the plates **108** are quite thin and serve to slidably guide the several needle-carrying bars **66** and **84** for vertical reciprocating movement. Each of the ribs **106** fixedly carries a series of plates **108** which are fixed to the ribs **106** in any suitable manner. The lower rib **106** in addition has at its outer ends a pair of plates to which a lower guide bar **111** is fixed for engaging the rear faces of all of the reciprocating needle-carrying bars **66** and **84**, and the upper rib in the same way carries a rear plate **112**.

The rear plate **112** extends across and then slidably engages all of the bars **66** and **84** at their rear outer faces. It is the lower edge of the bar **112** which forms a stop

edge for the several stop screws **76** and **94**, as is particularly apparent from FIG. 3.

In addition to the stop formed by cooperation of the bar **112** with the various screws **76** and **94**, the frame member **102** fixedly carries, as indicated in FIG. 4, a plurality of stop members **114** fixed in position by a plurality of set screws **116** and engaging the top ends of the bars when they are in their upper initial positions, as shown in FIG. 3.

Yarn guide **118** are mounted alongside the housing **16**, as indicated in FIG. 2, and the structure which carries the guides **118** also carries conventional yarn tensioners **120** which serve to tension the several yarns **122** which pass through the rear row of needles **72**. The machine also has a series of yarns **124** which are guided through any suitable eyes or the like so as to pass through the yarn tensioners **126** into the eyes of the needles **92**, as shown most clearly in FIGS. 3 and 4. These several yarn tensioners **126** are directly carried by the brackets **86** and include springy plates **128** which engage and press against the yarns **124**, respectively, so as to tension the latter. Of course a pair of yarns **124** cooperate with each tensioner **126** before passing through the pair of needles **92** carried by the bracket **86**. In the same way a pair of yarns **122** are acted upon by a pair of tensioners **120** before reaching the pair of needles **72** carried by each bracket **68**.

As is shown most clearly in FIGS. 3 and 4, the frame member **104** carries a pair of yarn-guiding tubes **130** situated behind each bar **66** and serving to guide the pair of yarns **122** downwardly to the pair of needles **72** carried by each bracket **68**.

In order to form a chenille pattern the several needles **72** and **92** are reciprocated through any suitable backing such as the layer of fabric **132** indicated in FIGS. 3 and 4. This backing layer is acted upon in a known way by a presser foot assembly **134**, and a feed dog mechanism **136** is provided for feeding the backing material **132** also in a known way. Beneath the bed **138** of the machine is situated the several transmissions which are acted upon by the drive mechanism within the housing **16**. These transmissions include, for example, the bar **140** which is vertically reciprocated and serves to oscillate a shaft **142** back and forth about its axis. This shaft is fixed to levers **144** which are in turn linked to the structure which carries the feed dog mechanism **136** whose movement is controlled not only by the levers **144** but also by the levers **148** which are mounted for rocking movement on a shaft **150**, so that in this way the dogs will carry out the necessary up and down as well as forward and reverse movement, as well known in the art.

As was indicated above, situated behind each needle **92** of the front row is a needle **72** of the back row, so that in this way the two rows of needles have aligned pairs of needles one of which is situated in front of the other, and with each pair of these front and rear aligned needles is associated a looper **152**, one of which is shown in FIG. 9. Each looper is in the form of a plate **154** having at its upper end a pair of looping portions **156** which respectively cooperate with the forwardly and rearwardly aligned pair of needles, and at its front end each looper **152** has a depending lug **158** by which it is mounted on a block **160**. This block **160** is carried by a rod **162** received in notches formed in levers **164** which are clamped onto an oscillatory shaft **166** which is oscillated back and forth about its axis by a lever **168** also fixed to the shaft **166** which is supported for rotation about its axis in any suitable bearings. Lever **168** is formed with a slot in which is received a pin connected to a reciprocating bar **170** which is reciprocated by the mechanism in the housing **16** in a manner well known in the art, so that in this way the loopers **52** all move through endless paths during each cycle enabling the looping portions **156** to enter into a loop formed by a needle during its downward movement and to hold onto this loop as the needle moves back up through the backing **132**. In this way successive loops are formed and held by the loopers **152**.

Situated beside and slidably engaging the loopers **152** are pairs of knives **172**. Each pair of knives is mounted in a block **174** carried by a shaft **176** to which a lever **178** is clamped. The lever **178** is pivotally connected to a link **180** which is in turn pivotally connected to a second lever **182** clamped onto the shaft **166**, so that as the shaft **166** is oscillated about its axis during reciprocation of the bar **170** in the manner described above, not only do the loopers **152** move through endless paths, but in addition the knives **172** are actuated so as to slide with respect to the loopers. These knives have upper cutting edges which serve to slice through the lower ends of the loops so as to form separate pile yarns therefrom, as is apparent from FIGS. 3 and 4.

The manner in which the above-described structure operates is believed to be clear. During each operating cycle the feed dogs will feed the backing **132** by a suitable increment and selected needles will be reciprocated downwardly through and back up out of the backing **132**, forming beneath the backing loops which are engaged by the looping portions **156** of the loopers **152**. These retained loops are subsequently severed by the knives **172**.

Moreover, not all of the needles **72** and **92** will pass downwardly through the fabric backing. The combination of pattern cams **38** by the pattern drum **36** will determine which needles are actuated during one revolution of the drum **36**. During this one revolution of the drum the needles will of course be reciprocated through a relatively large number of operating cycles.

In this way it is possible to achieve during each revolution of the pattern drum a predetermined pattern of the pile which forms the chenille, and this pattern will of course repeat itself during the successive revolutions of the pattern drum.

Of course, during each operating cycle the needles which are automatically selected by the cams of the pattern drum will be lowered and raised. This action is brought about by the lowering and raising of the block or drive member **52** at each operating cycle as was pointed out above. Those needles which are not to be reciprocated during a given operating cycle will have their pins **50** drawn out of their notches because at this time raised portions of the pattern cams will engage the fingers of the levers **42** turning the latter in a clockwise direction, as viewed in FIGS. 2–4, so as to withdraw from the notches of the needle-carrying bars those pins which are connected with levers which have been turned by engagement of the cam follower fingers with raised portions of the cams. Therefore, only those pins **50** which can be maintained by the springs **58** in notches of the needle-carrying bars will transmit the vertical movement of the drive member **52** to the driven members which are formed by the needle-carrying bars **66** and **84**. Therefore the spring means formed by the springs **80** will maintain in a raised initial position those bars **66** and **84** whose pins **50** have been pulled out of their notches by the cams of the pattern drum, and in this way it is only preselected needles which will move down through the fabric. Of course these needles will move up and down in pairs, and separate pairs of yarns are provided for the pairs of needles respectively connected to the several bars **66** and **84**.

Because of the arrangement of the bars and needle-carrying structure of the invention, it is possible to achieve with the structure of the invention a very fine detail in the pattern which heretofore could not be achieved. This result is brought about by the above-described arrangement according to which the two rows of needles are actuated by two sets of bars **66** and **84** which while they alternate with each other nevertheless are capable of carrying the brackets **68** and **86** which can arrange the needles in pairs quite close to each other in each row.

Each connecting element **48** can be adjusted by a turn-

buckle **49**, as diagrammatically indicated in FIGS. 3 and 4.

As many changes could be made in the above tufting machine, and many widely different embodiments of this invention could be made without departure from the scope of the claims, it is intended that all matter contained in the above description shall be interpreted as illustrative and not in a limiting sense.

Having now particularly described and ascertained the nature of the invention, and in what manner the same is to be performed, what is claimed is:

1. In a chenille fabric manufacturing machine in which chenille patterns are formed on a suitable backing, a first row of needles for passing through the backing to loop yarns thereon, a second row of needles parallel and adjacent to said first row also for looping yarns onto the backing, said first and second rows of needles being one behind the other in the direction of travel of said backing, first and second vertically elongated axially reciprocating means respectively connected operatively to said first and second rows of needles for reciprocating the latter, said first and second reciprocating means having rear outer faces located in a common vertical plane, and separate unconnected first and second control means respectively being directly connected into said outer faces of said first and second reciprocating means for controlling the latter to provide a predetermined sequence of operation of selected needles which will provide a given pattern of yarn attached by said needles to the backing said first and second control means driving said first and second reciprocating means, respectively.

2. In a machine as recited in claim **1**, said reciprocating means including a plurality of driven members respectively connected operatively to said needles of said first and second rows for driving said needles, and a plurality of driving members respectively provided for said driven members for driving the latter, said control means being operatively connected with said driving and driven members to control the connection therebetween, said control means maintaining a connection between driving members and those driven members which are connected with needles which are to be actuated and eliminating a connection between those driving members and their cooperating driven members whose needles are not to be reciprocated, so as to achieve a predetermined pattern.

3. In a machine as recited in claim **2**, said driven members respectively being in the form of elongated bars respectively carrying said needles, and guide means guiding said bars for longitudinal movement.

4. In a machine as recited in claim **3**, the bars which are operatively connected with the needles of one of said rows, respectively, respectively alternating with and situated beside the bars which are respectively connected to the needles of the other of said rows.

5. In a machine as recited in claim **3**, all of said bars

respectively having outer faces respectively formed with notches, a driving member mounted for reciprocation longitudinally of said driven members, and a plurality of motion-transmitting pins respectively carried slidably by said driving member and respectively received in said notches for connecting said driven members to said driving member for movement therewith, said control means acting on said pins to respectively maintain them in said notches or to remove selected pins from their notches.

6. In a machine as recited in claim **5**, spring means operatively connected to said bars for yieldably maintaining the latter at predetermined starting positions so that where pins are not situated in notches of selected bars, the latter selected bars will be maintained by said spring means in their starting positions to prevent operation of the needles connected therewith.

7. In a machine as recited in claim **5**, said control means including a pattern drum respectively having a row of cams arranged with every other one of said cams corresponding to one row of needles and the other alternating cams situated between every other one of said cams corresponding to the other row of needles, a plurality of levers turnable about a common axis and respectively having cam-follower fingers engaging said cams, spring means operatively connected to said pins for urging the latter into said notches, and connecting elements respectively connecting said levers to said pins for pulling the latter out of said notches in opposition to the spring means acting upon said pins when raised portions of said cams engage said fingers to turn said levers.

8. In a machine as recited in claim **1**, said reciprocating means including a plurality of bars respectively carrying said needles, and the needles of one row being aligned with the needles of the other row.

9. In a machine as recited in claim **8**, the bars which carry the needle of one of said rows respectively alternating with the bars which carry the needles of the other of said rows.

10. In a machine as recited in claim **1**, said reciprocating means including a plurality of elongated bars, and each bar carrying a pair of needles so that in each row each successive pair of needles are respectively carried by individual bars.

References Cited

UNITED STATES PATENTS

2,989,014	6/1961	Dedmon	112—79
3,056,364	10/1962	Dedmon	112—79
3,160,125	12/1964	Bryant et al.	112—79
3,172,380	3/1965	Boyles	112—79
3,259,088	7/1966	Rockholt	112—79

HERBERT F. ROSS, *Primary Examiner.*