Sept. 24, 1968 A. J. CHRISTIAN ET AL 3,402,679

RAILWAY CAR TRUCKS

Filed Oct. 23, 1965 11 Sheets-Sheet 1

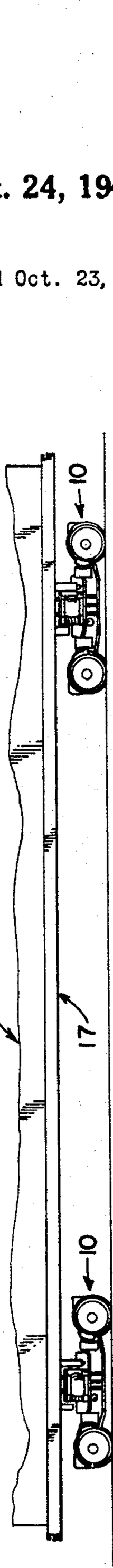

FIG. 1.

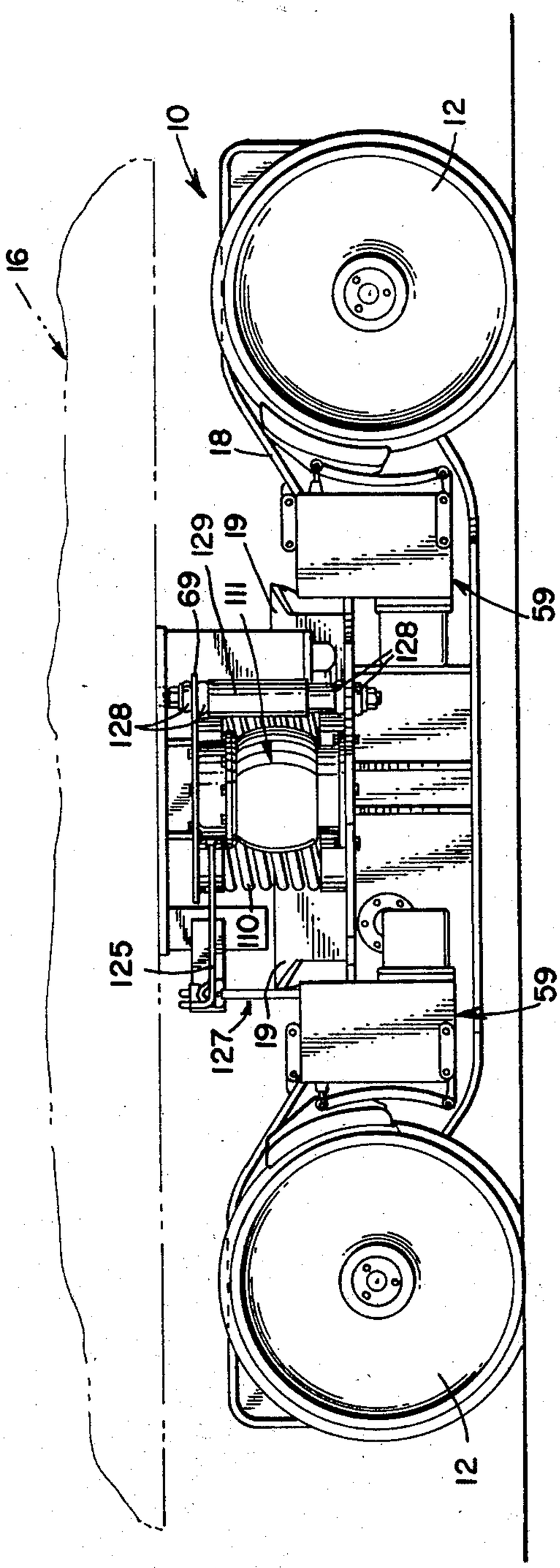

FIG. 2.

INVENTORS
ANDREW J. CHRISTIAN
WILLIAM VAN DER SLUYS
BY Fred P. Kotler
ATT'Y

Sept. 24, 1968 A. J. CHRISTIAN ETAL 3,402,679

RAILWAY CAR TRUCKS

Filed Oct. 23, 1965 11 Sheets-Sheet 2

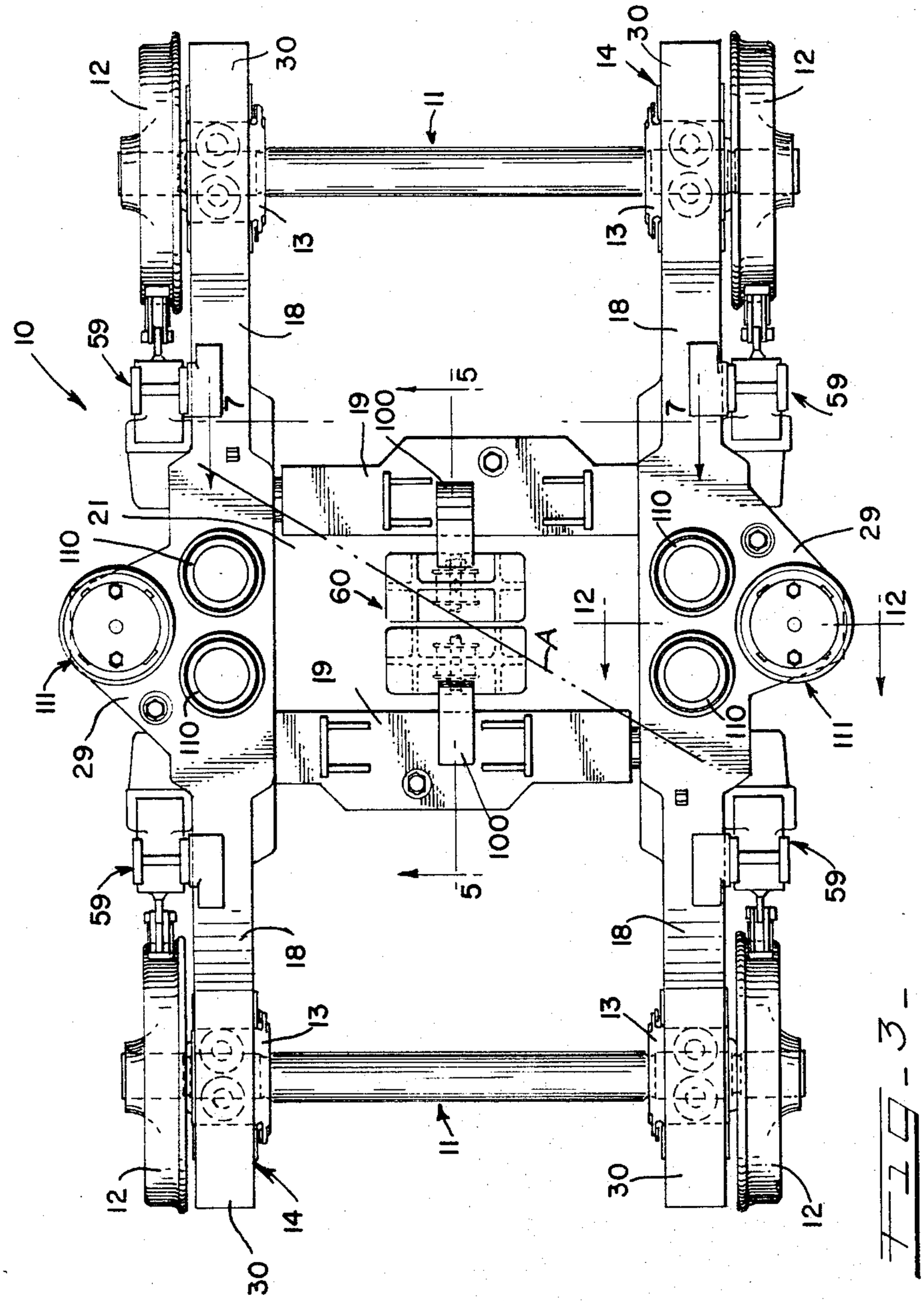

FIG. 3

INVENTORS
ANDREW J. CHRISTIAN
WILLIAM VAN DER SLUYS
BY Fred P. Fowler
ATT'Y

Sept. 24, 1968 A. J. CHRISTIAN ETAL 3,402,679

RAILWAY CAR TRUCKS

Filed Oct. 23, 1965 11 Sheets-Sheet 3

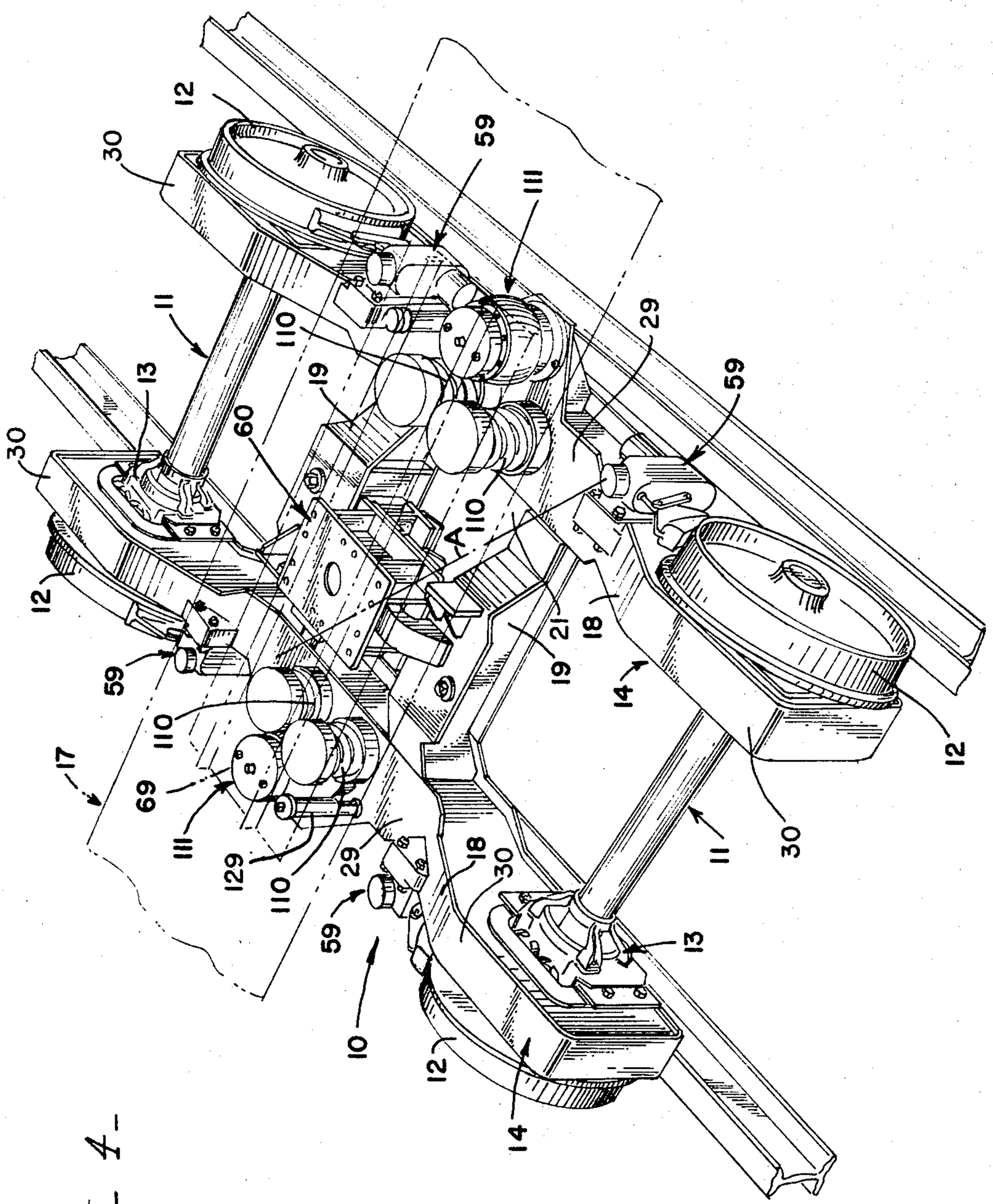

FIG. 4

INVENTORS
ANDREW J. CHRISTIAN
WILLIAM VAN DER SLUYS
BY Fred P. Fostle
ATT'Y

Sept. 24, 1968 A. J. CHRISTIAN ET AL 3,402,679

RAILWAY CAR TRUCKS

Filed Oct. 23, 1965 11 Sheets-Sheet 4

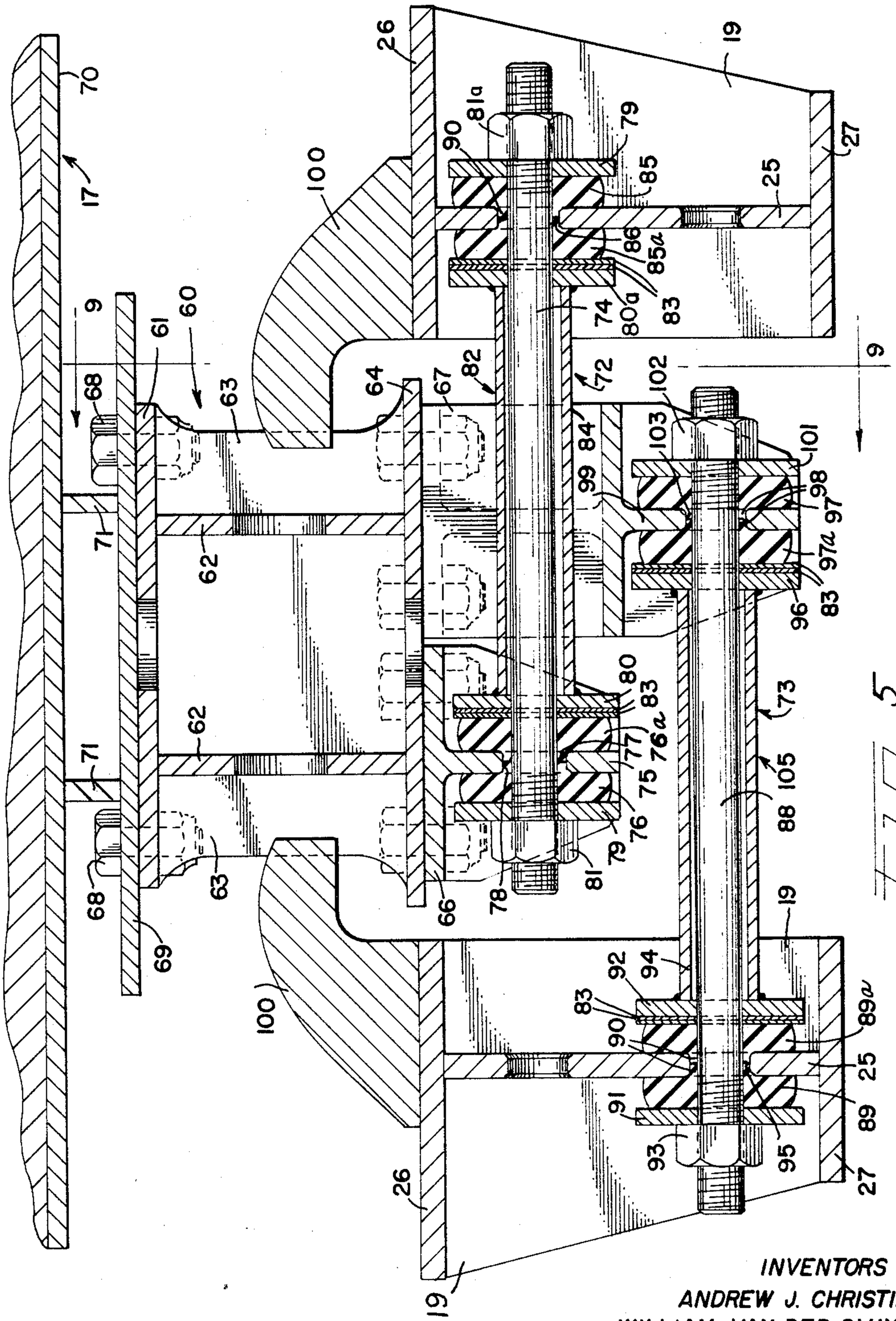

FIG. 5

INVENTORS
ANDREW J. CHRISTIAN
WILLIAM VAN DER SLUYS
BY Fred P. Fortkamp
ATT'Y

Sept. 24, 1968 A. J. CHRISTIAN ETAL 3,402,679

RAILWAY CAR TRUCKS

Filed Oct. 23, 1965 11 Sheets-Sheet 5

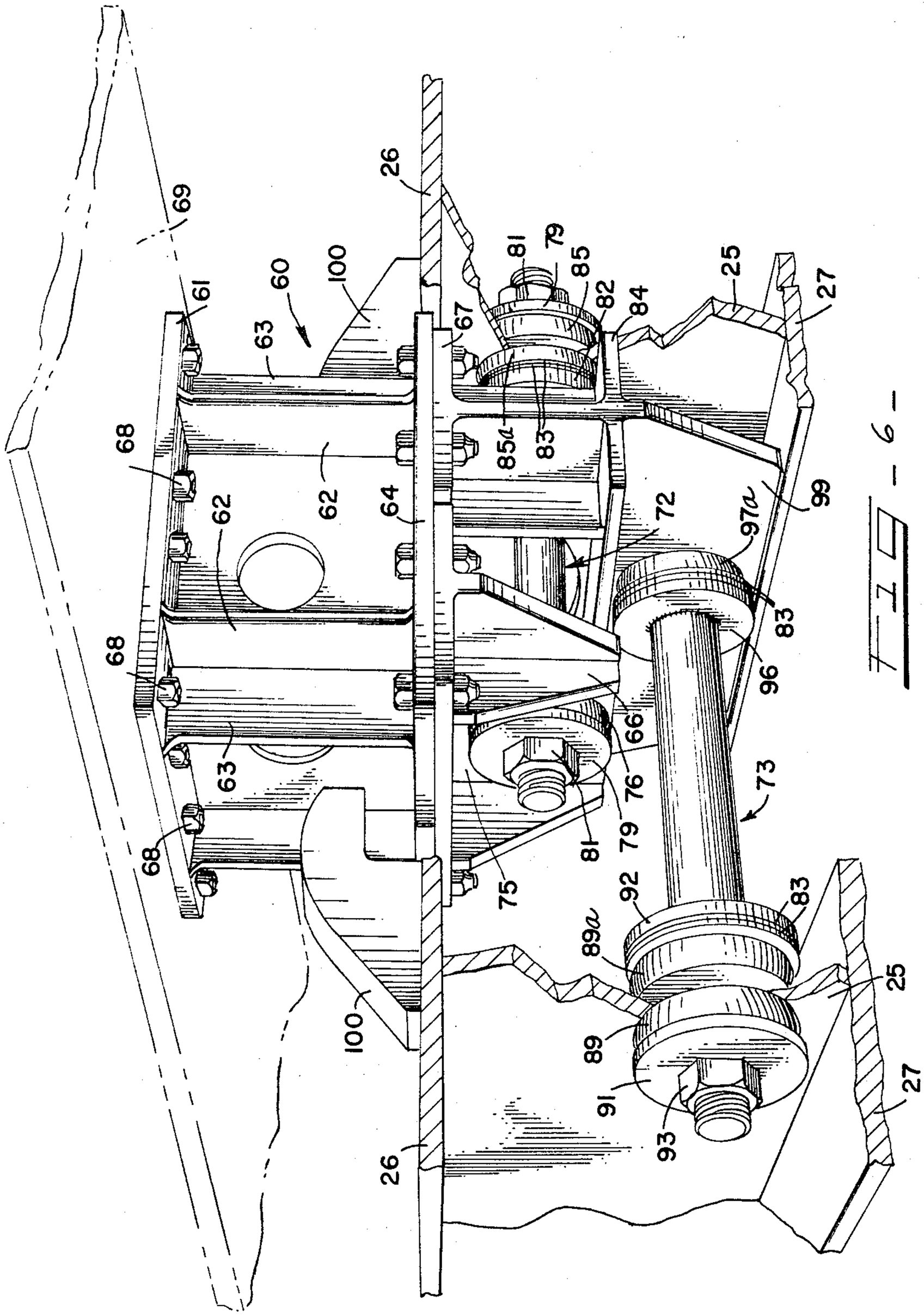

FIG. 9

INVENTORS
ANDREW J. CHRISTIAN
WILLIAM VAN DER SLUYS
BY Fred P. Kostka
ATT'Y

Sept. 24, 1968 A. J. CHRISTIAN ET AL 3,402,679

RAILWAY CAR TRUCKS

Filed Oct. 23, 1965 11 Sheets-Sheet 6

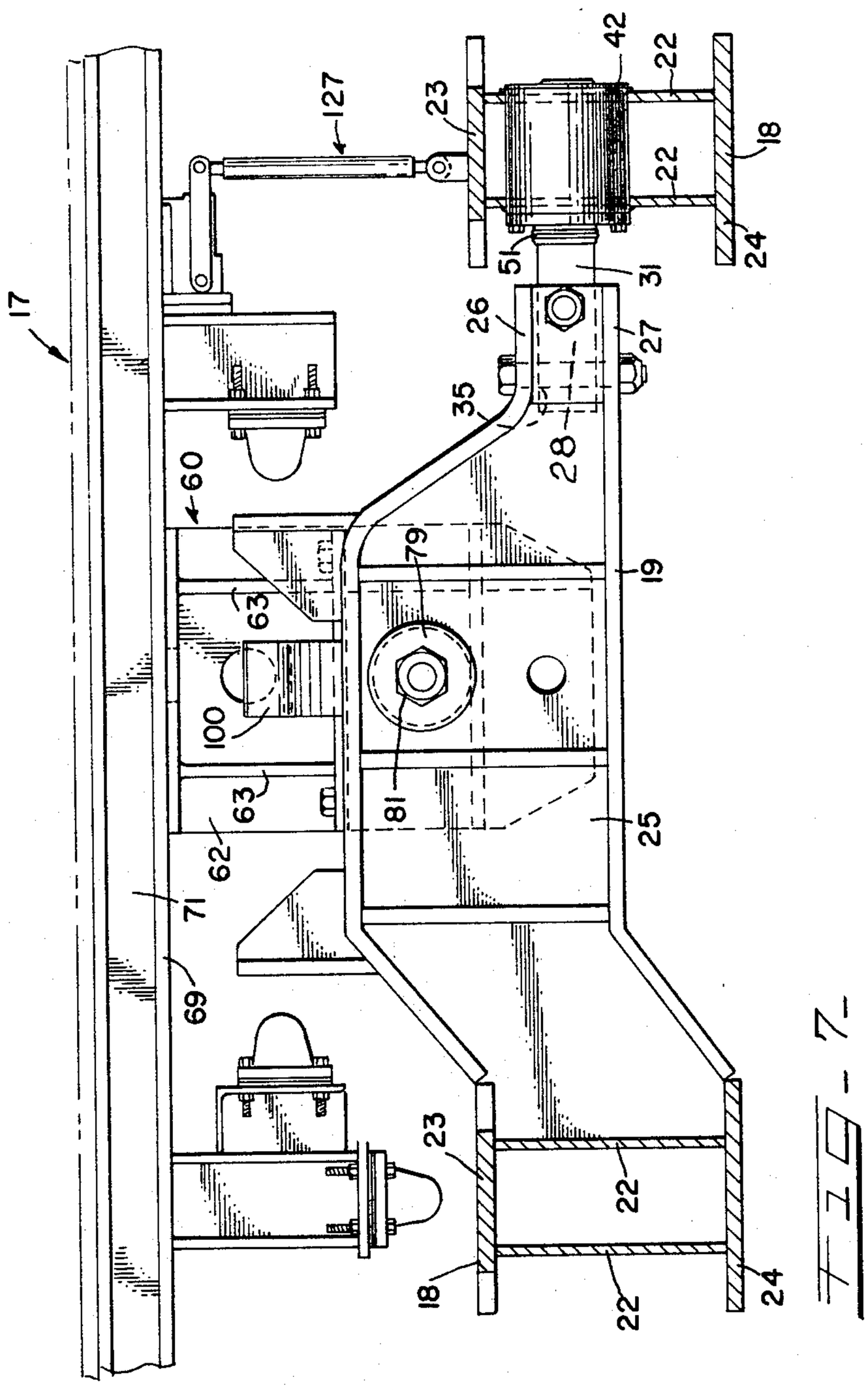

FIG. 7

INVENTORS
ANDREW J. CHRISTIAN
WILLIAM VAN DER SLUYS
BY Fred P. Kostka
ATT'Y

Sept. 24, 1968 A. J. CHRISTIAN ETAL 3,402,679

RAILWAY CAR TRUCKS

Filed Oct. 23, 1965 11 Sheets-Sheet 7

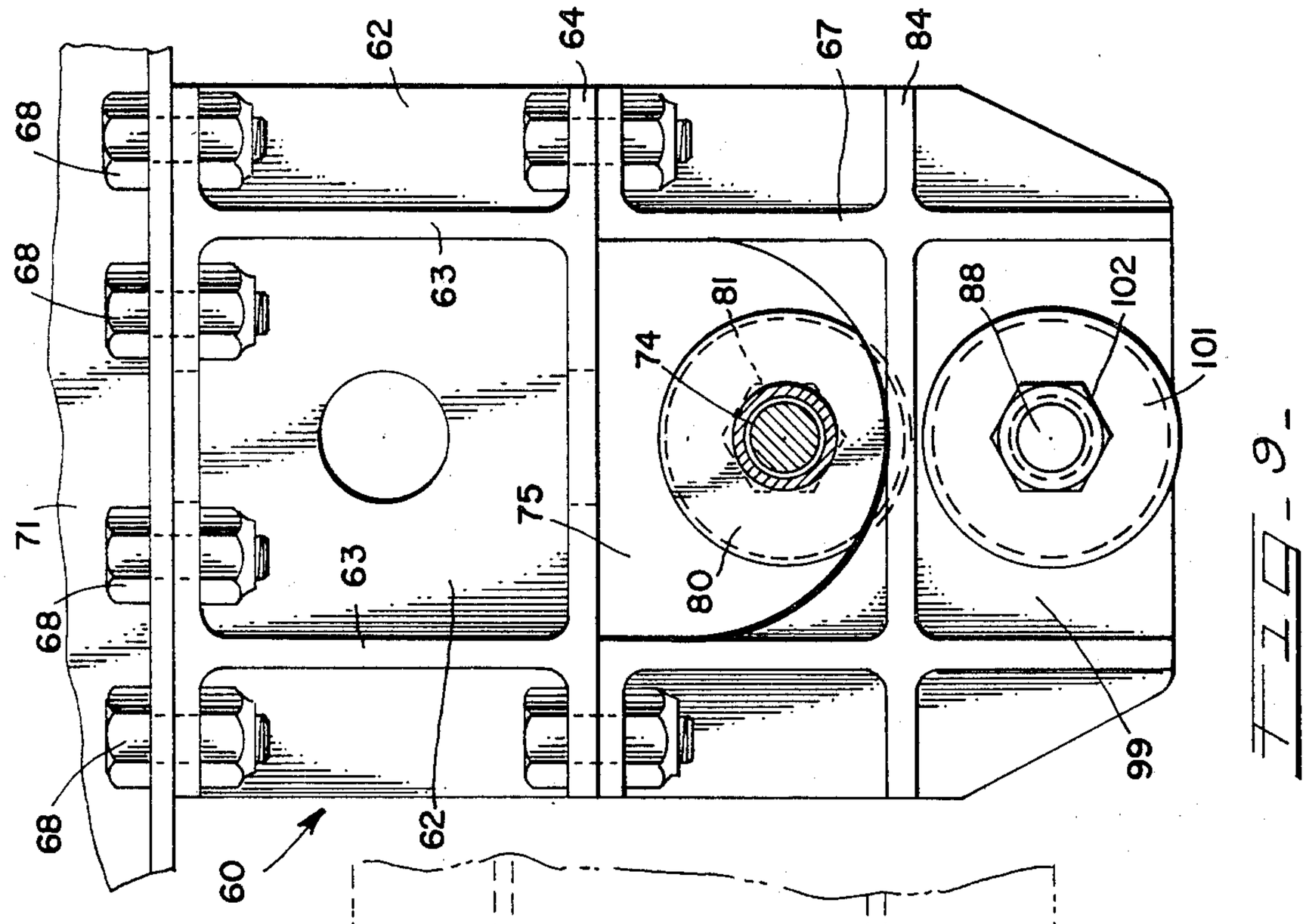

FIG. 9.

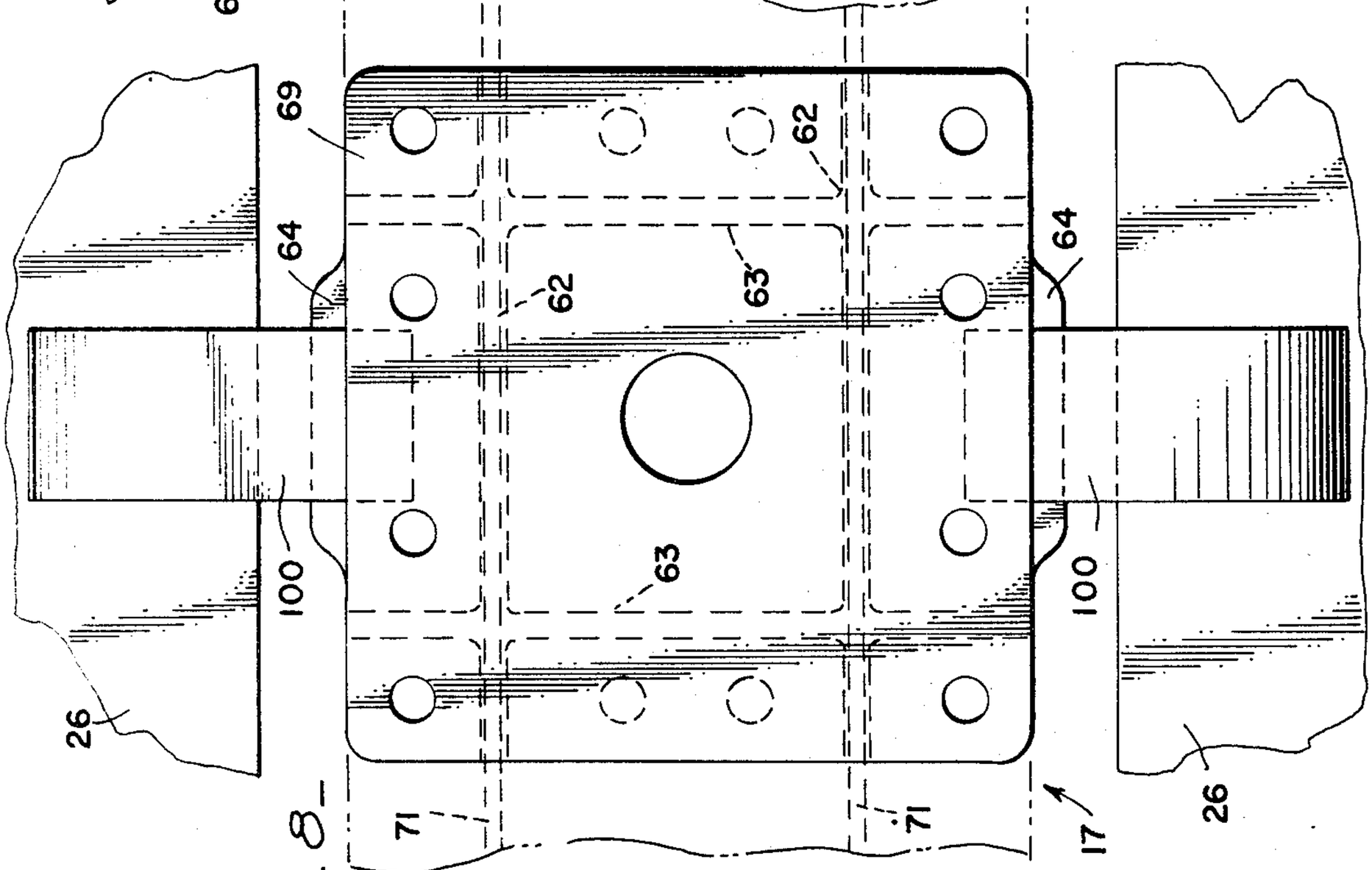

FIG. 8.

INVENTORS
ANDREW J. CHRISTIAN
WILLIAM VAN DER SLUYS
BY Fred P. Kotler
ATT'Y

Sept. 24, 1968 A. J. CHRISTIAN ET AL 3,402,679

RAILWAY CAR TRUCKS

Filed Oct. 23, 1965 11 Sheets-Sheet 8

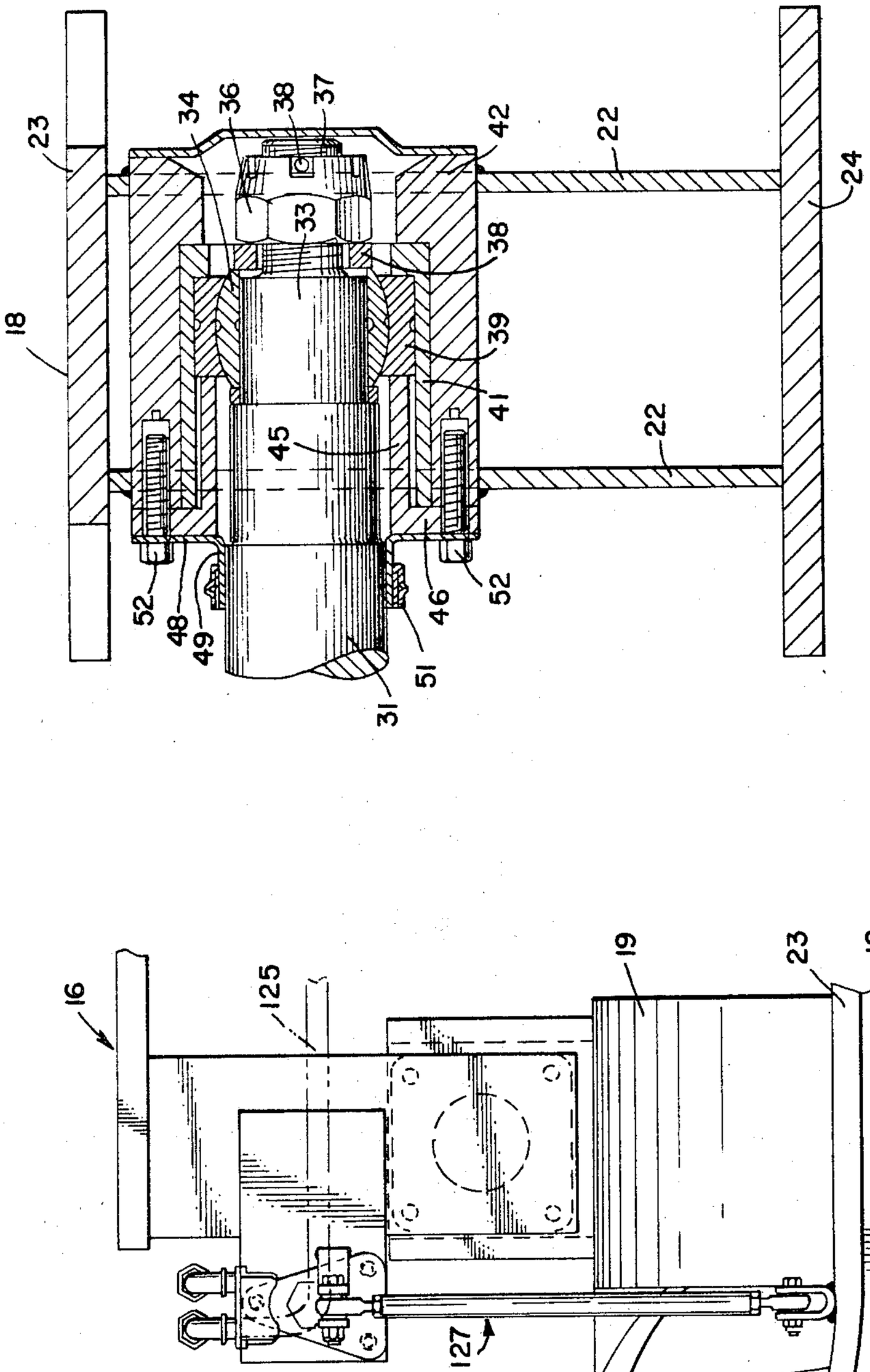

FIG. 10

FIG. 11

INVENTORS
ANDREW J. CHRISTIAN
WILLIAM VAN DER SLUYS
BY Fred P. Koetke
ATT'Y

Sept. 24, 1968 A. J. CHRISTIAN ET AL 3,402,679

RAILWAY CAR TRUCKS

Filed Oct. 23, 1965 11 Sheets-Sheet 9

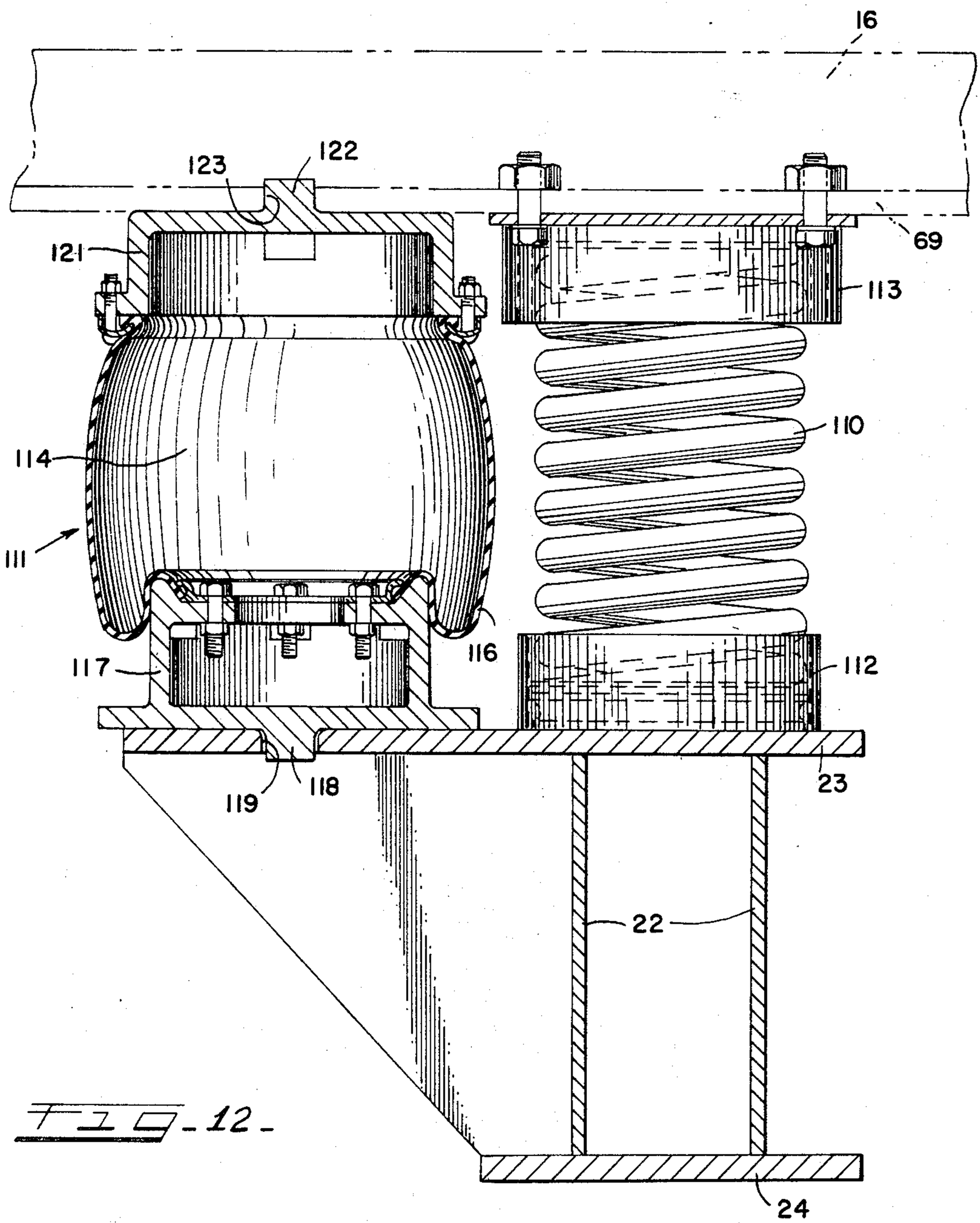

FIG. 12

INVENTORS
ANDREW J. CHRISTIAN
WILLIAM VAN DER SLUYS
BY Fred P. Fostes
ATT'Y

FIG. 13

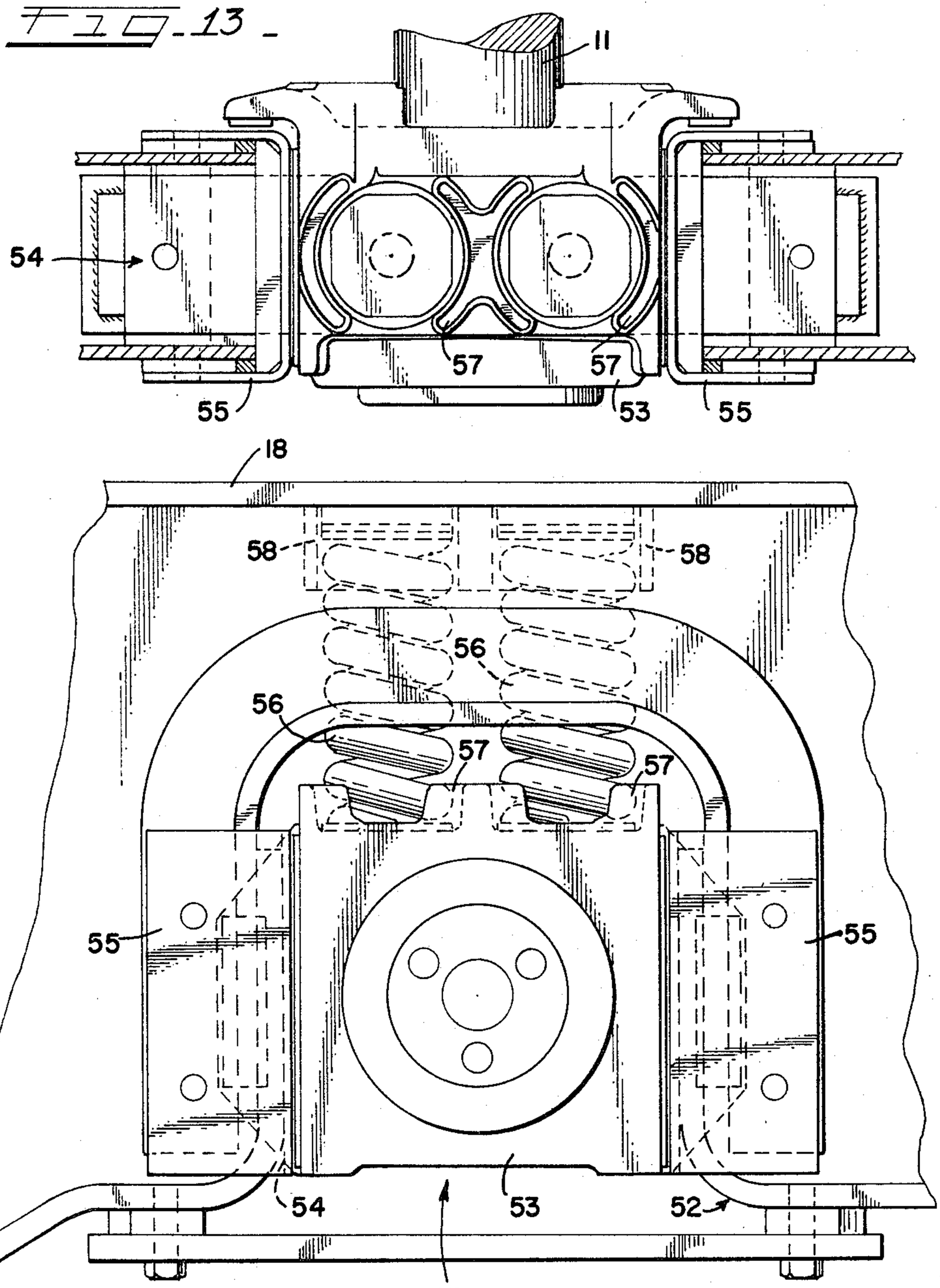

13

FIG. 14

INVENTORS
ANDREW J. CHRISTIAN
WILLIAM VAN DER SLUYS
BY Fred P. Fostle
ATT'Y

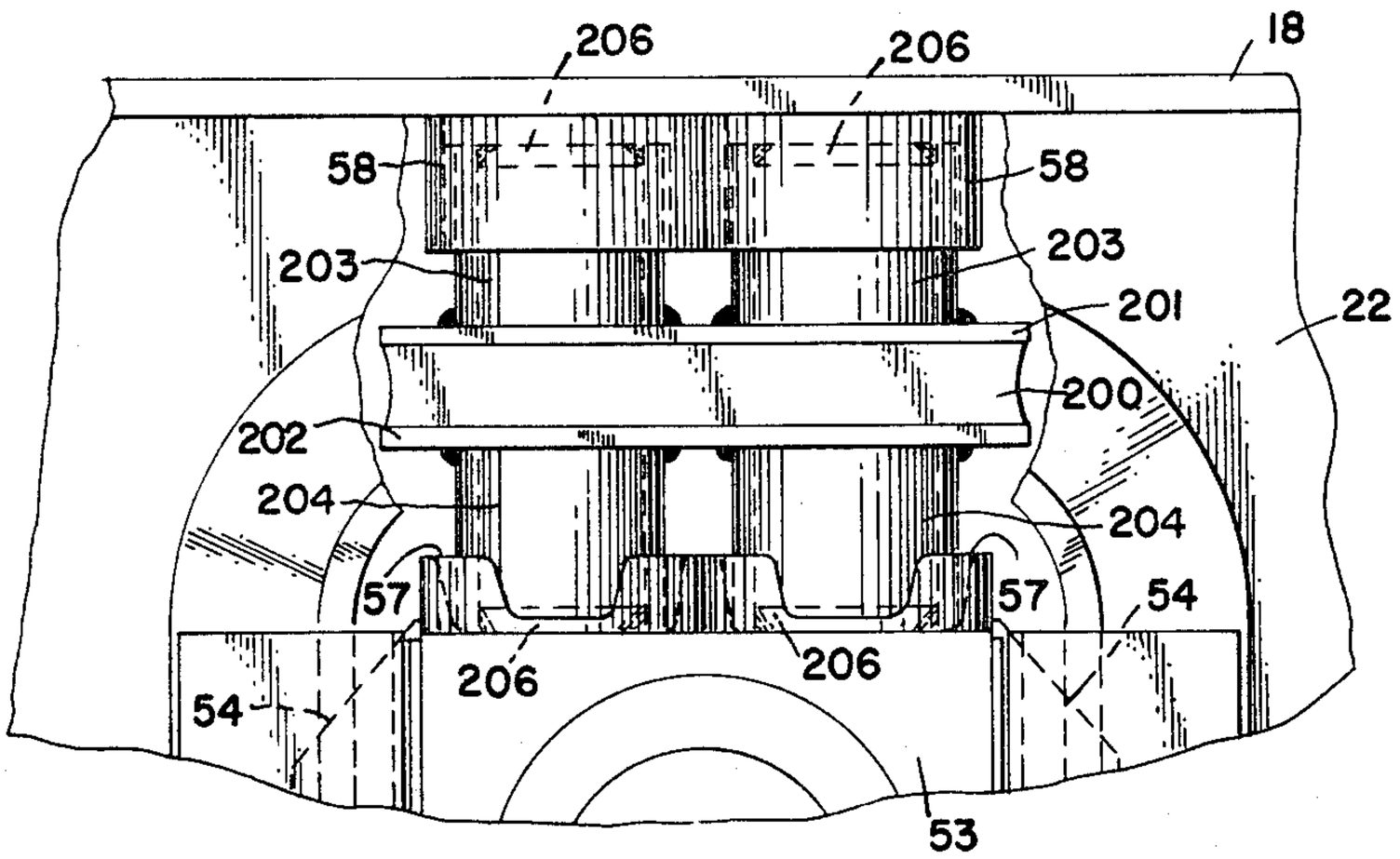

FIG. 15

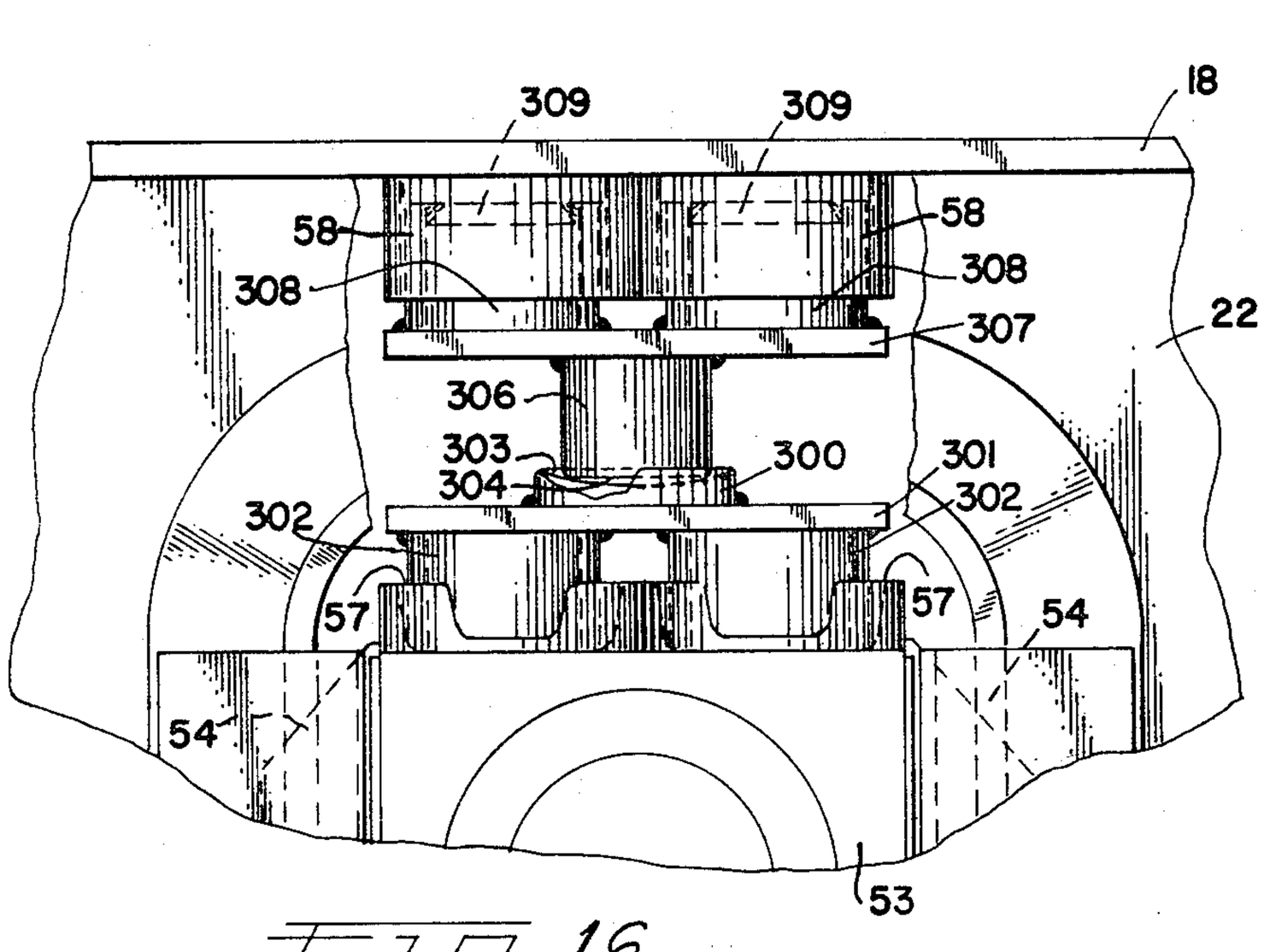

FIG. 16

INVENTORS
ANDREW J. CHRISTIAN
WILLIAM VAN DER SLUYS
BY Fred P. Kostka
ATT'Y

United States Patent Office

3,402,679

Patented Sept. 24, 1968

3,402,679
RAILWAY CAR TRUCKS

Andrew J. Christian, Chicago, and William Van Der Sluys, Homewood, Ill., assignors to Pullman Incorporated, Chicago, Ill., a corporation of Delaware

Filed Oct. 23, 1965, Ser. No. 502,840
14 Claims. (Cl. 105—199)

ABSTRACT OF THE DISCLOSURE

A railway vehicle truck for direct connection to a transit vehicle body including a pair of oppositely disposed side frames, each frame having a transversely extending transom and connecting means pivotally connecting the free end of each transom to the opposite frame with the transoms being longitudinally spaced from each other so that the frames are pivotal relative to each other about a diagonal axis extending through the connecting means; the side frames are supported by a pair of longitudinally spaced and transversely extending wheel and axle assemblies which are attached to the side frames by journal box assemblies having resilient means whereby the wheel and axle assemblies have relatively greater movement vertically than longitudinally.

The present invention relates to railway vehicle trucks and in particular to a lightweight railway vehicle truck for use with transit railway vehicles.

It is the principal object of the present invention to provide a lightweight truck for transit railway vehicles.

It is another object to provide a railway vehicle truck for transit railway vehicles which is constructed in a manner so that the bolster, centerplate, and truck bolsters conventionally used to mount the truck on the vehicle body are eliminated and thereby reduce the overall weight of the truck and transit vehicle.

It is still a further object to provide a railway vehicle truck with a new and novel arrangement for resiliently connecting the truck directly to the vehicle body so that the truck and vehicle body are permitted limited relative movement in a vertical and horizontal plane.

It is still a further object to provide a railway vehicle truck with a new and novel arrangement for resiliently connecting the truck to the vehicle body, and connecting the truck springs directly to the vehicle body so that the truck springs are laterally and longitudinally deflectable during relative movement of the vehicle body and truck.

Further objects and features will hereinafter appear.

In the drawings:

FIG. 1 is a fragmentary side elevational view of a transit vehicle body mounted on a railway vehicle truck embodying the principles of the present invention;

FIG. 2 is an enlarged side elevational view showing the railway vehicle truck of the present invention mounted on the underside of a transit vehicle body;

FIG. 3 is a top plan view of the railway vehicle truck;

FIG. 4 is a perspective view of the railway vehicle truck and showing in phantom the connecting plates on the underside of the railway transit vehicle;

FIG. 5 is across-sectional view taken generally along the lines of **5—5** of FIG. 3 and showing the arrangement for connecting the railway vehicle truck directly to the underside of the transit vehicle body;

FIG. 6 is a perspective view of the railway vehicle truck similar to FIG. 5;

FIG. 7 is a view taken generally along the lines **7—7** of FIG. 3 and showing in particular one of the side frame stems extending between and connecting the two laterally spaced side frames of the track;

FIG. 8 is a top plan view of the hanger means used to connect the truck directly to the underside of the vehicle body;

FIG. 9 is a cross sectional view taken generally along the lines of **9—9** of FIG. 5 and showing in particular an end elevational view of the hanger;

FIG. 10 is a cross sectional view taken through the connection of the stem of one of the side frames to the opposite one of the side frames;

FIG. 11 is a view taken generally along the lines **11—11** of FIG. 7 and showing in particular the connection of the leveling valve between the transit vehicle body and the truck;

FIG. 12 is a view taken generally along lines **12—12** of FIG. 3 and showing in particular the connection of the vehicle body springs and the air spring to the truck frame and the underside of the railway car;

FIG. 13 is a fragmentary top plan view of the journal box arrangement seated within the side frame;

FIG. 14 is a fragmentary front elevational view of the journal box arrangement illustrated in FIG. 13;

FIG. 15 is a fragmentary front elevational view of a journal box arrangement and showing another embodiment for resiliently supporting the truck side frames thereon; and

FIG. 16 is a fragmentary front elevational view of a journal box arrangement and showing still a further embodiment for supporting the truck side frames thereon.

Referring now to the drawings, in particular, FIGS. 1–4, embodying the principles of the present invention, the truck comprises generally a wheel axle unit **10**, or trucks, including wheel axles **11**, wheels **12**, and journal boxes **13** mounted in side frame units **14**. The truck **10** is shown directly attached to the underside of a transit vehicle body **16** including an underframe **17** as more fully to be explained hereinafter.

The side frame units **14** include side frame members **18—18** from each of which there extends a stem or transom **19**. The transoms **19—19** are each offset toward one end of the respective side frame members **18—18** so as to be lengthwise spaced from each other to provide a space **21** therebetween.

The side frame members **18—18**, as shown for example in FIG. 10, are generally fabricated to form a hollow section defined by two transversely spaced side webs **22—22**, and top and bottom plates **23** and **24** fixed on the upper and lower edges respectively of the side webs **22**. The transoms **19** may similarly be formed with hollow sections adjacent the ends fixed to the side frame members **18—18** and with I-beam sections as shown for example in FIG. 5, including an upright wall **25**, top and bottom plates **26** and **27**. Adjacent the free ends as shown in FIG. 7 there is disposed and fastened between the top and bottom plates **26** and **27** a rectangular block **28**.

As shown in FIG. 4, the side frames **18—18** are each formed with an intermediate section providing a substantially horizontal platform **29** which is disposed between a pair of longitudinally spaced wheel supporting sections **30**.

As shown in particular in FIGS. 13 and 14, the wheel supporting sections or pedestal legs **30** of the frames **18—18** are of the pedestal type and are each formed with inverted U-shaped cut-outs or pedestal jaws for accommodating the journal box assembly **13**. Generally, the journal-box assembly **13** comprises a journal box housing **53** incorporating the conventional journal elements not shown. The journal box housing **53** is formed along its sides with outwardly extending flanges **54** which are guided within guide means **55—55** suitably fixed to the side defining the inverted U-shaped opening **52**. The journal box housing is suitably fixed to the respective

ends of the axle assembly **11** inboard of the frames **18—18** and the wheels **12** fixed outboard thereof.

For resiliently resisting the vertical movement of the wheel and axles relative to the frames **18—18** springs **56—56** are seated at one end in guide cups **57—57** formed on the upper side of the journal housing **53**. At the other ends the springs **56—56** are seated within guides **58—58** fixed to the underside of the top web plate **23**.

A further modification for resiliently supporting the side frames **18—18** on the axles **11** is illustrated in FIG. 15 wherein there is employed a resilient pad **200**. The resilient pad, such as a rubber pad, **200** is disposed and adhered between a pair of plates **201** and **202**. Fixed to the upper plate **201** are a pair of longitudinally spaced bosses **203** which are seatable within the guides **58—58**. Similar bosses **204** are fixed to the lower plate and seated within the journal box guide cups **57—57**. In order to maintain the weight at a minimum the bosses **203** and **204** are each preferably formed from hollow cylindrical tubing of which the free ends are covered by a disc **206**.

It is to be noted that the springs **56—56** and the resilient pad **200** of the embodiments illustrated in FIGS. 14 and 15 permit relative rocking movement of the side frame units **14** and the axles **11** while resiliently resisting the relative vertical movement. In the event that the vertical resilient support between the axle **11** and side frame units **14—14** is not desired, the embodiment of FIG. 16 may be used. As shown, there is provided a cylindrical support **300** fixed at one end to the upper surface of a plate **301** from the underside of which there depend hollow cylindrical bosses **302** which are nested at the free ends thereof in the journal box guide cups **57—57**. At its upper end the cylindrical support **300** is formed with a spherical concave surface **303**.

Seated on the concave surface **303** is a substantially complementary spherical convex surface **304** formed on one end of a column **306**. At its other end the column **306** is fixed to the underside of plate **307** from the upper side of which there depends a pair of bosses **308** received within the guides **58—58**. The bosses **308** which may be formed from hollow cylinders may be closed by discs **309**. The foregoing structure permits relative rocking movement of the side frame units **14—14** and the axles **11** by way of the contacting spherical convex surface **304** on the column **306** with the spherical concave surface **303**.

Mounted on the exterior of the frames **18—18** and coacting with the wheels may be self-contained tread brake units **59**. The tread brake units **59** may be of conventional design and further description thereof is not deemed necessary inasmuch as the units do not form an essential part of the invention.

As shown in FIGS. 7 and 10, one end of each of the transoms **19** is integrally fixed to a respective one of the side frames **18** and the free end extends toward an opposing one of the frames **18**. Connecting each of the free ends of the transoms **19** to the opposing one of the frames **18** is a shaft **31** which is fixed at one end as by a bolt within an opening **35** of the block **28**. At its other end, the shaft **31** is formed with a section **33** of reduced diameter on which there is seated a sperical bearing **34**. Fixing the spherical bearing **34** against longitudinal movement on the section **33** is a nut **36** which is threaded on a thread end **37** of the shaft **31**. The nut **36** bears against a collar **38** which encompasses the thread end **37** and bears against the spherical bearing **34** as shown in FIG. 10. Securing the nut against turning on the thread end **37** is a cotter or dowel pin **38***a*.

The spherical bearing **34** is seated within a bushing **39** which is supported in a bushing sleeve **41** inserted in a bearing housing **42** seated within the side walls **22** of the side frame **18**. The housing **42** is suitably fixed within aligned openings in the side walls **22** by means of welding or the like. Further holding the bushing **39** against displacement is an insert sleeve or collar **45** having a flange **46** which abuts against the outer terminal end of the bushing sleeve **41**. Fixed to the collar **45** is a dust cover **48** formed with a sleeve **49** which embraces the shaft **31** and is loosely clamped by a sleeve clamp **51**. The dust cover **48** may be fixed to the collar **45** by means of screws **52** which extend through the flange **46** of the collar into the bearing housing **42** and therefore also retain the sleeve **41** fixed to the collar **45**.

With the transoms **19—19** connected as described above there is provided a pivot axis A extending diagonally between the lengthwise spaced connections. Thus the side frames are pivotal relative to each other about the diagonal pivot axis whereby the four wheels of the truck are capable of traversing roadbeds having the tracks at different heights and different angles. This imparts a smooth ride to the car body on which the truck is mounted. At the same time it is to be noted that the transoms **19—19** maintain a constant and uniform lateral spacing between the side frames **19** so as to impart a stability and rigidity to the truck.

In accordance with the present invention the truck **10**, constructed as heretofore generally described, is directly attached to the underframe **17** of the transit car **16**. To this end there is provided the hanger **60** as shown particularly in FIGS. 3, 4 and 5. The hanger **60** which may be formed as by a casting comprises a top plate **61** from which there depend two longitudinally spaced webs **62**, two depending transversely spaced webs **63**, and a bottom plate **64**. Bolted to the bottom plate is a first hanger bracket **66** and a second lengthwise spaced hanger bracket **67**. The hanger **60** and brackets **66** and **67** are located to depend within the space **21** defined by the lengthwise spaced transoms **19—19**.

The foregoing described hanger **60** is connected and fixed to the underside of the car body **16** by means of bolts **68** which are fastened to a transversely extending plate **69** extending across the bottom or underside of the underframe **17**. To achieve the desired clearance between the underside of the body and the rail track level the plate **69** may be spaced from the underframe members by means of vertically downwardly depending webs **71** fixed to a plate **70** extending between the side sills of the transit car.

Connecting the hanger **60** to the side frame units **14—14** so as to permit relative movement of the truck **10** and car body **17** in vertical and lateral directions and relative pivotal or swivelling movement are resilient connecting members **72** and **73**. In the form shown the resilient connecting member **72** is supported by the hanger **66** and the transom **19** of one of the side frames **18** and the other resilient member **73** is connected between the bracket **67** and the transom **19** of the other remaining side frame member **18**.

As shown in particular in FIGS. 5 and 6, the resilient connecting member **72** includes a shaft or rod **74** having mounted on one end thereof a pair of annular resilient pads **76** and **76***a* formed from rubber or the like and shaped in the form of a disc and having an annular flange **77** which projects into a circular opening **78** provided in a web **75** of the hanger bracket **66**. Compressing the outer face of the resilient pad **76** against the opposing face of the web **75** is an annular plate **79** which is held fixed by means of a nut **81** threaded on the end of the rod **74**. The pad **76***a* is held compressed by means of a spacer assembly **82** including an annular plate **80** which compresses the annular pad **76***a* against the web **75**. Fixed to the plate **80** is one end of a cylinder **84** which is coaxially disposed about the shaft **74** and has fixed to its other end a similar annular plate **80***a*.

The plate **80***a* compresses a resilient pad **85***a* which is of a similar construction to the pad **76***a* and includes an annular flange **90** which is diposed within an opening **86** formed in the transom web plate **25**. Disposed on the opposite side of the web plate **25** is a second annular resilient pad **85** also formed with an annular flange **90**. The pad **85** is held compressed between the web plate **25** and a

second annular plate **79** which is held in position by means of the nut **81***a* threaded on the end of shaft **74**.

The resilient connection **73** is similar to the construction of the resilient connection **72** including a shaft **88** having mounted on one end a pair of the annular resilient pads **89** and **89***a* and on the other end a pair of pads **97** and **97***a*. The pads **89** and **89***a* and pads **97** and **97***a* are each formed with annular lips **90** and **98**, respectively. Disposed between the pads **89***a* and **97***a* is a clamping assembly **105** including a coaxial sleeve **94** disposed about the shaft **88**.

The annular resilient pads **89** and **89***a* are disposed with the annular flanges seated within an opening **95** formed in the vertical web **25** fixed between the upper and lower plates **26** and **27** of the other of the transoms **19**. Holding the annular resilient pad **89** compressed against the web **25** is an annular clamping plate **91** which is held in clamping position by means of a nut **93** threaded on the end of the shaft **88**.

At the other end of the shaft **88** the annular resilient pads **97** and **97***a* are located on opposite sides of a web **99** of the bracket **67** with the annular lips **98** of each pad disposed within an opening **103** formed in the web **99**. Holding the pad **97** compressed against the web **99** is an annular clamping plate **101** which is held in clamping position by means of a nut **102** threaded on the end of the shaft **88**. The other resilient pad **97***a* is held compressed by means of a plate **96** fixed to the end of the sleeve **94** of the clamping assembly **105**. The other end of the sleeve **94** has fixed thereto a second clamping plate **92** which compresses the resilient pad **89***a* against the transom web **25**. To achieve the desired clamping pressure of the plates **92** and **96** of the clamping assembly **105** on the respective resilient pads **89***a* and **97***a* shims **83** may be inserted between the plates and respective pads. Similar shims **83** may be used for the same purpose in the resilient connection **72**.

It is to be noted that the resilient connections **72** and **73** are axially spaced and vertically aligned from each other and also in overlying parallel relationship. This arrangement utilizes a minimum amount of space while effectively connecting the truck **10** to the vehicle body **16**. Moreover, the resilient connections **72** and **73** permit the relative rocking movement of the side frame units **14** in a vertical plane relative to each other about the spaced transom connections heretofore described. This is achieved by the yielding of the resilient pads **76–76***a*, **85–85***a*, **89–89***a* and **97–97***a* supporting the shafts **74** and **88**, respectively, so that the latter are substantially independently responsive to the vertical movement of side frame units **14—14**.

During train operation when the transit vehicle is traversing a curve the above described resilient connections **72** and **73** permit the relative turning of the trucks **10** and the vehicle body **16**. As the vehicle traverses the curves the spaced trucks **10**, mounted on the underside of the body **16**, swivel in a horizontal plane relative to the vehicle body. Upon such swiveling the side frames **18—18** and the transoms **19—19** fixed thereto are turned in the direction of curvature of the tracks so that ends of the shafts **74** and **88** mounted on the transoms **19—19** are turned in a horizontal plane. The other ends of the shafts **74** and **88** are held in the hanger brackets **66** and **67** fixed to the vehicle body **16** by way of the hanger **60**.

During the turning movement of the shafts **74** and **88**, the pads **85–85***a* and **76–76***a*, and pads **89–89***a* and **97–97***a* are further compressed into a wedge shape resisting the direction of turning of the vehicle body **16** relative to the truck frames. Preferably the compression on the pads **85–85***a* and **76–76***a* and pads **89–89***a* and **97–97***a* is controlled so as to permit a maximum relative turning of about 5° between the vehicle body **16** and the trucks **10**. Such control of the compression may be obtained by the adjustment of the nuts **81**, **81***a*, **93** and **102**, and the insertion or deletion of shims **83**. The resisting force of the compressed resilient pads is also used to assist in the vertical realignment of the vehicle body **16** with the trucks **10** as more fully to be explained hereinafter.

Fixed to the top web **26** of each of the transoms **19** is a safety lug **100** which is arranged to be disposed over the bottom plate **64** of the hanger **60**. The safety lugs **100** serve to prevent complete separation of the truck **10** from the car body **16** in the event of an accident.

Disposed on the intermediate sections or platforms **29** of each of the side frame members **18—18** are a pair of vehicle springs **110—110** and an air spring **111**. The vehicle springs **110** are of the helical type of which one end of each is supported in a cup housing **112** (FIG. 12) fixed as by welding to the respective top plates **23** of the side frame members **18** and the other end is received within a cup shaped housing **113** which is fixed as by bolts to the plate **69** mounted on the underside of the vehicle body **16**. The helical springs **110—110** are of such strength as to support resiliently the unloaded weight of the vehicle body **16** and to withstand the lateral horizontal deflection due to relative displacement and pivoting of the vehicle body and truck frames.

The air springs **111** serve to maintain the vehicle body spacing or level constant under the load of the passengers carried by the vehicle. The air spring **111** may be of substantially conventional structure including an expandable fluid chamber formed by a flexible housing **116** to one end of which there is fixed a base **117** having a shear boss **118** which is received within a complementary opening **119** formed in the top plate **23** of the side frame **18**. Fixed to the upper end of the flexible housing **116** is a cover **121** having a boss **122** which is received within an opening **123** formed in the truck mounting plate **69**. Fixing the cover **121** and thereby the air spring **111** to the plate **69** is a plurality of bolts. As shown in FIGS. 2 and 11 by means of a tube **125** the chamber **114** is connected to a suitable regulated fluid source including the usual level control valve assembly **127** which serves to sense the weight of the load being carried by way of the vertical deflection of the vehicle body relative to the truck **10** and to regulate the the fluid air pressure within the chamber **114** and thereby maintain the desired level of the body above the trucks. The level control assembly is of generally conventional structure so that a further description is not deemed necessary.

Also connected between each of the side frames **18—18** and the underside of the vehicle body **16** may be telescoping shock absorbers **129** as shown in FIGS. 2 and 4. One end of each of the shock absorbers **129** is mounted for vertical movement with the side frame **18** between cushion pads **128** permitting limited rocking movement of the end on the side frame. The other end is connected to the plate **69** for movement therewith similarly between cushion pads **128**. The shock absorbers **129** connected in this manner are operative to absorb or cushion vertical shocks while being substantially universally movable at least to the degree necessary at each end to accommodate the relative horizontal movement between the vehicle body **16** and the truck **10**.

In connection with the relative movement of the vehicle body **16** and trucks **10**, as discussed heretofore the swiveling movement occurs during the traversal of the vehicle on curved trackage so that the longitudinal axis of the vehicle body **16** and the direction of movement of the trucks are not aligned. As this relative movement occurs the truck springs which are fixed between the underframe **17** and the truck side frames are laterally deflected so as to provide a torsional force resisting such relative turning. At the same time, as described in connection with the resilient connecting means, the annular pads **76–76***a*, **85–85***a*, **89–89***a* and **97–97***a* are also angularly compressed to provide an additional force resisting the turning movement. With truck **10** fixed directly to the underframe **17** in accordance with the present invention, these resisting forces provided by the truck springs **110** and the pads

76–76*a*, 85–85*a*, 89–89*a* and 97–97*a*, along with the wheel flange guiding action, are used to return the vehicle body and the direction of movement of the trucks into longitudinal alignment.

What is claimed is:

1. A railway vehicle including a body and a truck, said truck comprising:
a pair of transversely spaced side frames,
said side frames each having longitudinally spaced journal box receiving means to accommodate journal box assemblies therein for relative vertical movement,
a pair of longitudinally spaced and transversely extending wheel and axle assemblies,
journal box assemblies being mounted on the axles of said wheel and axle assemblies and received by said journal box receiving means,
resilient means supporting said side frames on said journal box assemblies so that said side frames and said wheel and axle assemblies are relatively vertically movable,
a pair of longitudinally spaced transoms rigidly fixed at one end to opposite ones of said side frames and connected at the other ends to the other of the side frames so that said side frames are pivotal relative to each other about a diagonal axis extending through said connected other ends of said transoms, and retaining means disposed on said truck and extending into interengaging relationship with said body to define a limit of vertical movement between said truck and the body.

2. A rail vehicle truck for supporting a vehicle body, said truck comprising:
two opposed side frame units of substantially T-shape,
each unit including a longitudinally extending side frame and a transom extending transversely therefrom toward the opposite side frame,
said transoms being relatively longitudinally spaced apart,
connecting means connecting the ends of said transoms to the respectively opposite side frame to permit pivotal movement of said unit about a diagonal pivot axis extending through said connecting means,
each said side frame having pedestal type end portions including pedestal legs defining inverted U-shaped pedestal jaws,
a journal box assembly vertically slidably supported in each pedestal jaw,
wheel axles supported in said journal box assemblies,
pedestal spring means between said pedestal jaws resiliently supporting said side frame units on said journal box assemblies,
means connected between said truck and said rail vehicle body comprising vertical supporting spring means supported on said side frame units,
said vertical spring means resiliently resisting turning movement of said body relative to said truck and retaining means disposed on said frame units and extending into interengaging relationship with said vehicle body to define a limit of vertical movement between the truck and said body.

3. A rail vehicle truck for supporting a vehicle body, said truck comprising:
a frame including two opposed side frame units of substantially T-shape,
each unit including a longitudinally extending side frame and a transom extending transversely therefrom toward the opposite side frame unit,
said transoms each being longitudinally displaced to provide a space therebetween,
connecting means connecting the ends of said transoms to the respective opposite side frame unit to permit pivotal movement of said side frame units about a diagonal pivot axis extending through said connecting means,

attaching means for attaching said truck directly to the frame of a rail vehicle body,
said attaching means including hanger means fixedly mounted on the vehicle body and projecting downwardly into said space,
lug means on said transoms for cooperating with said hanger means to prevent complete separation of said truck and vehicle body,
and resilient means within said space connecting said hanger means to said transoms restraining longitudinal displacement of said vehicle body relative to said truck while permitting limited pivotal movement of said side frame units relative to each other about said diagonal pivot axis,
and spring means resiliently resisting turning movement of said truck relative to said vehicle body.

4. A vehicle truck in accordance with claim 3 wherein said resilient means includes first and second members each having an end portion resiliently connected to said hanger means,
said first and second members extending longitudinally in opposite directions away from said hanger means toward an adjacent one of said transoms, and resilient means connecting each of said first and second members to said respective adjacent transom.

5. A truck in accordance with claim 4 wherein said spring means includes helical springs mounted on said side frame units outwardly of said space and between said transoms, and
means connecting said helical springs to said vehicle body whereby said helical springs and said resilient members coact to resist turning movement of said truck relative to said vehicle body.

6. A truck in accordance with claim 5 wherein said side frames have end portions of pedestal type construction including inverted U-shaped cut-outs,
a journal box assembly vertically slidably supported in each cut-out,
wheel axles rotatably supported in said journal box assemblies, and
spring means disposed above each said journal box and each said end portion of said side frames.

7. A vehicle truck in accordance with claim 3 wherein said spring means includes helical springs mounted on said side frame units, and
means connecting said helical springs to said side frames and to said vehicle body whereby said helical springs coact with said resilient means to resist turning movement of said truck relative to said vehicle body.

8. A rail vehicle truck for supporting a vehicle body, said truck comprising:
two opposed side frame units of substantially T-shape,
each unit including a longitudinally extending side frame and a transom extending transversely therefrom toward the opposite side frame,
said transoms being longitudinally spaced apart,
connecting means connecting the ends of said transoms to the respectively opposite side frame to permit pivotal movement of said side frame units about a diagonal pivot axis extending through said connecting means,
attaching means for attaching said truck directly to the frame of a rail vehicle body,
said attaching means including springs supporting said vehicle body on said side frame units and permitting limited pivotal movement of said side frame units about said diagonal pivot axis,
retaining lub means disposed on said transom in space leading to said attaching means to define a limit of vertical movement between said truck and vehicle body,
and spring means resisting turning movement of said truck relative to said vehicle body.

9. A railway vehicle truck for connection directly to a transit vehicle body, said truck comprising a frame in-

cluding two opposed rigid side frame units of substantially T-shape, each unit including a rigidly extending side frame and a transom extending transversely therefrom toward the opposite side frame unit, said transoms each being offset to provide a longitudinal extending space therebetween, connecting means connecting the ends of said transoms to the respective opposite side frame unit to permit relative pivoting of said side frame units about a diagonal axis extending between said connecting means, attaching means for attaching said truck directly to the frame of the transit vehicle body, said attaching means including hanger means fixedly mounted on the vehicle body against turning and projecting downwardly between said side frame units and into said longitudinal space between said offset transoms, first resilient means extending between said hanger means and one of said transoms, and second resilient means extending between said hanger and the other of said transoms, said first and second resilient means being disposed in vertically spaced alignment on the longitudinal center line of the truck to permit said relative pivoting of said truck side frame units about said diagonal axis and restraining longitudinal displacement of said truck relative to said vehicle body while permitting limited swivelling of said vehicle body relative to said truck.

10. A railway vehicle truck for connection directly to a transit vehicle body, said truck comprising a frame including two opposed rigid side frame units of substantially T-shape, each unit including a longitudinally extending side frame and a transom extending transversely therefrom toward the opposite side frame unit, said transoms each being offset to provide a longitudinally extending space therebetween, means connecting the ends of said transoms to the respective opposite side frame unit to permit relative pivoting of said side frame units in a vertical plane relatively to each other about a diagonal axis extending between said connecting means, attaching means for attaching said truck directly to the underside of the transit car body, said attaching means including hanger means fixedly mounted on the car body against turning and projecting downwardly between said side frame units and into said longitudinal space between said offset transom, first shaft means extending between said hanger means and one of said transoms, second shaft means extending between said hanger and the other of said transoms, said first and second shaft means being disposed in vertically spaced alignment on the longitudinal center line of said truck with adjacent end portions thereof in overlapping relation, and means resiliently mounting each end of said first and second shaft means on said hanger means and said respective one of said transom means in a manner permitting said relative pivoting of said truck side frame units about said diagonal axis and restraining longitudinal displacement of said truck relative to said vehicle body while permitting limited swivelling of said vehicle body relative to said truck.

11. A railway vehicle truck for connection directly to a transit vehicle body, said truck comprising a wheeled axle assembly, a frame including two opposed rigid side frame units of substantially T-shape supported on said wheeled axle assembly, each unit including a rigidly extending side frame and a transom extending transversely therefrom toward the opposite side frame unit, said transoms each being offset to provide a longitudinal extending space therebetween, means connecting the ends of said transoms to the respective opposite side frame unit to permit turning of said side frame units in a vertical plane relatively to each other, attaching means for attaching said truck directly to the frame of the transit vehicle body, said attaching means including hanger means fixedly

mounted on the vehicle body against turning and projecting downwardly betwen said side frame and into said longitudinal space between said offset transoms, first resilient means extending between said hanger means and one of said transoms, and second resilient means extending between said hanger and the other of said transoms, said first and second resilient means being disposed in vertically spaced alignment on the longitudinal center line of the truck to permit limited flexing and turning of said truck side frame units in a vertical plane relative to each other and said vehicle body, and journal box means supporting said side frame units on said wheeled axle assembly, said journal box means including means disposed between said frame and said journal box permitting rocking movement of said frame units relative to said wheeled axle assembly.

12. The invention as defined in claim **11** wherein said means disposed between said journal box means and said side frame units includes a resilient pad disposed between a pair of metal plates, said metal plates having means projecting from the respective outer face and engaging the underside of the side frame units and top sides of the journal box assemblies.

13. The invention as defined in claim **11** wherein said means disposed betwen said journal box means and said side frame units includes a concave support mounted on the upper face of said journal box and a post having a substantially complementary convex face seated within said concave support and extending upwardly to engage at the upper end thereof the underside of said side frame unit.

14. A railway vehicle truck for connection directly to a transit vehicle body, said truck comprising a frame including two opposed rigid side frame units of substantially T-shape, each unit including a rigidly extending side frame and a transom extending transversely therefrom toward the opposite side frame unit, said transoms each being offset to provide a longitudinal extending space therebetween, means connecting the ends of said transoms to the respective opposite side frame unit to permit turning of said side frame units in a vertical plane relatively to each other, attaching means for attaching said truck directly to the frame of the transit vehicle body, said attaching means including hanger means fixedly mounted on the vehicle body against turning and projecting downwardly between said side frame units and into said longitudinal space between said offset transoms, first resilient means extending between said hanger means and one of said transoms, second resilient means extending between said hanger and the other of said transoms, said first and second resilient means being disposed in vertically spaced alignment on the longitudinal center line of the truck to permit limited flexing and turning of said truck side frame units in horizontal and vertical planes relative to each other and said vehicle body and a pair of coil springs mounted on each of said transoms and directly supporting the transit vehicle body.

References Cited

UNITED STATES PATENTS

2,219,360	10/1940	Green	105—200
2,976,819	3/1961	Rossell	105—182 X
3,121,402	2/1964	Julien	105—199 X
3,254,611	6/1966	Travilla	105—197
3,313,245	4/1967	Sundby	105—197

FOREIGN PATENTS

1,175,264	8/1964	Germany.

ARTHUR L. LA POINT, *Primary Examiner.*

H. BELTRAN, *Assistant Examiner.*