Sept. 24, 1968 W. B. TARPLEY, JR., ET AL 3,402,665

NONPYROTECHNIC DISSEMINATOR

Filed Aug. 15, 1966 2 Sheets-Sheet 1

FIG. 1

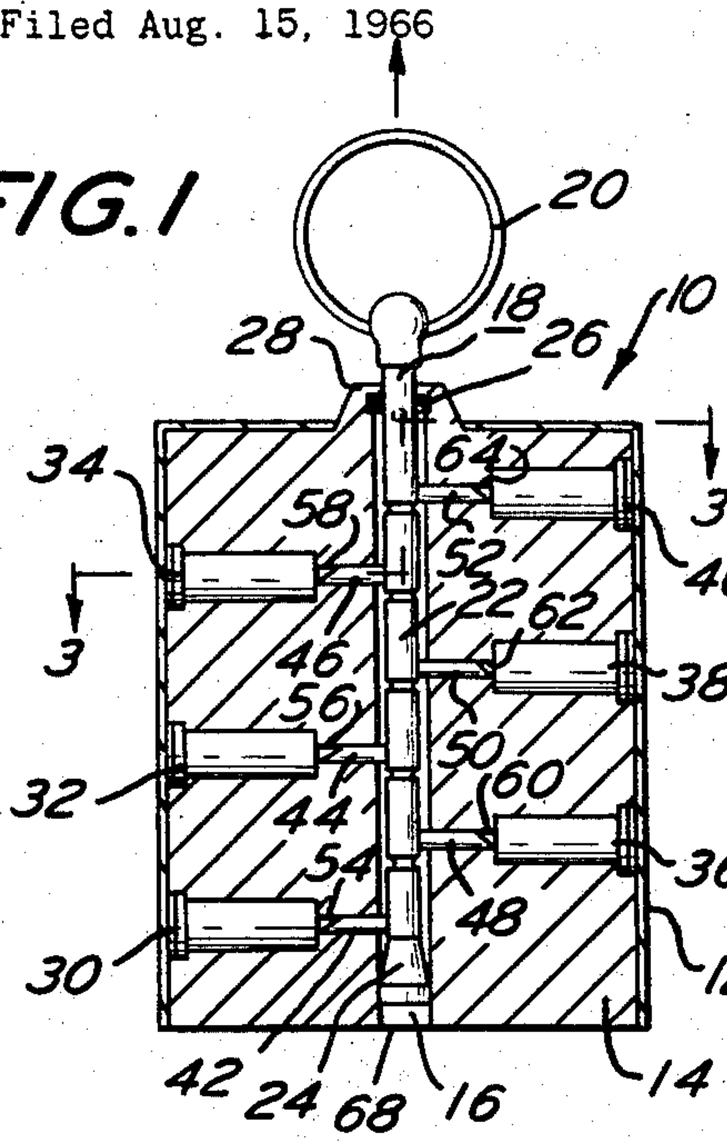

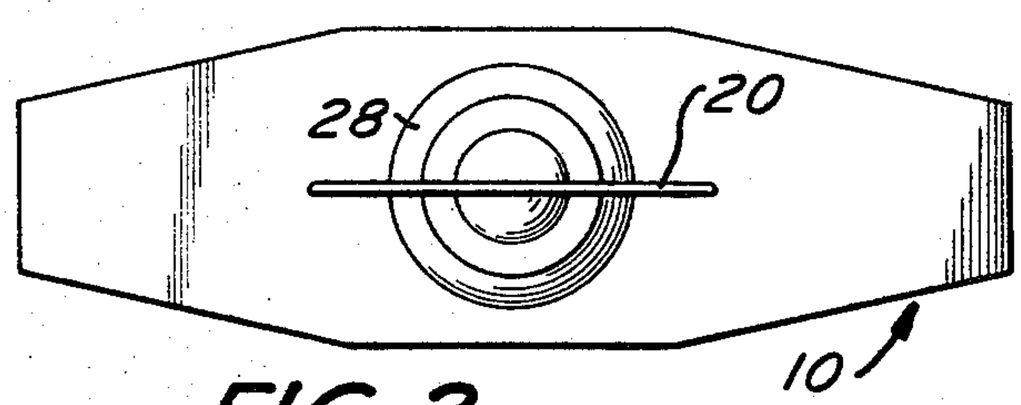

FIG. 2

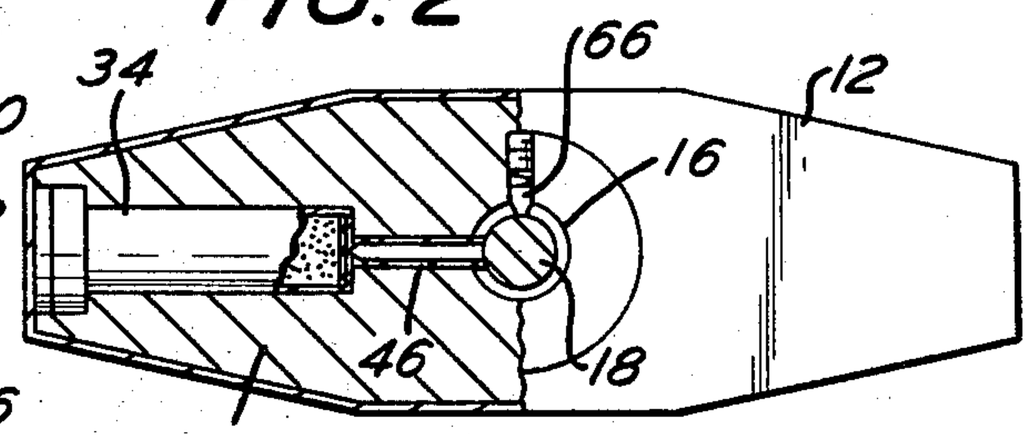

FIG. 3

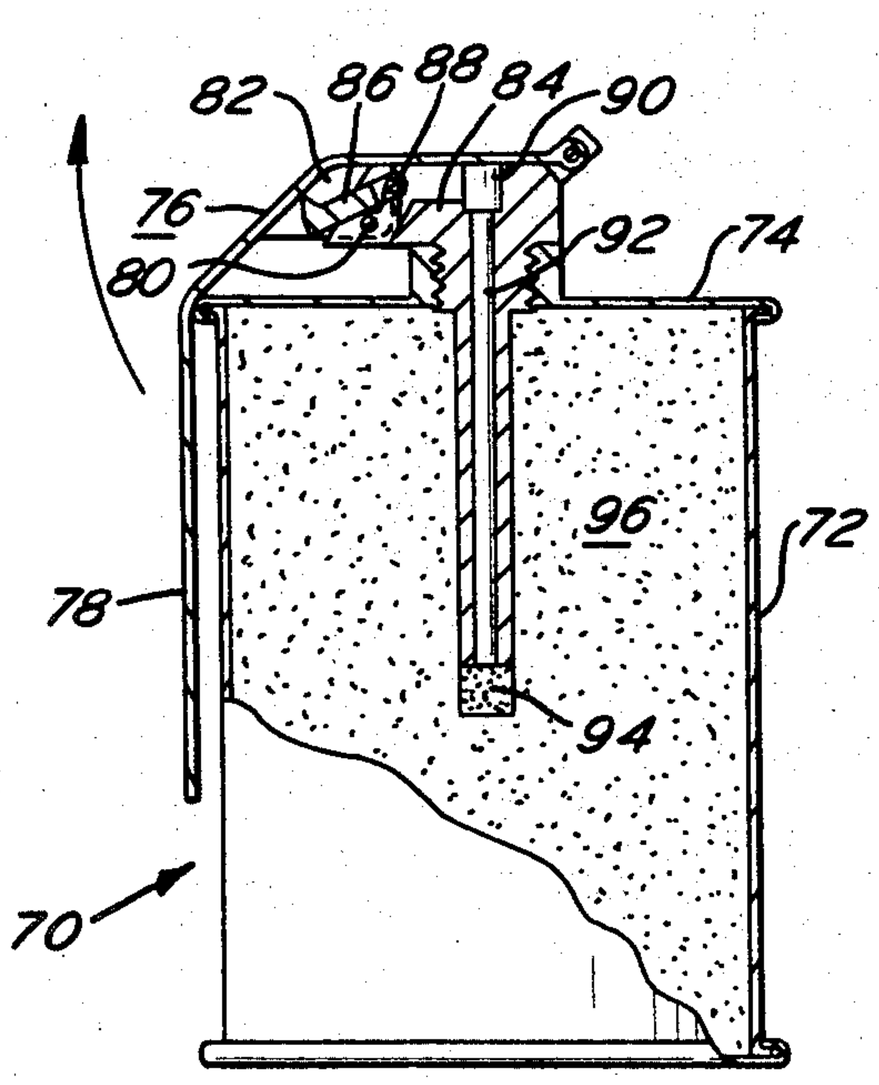

FIG. 4

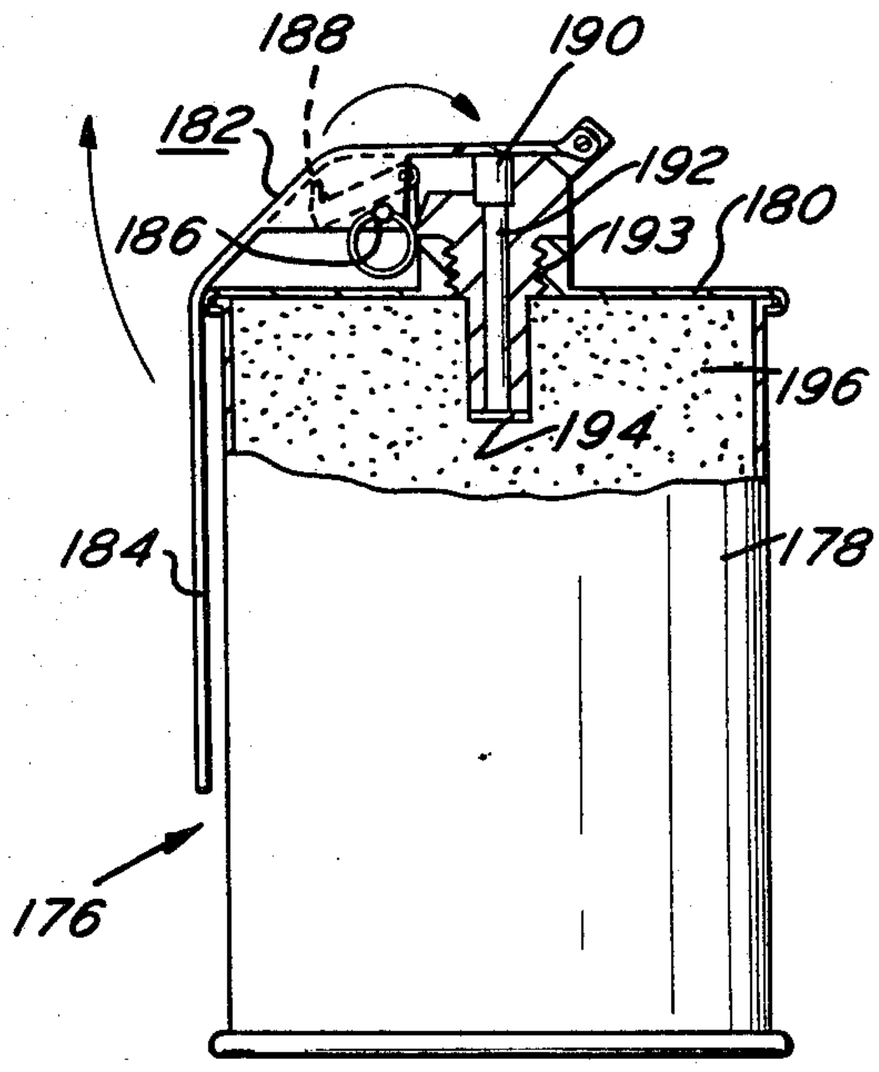

FIG. 11

INVENTORS.
WILLIAM B. TARPLEY, JR.
CHARLES DANA McKINNEY, JR.
BY Seidel & Gonda

ATTORNEYS.

Sept. 24, 1968 W. B. TARPLEY, JR., ET AL 3,402,665

NONPYROTECHNIC DISSEMINATOR

Filed Aug. 15, 1966 2 Sheets-Sheet 2

FIG. 5

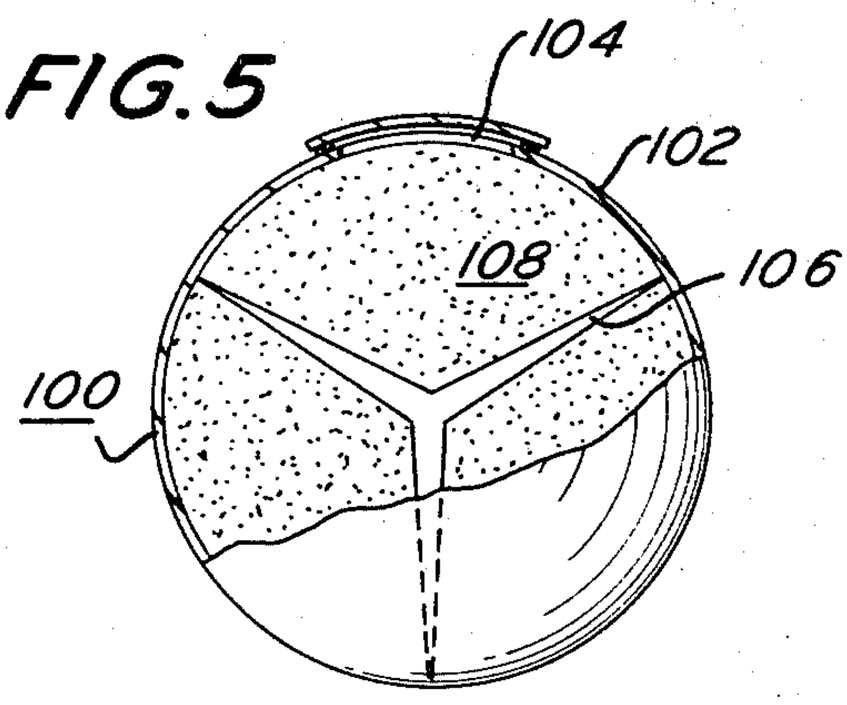

FIG. 6

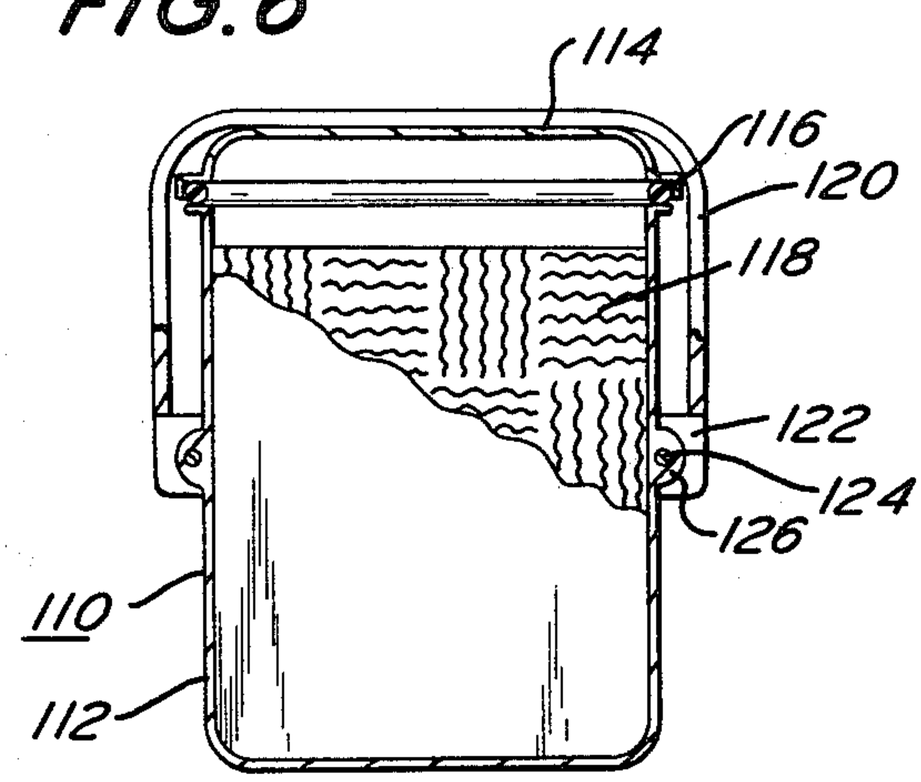

FIG. 7

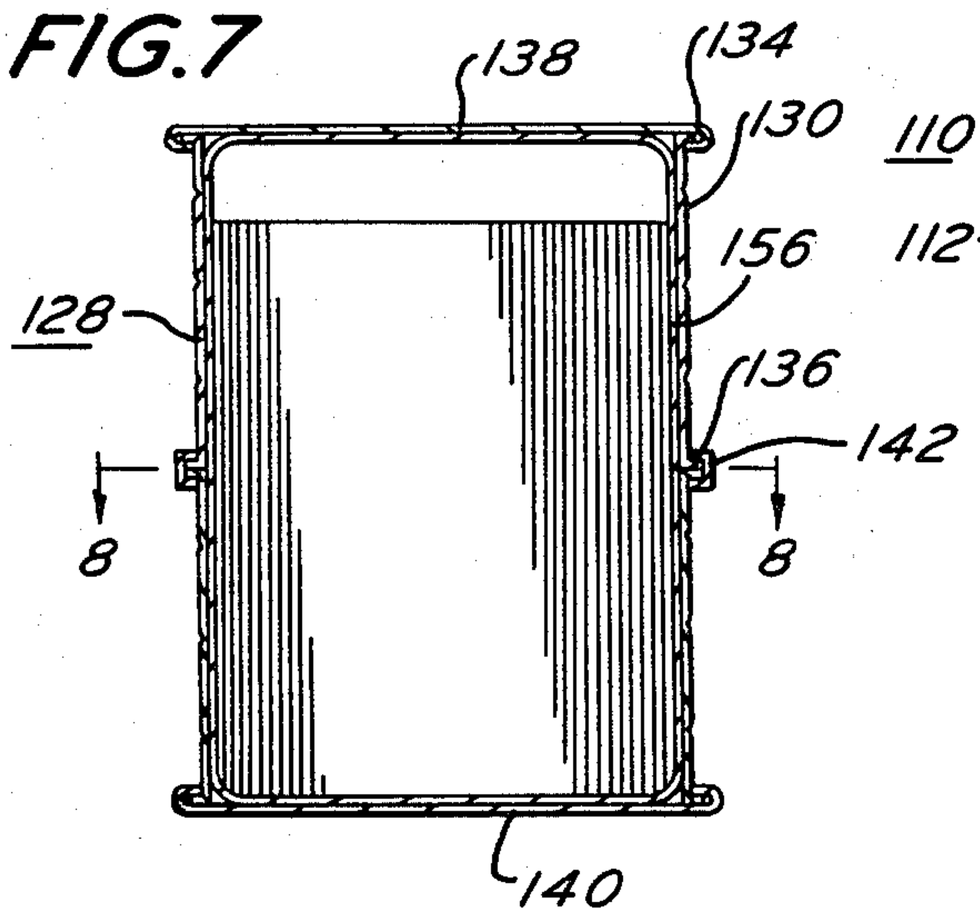

FIG. 8

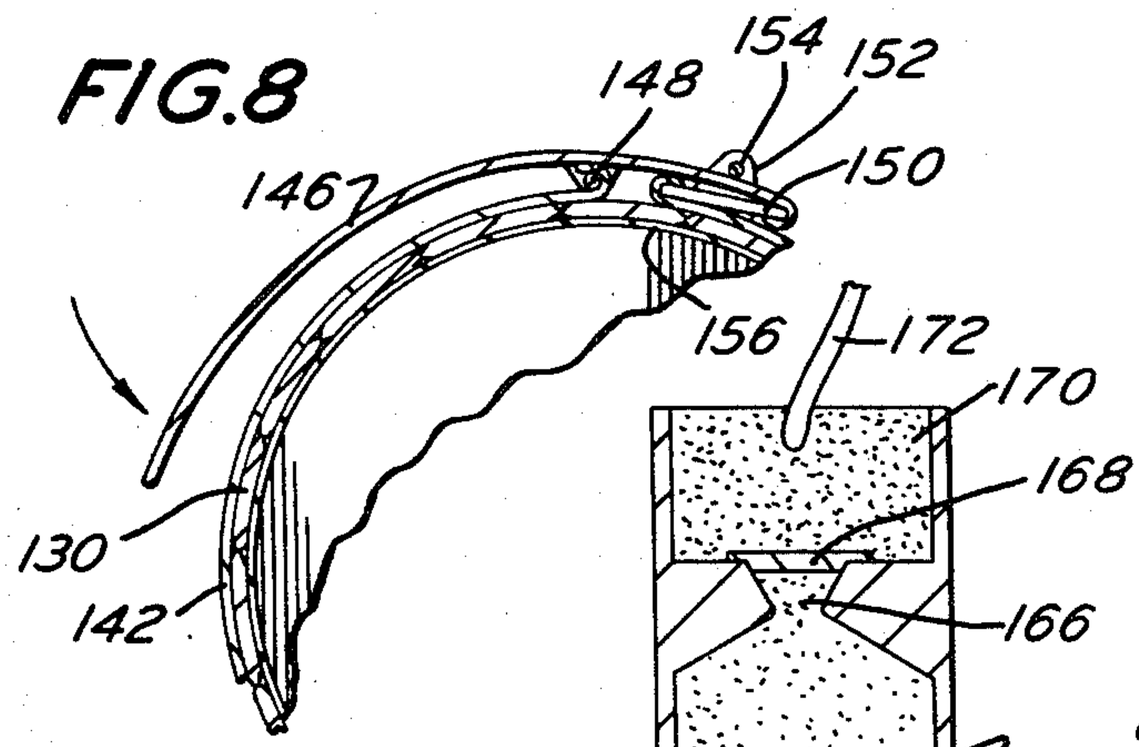

FIG. 10

FIG. 9

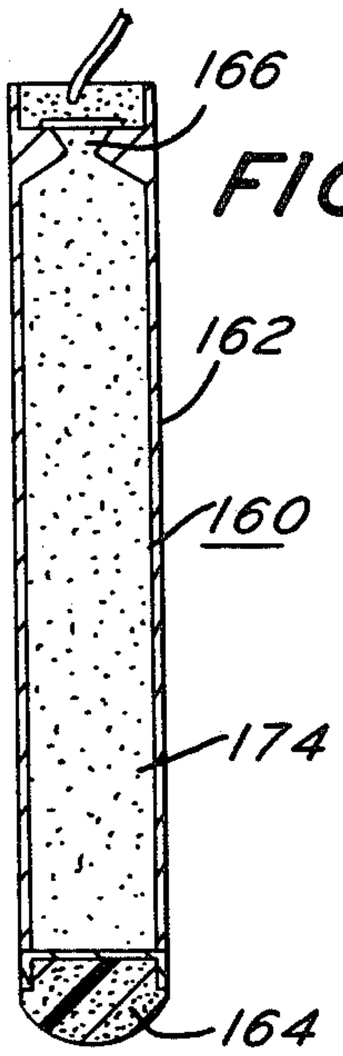

INVENTOR
WILLIAM B. TARPLEY, JR.
CHARLES DANA McKINNEY, JR.
BY Seidel & Gonda

ATTORNEYS.

United States Patent Office

3,402,665

Patented Sept. 24, 1968

1

3,402,665

NONPYROTECHNIC DISSEMINATOR

William B. Tarpley, Jr., West Chester, Pa., and Charles Dana McKinney, Jr., Wilmington, Del., assignors to Aeroprojects, Incorporated, West Chester, Pa., a corporation of Pennsylvania

Filed Aug. 15, 1966, Ser. No. 572,473

14 Claims. (Cl. 102—65)

ABSTRACT OF THE DISCLOSURE

Disseminators for discrete particulate material, such as finely divided powders, and leaflets, wherein the material is propelled from a container by gasification of a gelled liquefied gas. The particulate material comprises from 30 to 70 volume percent of the composition within the container. The container includes means coupled to it whereby the container may be opened to permit ejection of its contents.

The present invention is directed to a nonpyrotechnic disseminator, and more particularly to devices which may be used for discharging finely divided powders, leaflets and other solids over a large area by the dispensing action of the gasification of a gelled liquefied gas.

There are numerous situations in which solids, such as in the form of finely divided solids or leaflets, must be dispensed over a wide area, yet cannot be so-dispensed by the use of explosive charges. By way of example, the handling of mobs with teargas powders should be effected without the use of explosive charges. Moreover, in many mob-control and other police situations, the dissemination of vomit gas powders should likewise be accomplished without any lethal risk arising from the use of explosive charges.

Moreover, it is desirable to dispense many markers, such distress signal markers, staining materials and the like over a wide area, without the necessity for using explosive charges. Thus, explosive charges may adversely affect such markers and staining materials, or may lead to a substantial risk in handling and in usage.

In addition, there are many situations wherein finely divided paper leaflets or the like must be dispensed over a wide area. Such leaflets cannot be subjected to the action of explosive charges.

A problem with the dissemination of such leaflets arises from their tendency to adhere together when tightly stacked.

This invention has as an object the provision of a nonpoyrotechnic disseminator.

This invention has as another object the provision of a nonpyrotechnic disseminator which achieves dissemination of solids, such as solids in the form of powders or leaflets, over a wide area.

This invention has as another object the provision of a disseminator which may be safely stored, handled and used.

Other objects will appear hereinafter.

For the purpose of illustrating the invention there is shown in the drawings forms which are presently preferred; it being understood, however, that this invention is not limited to the precise arrangements and instrumentalities shown.

Referring to the drawings, wherein like reference characters refer to like parts:

FIGURE 1 is a vertical sectional view of an embodiment of the nonpyrotechnic disseminator of the present invention.

FIGURE 2 is a plan view, looking down from above, of the nonpyrotechnic disseminator of FIGURE 1.

2

FIGURE 3 is a cross-sectional view taken on line 3—3 of FIGURE 1.

FIGURE 4 is a vertical sectional view of another embodiment of the nonpyrotechnic disseminator of the present invention.

FIGURES 5 to 7 are sectional views of other embodiments of the nonpyrotechnic disseminator of the present invention.

FIGURE 8 is a partial horizontal cross-sectional view of the embodiment shown in FIGURE 7, showing details of the means for opening the disseminator.

FIGURE 9 is a longitudinal cross-sectional view of still another embodiment of the nonpyrotechnic disseminator of the present invention.

FIGURE 10 is a detailed view showing a portion of the embodiment of the nonpyrotechnic disseminator of FIGURE 9.

FIGURE 11 is a vertical sectional view of another embodiment of a nonpyrotechnic disseminator.

Referring to FIGURE 1, the disseminator **10** comprises the shell **12** within which is disposed the block **14**. The block **14** contains a central bore **16** within which is disposed the firing pin **18**.

The firing pin **18** comprises the finger grip **20** at the top end of the pin member **22** and the frusto-conical head **24** at the bottom end of the pin member **22**.

The firing pin **18** is guided within the central bore **16** by the O-ring **26**, and by the frusto-conical head **24**. Thus, the O-ring **26** is disposed within an O-ring groove located at the top portion of the block **14**. The uppermost end **28** of the block **14** comprises a stop shoulder.

Six capsules **30**, **32**, **34**, **36**, **38** and **40** are disposed within the block **14**. Each capsule comprises a cylinder of teargas powder and of gelled liquefied gas, such as the formulation set forth below in Example **1**. The base of each of the capsules **30**, **32**, **34**, **36**, and **38** and **40** is reinforced and is disposed against the inner face of the shell **12**. The innermost end of each of the capsules **30**, **32**, **34**, **36**, **38** and **40** comprises a diaphragm, such as a metal foil diaphragm, which may be ultrasonically ring welded or otherwise joined to the capsules. Such diaphragm faces the needles **42**, **44**, **46**, **48**, **50** and **52**, which are radially disposed in bores **54**, **56**, **58**, **60**, **62** and **64**, which communicate with the central bore **16**. Each of the needles **42**, **44**, **46**, **48**, **50** and **52** are hollow.

It will be seen from FIGURE 2 that the innermost ends of the needles rest against the pin member portion of the firing pin **18**.

The firing pin **18** is engaged with a spring-urged ball plunger **66**. The ball head of the plunger **66** may be cammed into circular grooves in the wall of the firing pin **18**, so that the ball plunger functions as a click or detent.

The O-ring **26** provides an effective seal to the uppermost end of the disseminator **10**.

In useage, the user grasps the finger grip **20**, and commences to pull it away from the shell **12**. When the frusto-conical head **24** engages the needle **42** it urges the same through the diaphragm in the capsule **30**. The puncturing of the diaphragm of the capsule **30** results in the gasification of the gelled liquefied gas within the capsule **30**, and the powder contents within the capsule **30** issues rapidly outwardly propelled by the gasification of the liquefied gas. The issuance of such powder inventory from the capsule **30** is through the opening **68** at the lower end of the central bore **16**.

The ball plunger **66** enables the user to discharge the disseminator in stages, since the seating of the ball plunger **66** in the semicircular grooves in the firing pin **18** will indicate to the user when each capsule is being punctured. In an emergency situation, the user can rapidly pull the firing pin out for its entire length and discharge the entire contents of the disseminator **10**.

In the disseminator **70** shown in FIGURE 4, very small explosive charges are used to rupture the seams on the container forming the disseminator. However, the gasification of the liquefied gelled gas effects the dispensing of the contents of the disseminator.

The disseminator **70** comprises the container **72**, which may be of conventional can construction. In the top end wall **74** of the container **72** there is positioned the firing mechanism designated generally as **76**.

The firing mechanism **76** comprises the safety handle **78** which is normally locked in nonactuatable position by the safety pin **80** which extends through both the ear **82** of safety handle **78** and the firing mechanism head **84**. The safety pin **80** is provided with a finger grip (not shown) which enables the safety pin **80** to be pulled from its disposition within the ear **82** and the firing mechanism head **84**.

The safety handle **78** retains the firing pin **86** in nonactuatable position. Thus, the firing pin **86** is spring-urged by the spring **88** in a clockwise direction. However, in the disposition shown in FIGURE 4, the safety handle **78** keeps the firing pin **86** away from the primer **90**. The primer is in communication with the pyrotechnic delay column **92**. Such pyrotechnic delay column may comprise a conventional fuse. The pyrotechnic delay column **92** engages the explosive charge **94**. The explosive charge **94** is a very small one, and need have only sufficient strength to rupture the container **72**.

The contents **96** of the container **72** comprises finely divided powder disposed within a gelled liquefied gas, such as one of the lachrymator mixtures of Examples 1 through 3 set forth below.

In use, the user pulls the firing pin **86** from its engagement with the ear **82** and the firing mechanism head **84**. The user can still retain the safety handle **78** in the disposition shown in FIGURE 4 by gripping the same. However, upon the hurling of the container **72** the safety handle **78** flies upward due to the spring-urging of the spring **88**. The firing pin **86** ignites the primer **90**. The pyrotechnic delay column furnishes a time delay prior to exploding the explosive charge **94** which ruptures the container **72**.

Upon the rupturing of the container **72** the gelled liquefied gas in container **72** is rapidly gasified and dispenses the contents **96** in all directions.

The disseminator **70** is an omnidirectional disseminator, as the contents **96** are discharged in all directions on the rupturing of the container **72** (unlike the controlled directional dissemination which results from the use of the disseminator **10** of FIGURES 1 through 3).

The disseminator **100** of FIGURE 5 is another omnidirectional disseminator, and spews its contents in all directions. The disseminator **100** comprises a spherical container **102** formed of thin walled metal, such as aluminum, with pressure containing capability. The container **102** is provided with a fill opening **104** sealed by a welded closure, such as a closure that has been ultrasonically ring welded to the spherical container **102**.

A puncturing means **106** comprising a sharp pointed metal spider is disposed within the spherical container **102** (the spherical container **102** may be formed from two hemispheres, with the puncturing means **106** disposed within the same prior to the welding together of the hemispheres).

The contents **108** comprising finely divided powders disposed within a gelled liquefied gas are contained within the container **102**.

In use, the container **102** is hurled against a surface causing the spider **106** to rupture the container **102**. This results in the immediate gasification of the gelled liquefied gas, which dispenses the finely divided powder in all directions.

The disseminator **110** of FIGURE 6 comprises a directional disseminator. The disseminator **110** comprises the container body **112**, to which is applied the container cap **114**. A tight seal is secured between the container body **112** and the container cap **114** by the O-ring **116**.

The contents **118** of the disseminator **110** may be radar marker materials, or message disseminators, or fibers, such as those of Examples 22, 23 and 24 set forth below, which include a gelled liquefied gas. The contents **118** are under superatmospheric pressure, such as a pressure of the order of 100 to 125 pounds per square inch.

The C-clamp **120**, which is provided with lugs **122** holds the container cap **114** onto the container body **112**. Thus, a pyrofuse wire **124** extends through the ears **126** on the side of container body **112** and through the lugs **122** of the C-clamp **120**.

In order to dispense the contents **118** from the disseminator **110**, the pyrofuse wire **124** is heated. This causes the wire to melt and leads to its destruction. The internal pressure within the disseminator **110** pushes the container cap **114** away from the container body **112**. The gasification of the gelled liquefied gas within the container body **112** immediately ensues, whereby the contents **118** are discharged through the open mouth of the container body **112**. This results in the directional discharge of the contents **118**.

The disseminator **128** of FIGURE 7 comprises a disseminator for the distribution of leaflets or other flat materials, such as radar marker materials. The disseminator **128** comprises a generally cylindrical container body designated by **130**.

The container body **130** is defined by several longitudinally extending wall segments **132**. The wall segments **132** include outwardly extending hooked ends **134** and **136**. End sections **138** and **140** are disposed at opposite ends of the container body **130**, in engagement with the hooked ends **134**. An annular restraining band **142**, having a generally semicircular cross-section extends annularly of a container body **130**, in engagement with the hooked ends **136**.

As is perhaps best seen in FIGURE 8, a toggle mechanism is effective to hold the annular restraining band **142** in contact with the hooked ends **136**. Such toggle mechanism includes an actuating lever **146**, pivotably secured by means of a pin **148** to one end of the restraining band **142**. A toggle link **150** is pivotably secured to the other end of the restraining band **142**. Also, the toggle link **150** is pivotably secured to one end of the actuating lever **146**. A pair of upstanding ears **152** is secured to the restraining band **142** adjacent its other end. A safety pin **154** extends between the ears **152** in overlying relation to the actuating lever **146** to prevent operation of the mechanism.

Disposed within the container body **130** is a metal foil container **156**. It should be understood that the metal foil container, which may be fabricated by ultrasonic ring welding, is not strong enough by itself to maintain normal internal pressure. Thus, the above-described container body **130** serves to prevent rupture of the metal foil container **156**. Within the container **156** are contents **158**, which may comprise leaflets or other materials within a gelled liquefied gas.

In use, the safety pin **154** is removed, and the container **130** hurled against a surface, thereby causing deformation of the container body, and operation of the mechanism **144**. Accordingly, the metal foil container **156**, without the suport of the container body **130**, ruptures, thereby causing dissemination of the contents **158**.

The disseminator **160** of FIGURE 9 comprises a self-propelled disseminator, adapted to leave a trail of material. The disseminator **160** comprises a body **162** having at one end a foamed elastomer tip **164** and adjacent the other a nozzle **166**. The nozzle **166** is normally closed by a meltable plug **168** and is slightly recessed from the end of the body **162**. A primer **170** is packed around the meltable plug **168** and has a fuse **172** embedded therein.

The contents **174** of the disseminator **160** may be noxious substances, such as those of Examples 1 to 10 and 13

and 14, set forth below, or smoke or other markers as in Examples 11, 15 to 19 and 24, or a combination of both, such as Example 12.

In use, the disseminator **160** functions as a self-propelled rocket. Thus, the contents are expelled forcefully through the nozzle, and accordingly, function as a rocket propellant. The container moves forward and leaves a trail of material. The elastomeric tip **164** prevents injuries to persons hit by the disseminator. The dissemination **160** can also be fired from a gun, in which case the fuse and primer are ignited by the gun flash. Thus, the ejection of the material begins while the disseminator is already in flight.

The disseminator **176** of FIGURE 11 is somewhat similar to the disseminator **70**, previously described. Thus, the disseminator **176** comprises a container **178** of conventional can construction. The container **178** includes a top end wall **180** upon which there is positioned a firing mechanism designated generally as **182**. The firing mechanism **182** comprises a safety handle **184**, a safety pin **186**, and a firing pin **188**, all similar to those previously described. Also, the firing mechanism **182** includes a primer **190** and a pyrotechnic delay column **192** disposed in a bore **193**. At the end of the bore **193** and in contact with the delay column **192** is a solder disk **194**.

In operation, the removal of the safety pin **186** and the safety handle **184** results in actuation of the firing pin **188**, and hence, ignition of the primer **190**. Upon burning of the pyrotechnic delay column to its end, the solder disk **194** is melted, and the internal pressure in the container **178** forces the contents **196** through the passage formerly occupied by the primer and delay column. Thus, the disseminator **176**, unlike the disseminator **70**, is unidirectional, and accordingly, can be readily aimed.

As used hereinafter, the bore **193** of the disseminator **176**, as well as the opening **68** of the disseminator **10**, may be referred to as nozzles.

The present invention comprehends that the solid matter to be disseminated be disposed within a gelled liquid. It is necessary for the purposes of the present invention that the solid matter not be appreciably soluble in the gelled liquid.

At least a part of the gelled liquid must comprise a liquefied gas, and in some embodiments all of the gelled liquid may comprise a liquefied gas. The relative proportion of liquefied gas to the remainder of gelled liquid is dependent upon the physical properties of the liquefied gas and of the gelled liquid. Where the liquefied gas is relatively highly volatile, namely where it has a relatively high vapor pressure, and where it has a relatively high expansion ratio, as in the case of liquefied trifluorobromomethane or liquefied propane, the portion of the gelled liquid which consists of the liquefied gas may be relatively small, such as of the order of 5 weight percent of the total composition. The present invention comprehends compositions in which all of the gelled liquid consists of liquefied gas. Such compositions have primary utility where the liquefied gas is one having a relatively low volatility, or in which a high propellent force is needed for a particular use application, or where the liquefied gas has the property of augmenting the functionality of the finely divided powder as in the case of liquefied Freon being used in a fire extinguisher.

The present invention comprehends compositions consisting of from 30 to 70 volume percent of finely divided powder, with the remainder being gelled liquid. Normally, there is no advantage in having the powder percentage below about 30 volume percent, since the desired properties of the composition are to a large degree dependent upon the amount of powder present in the composition. Generally, when the powders are present above about 70 volume percent, the flow properties and handling characteristics of the composition are adversely affected. Powders used with the present invention are generally in the range of 1 to 100 microns in size.

The compositions of the present invention include a gelling agent, which should be present in an amount sufficient to effect gelling of all of the liquid present in the composition. The gelling agent should be one which has a gelling efficacy such that no more than about 5 weight percent of the composition need be gelling agent. In some compositions, the finely divided powder possesses gelling characteristics, and the amount of gelling agent which need be present in such compositions may be reduced. Generally, at least about one-half weight percent of gelling agent must be present to achieve satisfactory gelling of the liquid portion of the composition. A satisfactory gelling agent is the pyrogenic silica sold under the trademark "Cab-O-Sil H5" by Godfrey L. Cabot, Inc., of Boston, Mass.

Examples of gelling agents include: pyrogenic silica, namely finely divided silica particles derived from the combustion of silicon tetrachloride, such materials being commercially available as gelling agents under the trademark "Cab-O-Sil"; carbon black having a clean microsurface and a high degree of structure with said structure being internal with particles smaller than 25 millimicrons as measured by an electron microscope and presenting a ratio of BET surface as determined by nitrogen adsorption measurement to electron microscope surface of between 2½ and 6 and with larger particles being external, namely possessing persistent particular chain formation observable in the electron microscope after mulling by the procedure of Ladd;[1] pyrogenic aluminum oxide derived from the combustion of aluminum trichloride; carboxymethyl cellulose, sulphonated polyvinyl toluene; carogeenin, and guar, etc. A suitable pyrogenic alumina is available under the trademark "Alon C."

By "gelled liquid" as used herein is meant a material possessing a yield stress sufficiently high to prevent flow under low forces such as gravitation, namely a yield stress of 200 dynes per square centimeter, is adequate.

In some situations the addition of a surfactant, as in the concentration of 0.1 to 1 weight percent based on the amount of gelled liquid present is helpful. Examples of suitable surfactants include: sorbitan trioleate; polyethylene glycol ether of hydroabietyl alcohol; polyoxyethylene sorbitan monooleate; diethylene glycol laurate; sulfonated castor oil; triethanolamine monooleate.

The presence of the surfactant improves wetting of the finely divided powders and increases flowability.

The function of the gelled liquid is to keep the particles making up the finely divided powder from each other so that they do not adhere to each other, as by sintering or by Van der Waals attraction.

The compositions of the present invention are kept within containers of the type described above, with such containers having a structural strength sufficient to withstand the pressures developed under storage and use temperatures. Generally, these pressures will be of the order of 15 to 125 p.s.i.g.

The chemical nature of the powders to be used in the compositions of the present invention will vary depending upon the use to which the powders may be put. Unlike prior dry powder dispensing compositions, it is not necessary to include flow promoting additives and antiagglomerants in the finely divided powders of the present invention. Thus, no useful purpose is served in the present invention by the addition of such flow promoting additives and/or antiagglomerants.

The following examples illustrate compositions for dissemination in accordance with the present invention.

---

[1] Rubber Age, volume 57, June 1945, page 299.

Lachrymator compositions

Example 1

Component:	Parts by weight
Chloroacetophenone, preground at low temperature	67.0
Perfluorocyclobutane	32.0
"Cab-O-Sil H5"	1.0

Example 2

Chloroacetophenone, mulled in perfluorocyclobutane	67.0
Perfluorocyclobutane	31.0
"Alon-C"	2.0

Example 3

Chloroacetophenone containing approximately 8% magnesium oxide, mulled in perfluoropropane	67.0
Perfluoropropane	32.0
"Cab-O-Sil H5"	1.0

Eye and respiratory irritant

Example 4

Black pepper, ground	50.0
Nitrous oxide	48.5
"Cab-O-Sil H5"	1.5

Offensive odor compositions

Example 5

Skatole	45.0
Perfluorocyclobutane	52.0
"Alon-C"	3.0

Example 6

Putrescine	45.00
Difluorodichloromethane	53.5
"Cab-O-Sil H5"	1.5

Bitter substance

Example 7

Sucrose octoacetate	50.0
Difluorodichloromethane	47.0
"Alon-C"	3.0

Eye and respiratory irritant with offensive odor

Example 8

Black pepper, ground	30.0
Cadaverine (liquid at room temperature)	20.0
Perfluorocyclobutane	48.5
"Alon-C"	1.5

Emetic composition

Example 9

Diphenylaminochloro arsine	60.0
Perfluoropropane	38.8
"Cab-O-Sil H5"	1.2

Emetic and lachrymator composition

Example 10

Diphenylaminochloroarsine	30.0
Chloroacetophenone, ground at low temperature	30.0
Perfluorocyclobutane	38.8
"Cab-O-Sil H5"	1.2

Nonstaining marker composition (visible in ultraviolet light)

Example 11

Cadmium sulfide-strontium sulfide mixture	70.0
Difluorochloromethane	28.2
"Alon-C"	1.8

Staining marker and lachrymator composition

Example 12

Crystal violet	30.0
Chloroacetophenone, ground at low temperature	35.0
Perfluorocyclobutane	33.5
"Cab-O-Sil H5"	1.5

Foam lachrymator composition

Example 13

Chloroacetophenone, mulled in perfluoropropane	60.0
Silicone rubber prepolymer	5.0
Perfluorocyclobutane	33.9
"Alon-C"	2.1

Foam composition with offensive odor

Example 14

Putrescine	40.0
Silicone rubber prepolymer	5.0
Dichlorodifluoromethane	53.3
"Cab-O-Sil H5"	1.7

Red smoke composition

Example 15

1-Methyl anthraquinone	60.0
Difluorochloromethane	38.8
"Cab-O-Sil H5"	1.2

White smoke composition

Example 16

Titanium dioxide	70.0
Propane	29.9
"Cab-O-Sil H5"	0.9

Black smoke compositions

Example 17

Carbon black (furnace black)	60.0
Butane	37.6
Carbon black (high color channel black)	2.4

Example 18

Manganese dioxide	70.0
Liquified ammonia	28.2
Carbon black (high color channel black)	1.8

Metallic smoke compositions

Example 19

Aluminum flake	35.0
Butane	65.0

Green smoke composition

Example 20

Chromic oxide	70.0
Butane	28.2
"Alon-C"	1.8

Violet smoke composition

Example 21

1,4-diamino-2,3-dihydroanthraquinone	48.0
1-methyl anthroquinone	12.0
Propane	38.8
"Cab-O-Sil H5"	1.2

Radar marker composition

Example 22

Aluminum-coated Mylar film, chopped into thin strands of appropriate length	35.0
Propane	63.0
"Cab-O-Sil H5"	2.0

Radar marker or message disseminator composition

Example 23

Mylar film printed with patterned electromagnetic reflective material or printed with messages	30.0
Butane	62.8
"Alon-C"	4.2

Chemiluminescent material composition

Example 24

DuPont PR-155 chemical light material chopped under inert (Argon) atmosphere	30.0
Perfluorocyclobutane	67.9
Cab-O-Sil H5"	2.1

The present invention may be embodied in other specific forms without departing from the spirit or essential attributes thereof and, accordingly, reference should be made to the appended claims, rather than to the foregoing specification as indicating the scope of the invention.

We claim:

1. Apparatus for disseminating particulate material comprising a closed container, a composition in said container comprising a gelled liquid having a yield stress of at least 200 dynes per square centimeter, particulate material disposed within and substantially insoluble in said gelled liquid, said particulate material comprising from 30 to 70 volume percent of said composition, at least a portion of said gelled liquid comprising a liquefied gas so that vaporization of said liquefied gas creates a positive pressure inside said container, and means coupled to said container whereby said container may be opened to permit ejection of its contents.

2. Apparatus in accordance with claim **1** wherein said container is in the form of an elongated tubular projectile having a fixed closure at one end and a nozzle at the other end, said means for opening said container comprising a heat fusible plug member normally blocking said nozzle, a combustible primer adjacent said plug member, and means coupled to said primer for igniting the same, burning of said primer being effective to melt said plug and thereby open said container.

3. Apparatus in accordance with claim **1** wherein said gelled liquid consists of gelled liquefied gas.

4. Apparatus in accordance with claim **1** wherein said particulate material comprises particles containing printed indicia.

5. Apparatus in accordance with claim **1** wherein said particulate material comprises radar opaque particles.

6. Apparatus in accordance with claim **1** wherein a plurality of said containers are disposed in a block, a central bore in said block, a plurality of bores in said block extending outwardly from and in fluid communication with said central bore spaced at positions therealong, said containers being disposed in said outwardly extending bores, said means for opening said container comprising rod means movable axially of said central bore, and means responsive to movement of said rod means for piercing each container so that the contents of each container are ejected into said central bore.

7. Apparatus in accordance with claim **1** wherein said container is a can member, and said means for opening

said container comprises an explosive charge for rupturing said can member.

8. Apparatus in accordance with claim **1** wherein said container is a vessel having walls sufficiently thin to permit deformation upon impact with a rigid surface, said means for opening said container comprising, a rigid spider member having sharply pointed ends disposed in said container with its ends in contact with the inner surface of the container so that said ends are adapted to pierce the container upon impact of the apparatus with a rigid surface.

9. Apparatus in accordance with claim **1** wherein said container comprises a container body and a container cap, means clamping said container cap to said container body, said means clamping said container cap to said container body being secured by a pyrofuse wire so that melting of said wire releases said clamping means.

10. Apparatus in accordance with claim **1** wherein said container comprises an inner container member having tensile strength insufficient to retain said particulate material and gelled liquid, and an outer container member, said outer container member comprising a plurality of assembled sections and restraining means for maintaining said sections in assembled relation, said means for opening said container comprising means for releasing said restraining means.

11. Apparatus in accordance with claim **1** wherein said container includes a nozzle, said means for opening said container causing said contents to flow through said nozzle.

12. Apparatus in accordance with claim **1** wherein said container includes a bore, said means for opening said container comprising a primer and a pyrotechnic delay column, said primer and pyrotechnic delay column being disposed in said bore, and a plug of meltable material at the end of said pyrotechnic delay column and closing said bore so that burning of said delay column melts the plug to permit ejection of the contents of the container.

13. Apparatus in accordance with claim **12** including a spring-urged pin for igniting said primer, and a safety handle for maintaining said pin in an inactive position.

14. Apparatus in accordance with claim **2** wherein said one end includes an elastomeric tip.

References Cited

UNITED STATES PATENTS

1,548,693	8/1925	Weaver	102—65
1,878,489	9/1932	Goss	102—65
2,079,008	5/1937	Goss	102—65
2,112,758	3/1938	Blacker	102—49.3
2,294,415	9/1942	McBride	102—65
2,476,302	7/1949	Jeppson	102—34.4
3,014,844	12/1961	Thiel et al.	222—394 X
3,049,080	8/1962	Schermuly	102—34.4
3,068,472	12/1962	Dell'aria	222—394 X
3,134,720	5/1964	Green et al.	222—394 X
3,242,270	3/1966	Flanagan	102—65 X
3,269,313	8/1966	Willmann et al.	102—49.7

FOREIGN PATENTS

705,643	3/1965	Canada.

BENJAMIN A. BORCHELT, *Primary Examiner.*

W. KUJAWA, *Assistant Examiner.*