Sept. 24, 1968 J. E. CRAMER 3,402,664

SHOT HOLDER AND WAD FOR SHOT SHELLS

Filed Sept. 13, 1966

Fig. 1

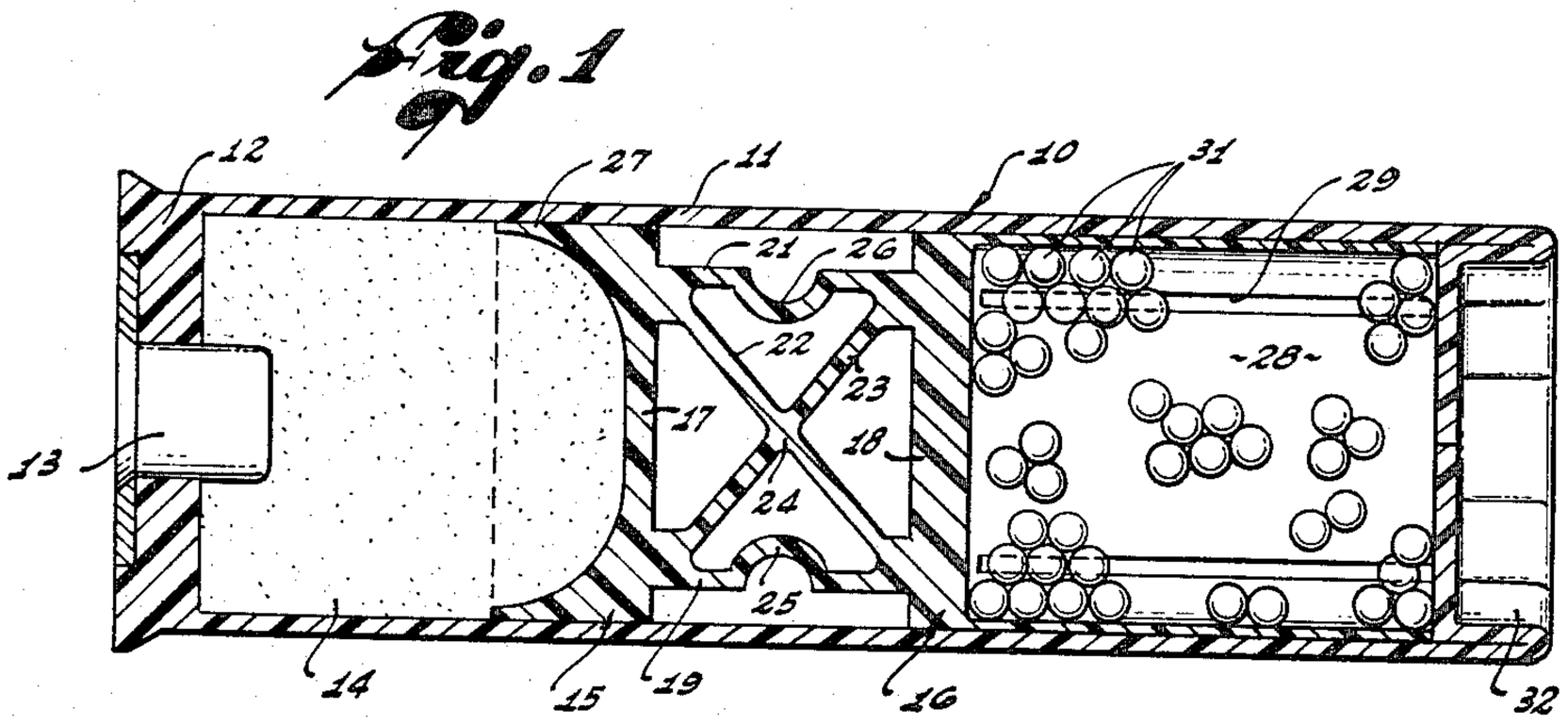

Fig. 2

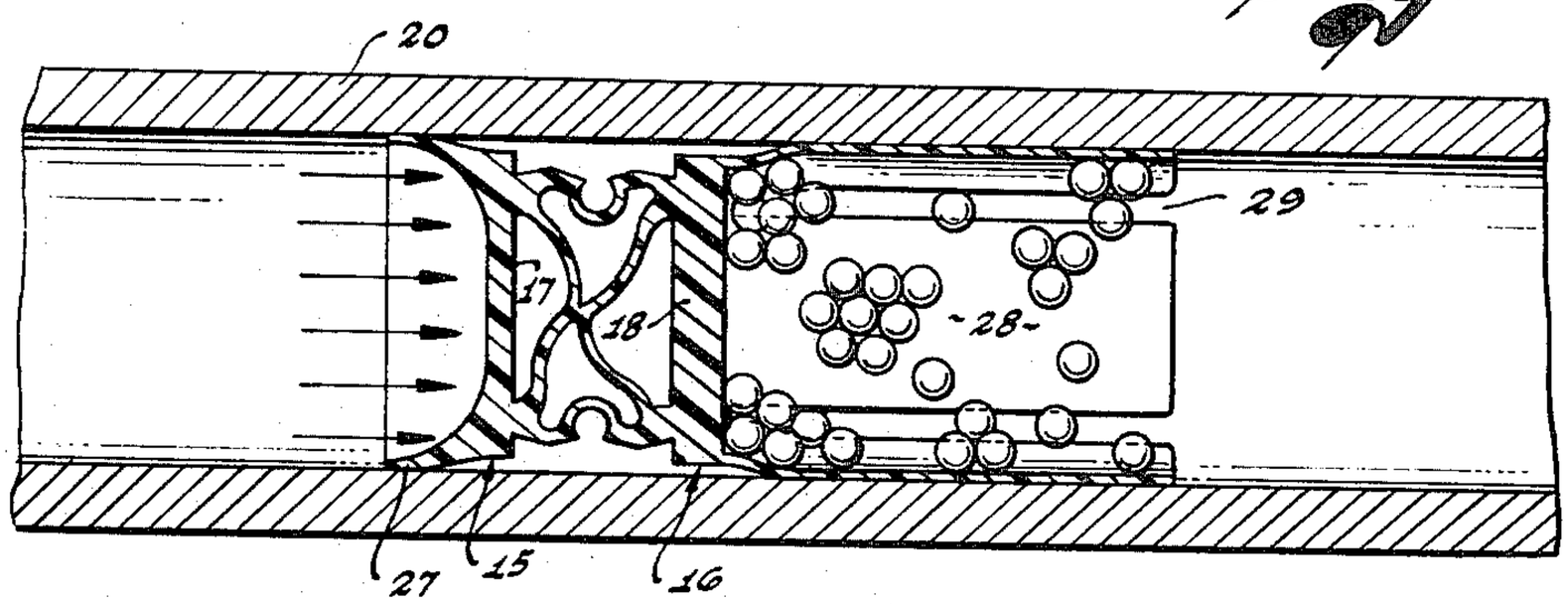

Fig. 4

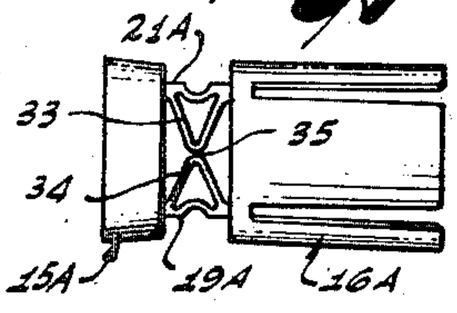

Fig. 3

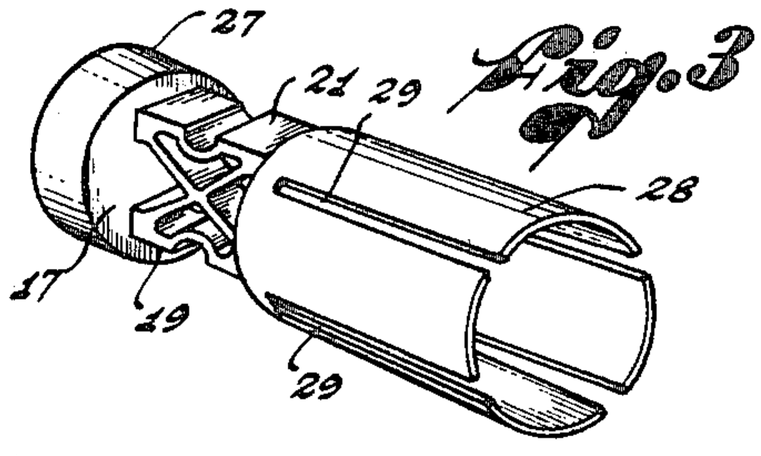

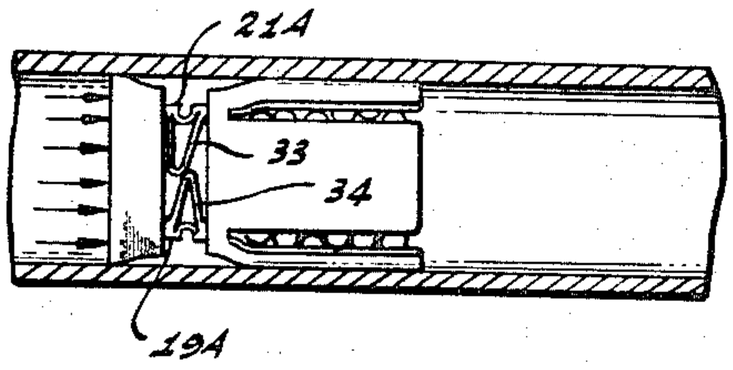

Fig. 5

INVENTOR
JOHN E. CRAMER
BY Fulwider, Patton, Rieber, Lee, and Utecht
ATTORNEYS

United States Patent Office

3,402,664

Patented Sept. 24, 1968

3,402,664

SHOT HOLDER AND WAD FOR SHOT SHELLS

John E. Cramer, 9012 Arrington Ave.,
Downey, Calif. 90240

Filed Sept. 13, 1966, Ser. No. 579,159
7 Claims. (Cl. 102—42)

ABSTRACT OF THE DISCLOSURE

A shot holder and wad unit for shot shells having a forward, cup-shaped container for shot pellets with longitudinally slotted walls and a rear disc-like wad with a rearwardly extending sealing skirt. The pellet container bottom and rear wad disc are interconnected by diagonal struts of substantial width presenting a substantially X-frame configuration and having outside longitudinally extending walls interconnecting the ends of the X-frame and of substantially the same width, the outside walls having their central portions bowed inwardly to control their collapse. The unit is formed of a flexible and deformable plastic material, such as polyethylene. The X-frame may be disconnected at its intersection to present a pair of separate V-shaped members extending generally transversely and inwardly of the unit from the outside walls. A shot shell employing this unit is illustrated and described.

It has been proposed to make one-piece shot holders and wads for shot shells of a flexible deformable material such as a molded plastic resin, for example polyethylene. The wad is spaced from the shot holder and connected thereto by collapsible walls.

The plastic shot holders protect the shot pellets from abrasion against the gun barrel, protect the pellets against deformation by being forced against the hard surface of the barrel, carry the shot pellets as a concentrated unit out of the gun barrel, and separate readily from the shot pellets after they leave the barrel. The wad portion is provided with a skirt which deforms outwardly against the gun barrel to inhibit passage of the expanding gases from the burning powder charge past the wad. The collapsible walls between the wad and the shot holder are intended to cushion the impact of the expanding gases from the powder charge on the shot pellets to prevent the deformation thereof.

Such shot holders and gas seal wads are not broadly novel with applicant, being shown, for example, in the patents to Daubenspeck et al. No. 3,099,958, Rybak No. 3,180,265 and Foote et al. No. 3,215,076, and exemplified in the "Double A" loads of Winchester-Western. A comprehensive chart and sample showing of shot shell wads appears at pages 28–30 of The American Rifleman of February 1966. While these constructions recognize the problems of shot shell loads and purport to improve performance to greater or lesser degree, each of them fails to reach ideal performance in one or more respects. This is particularly true with respect to the collapse of the interconnecting walls between the wad and the shot holder, which it is desired shall be accomplished without tilting of the wad which might break the gas seal and cause transverse deflection of the wad and possibly the shot holder, not only within the gun barrel but also to the extent of interfering with the trajectory of the shot as it leaves the barrel. Also the walls interconnecting the wad and the shot holder should collapse sufficiently to cushion the shock of the initial accelerating force of the expanding gas upon the pellets but should be stiff enough to prevent the wad and holder engaging solidly therethrough.

While the gas pressure will expand the skirt of the wad into engagement with the gun barrel to form a gas seal,

it is also desirable that the skirt be tapered outwardly and rearwardly to a greater diameter so that its own resilience and memory forces it into tight engagement with the shot shell casing wall to prevent initial leak of the gases therepast. Any gases escaping past the wad will not only lessen the muzzle velocity of the slot leaving the gun barrel, but will also pass through the shot in the holder to disturb the short pattern.

It is therefore an object of the present invention to provide improved shot shell ammunition for shotguns.

Another object of this invention is to provide a new and improved shot holder and wad unit for shot shells.

Another object of this invention is the provision of a new and improved shot holder and wad unit for shot shells which may be used not only for factory loads but for reloading of shot shell casings.

A further object of the present invention is the provision of a new and improved shot holder and wad combination connected by collapsible means which acts with increased sealing reliability and with less distortion of the shot pellets, and which gives a more consistent trajectory and pattern to the pellets.

A still further object of this invention is the provision of an improved shot holder and wad unit for shot shells, including a collapsible X-strut interconnection between the wad and holder which absorbs the initial impact of the expanding gases to lessen the shock to the shot pellets, while preventing solid engagement between the wad and holder.

Yet another object of this invention is the provision of a new and improved shot holder and wad unit in accordance with the preceding object, including guiding and strengthening walls outside of the X-strut separating the wad and shot holder.

Another object of this invention is the provision of an improved shot holder and wad unit in accordance with each of the preceding objects in which the wad is provided with an extended skirt which tapers outwardly toward the rear, and when compressed to cylindrical shape has a memory to return to its tapered configuration to establish a tight seal and in which the skirt is deformable outwardly under the pressure of the expanding gas to increase the sealing effect.

These and other objects and features of the invention will be apparent to those skilled in the art from the following specification and the appended drawings in which:

FIGURE 1 is a longitudinal sectional view through a shot shell according to the present invention;

FIGURE 2 is a longitudinal sectional view of a gun barrel showing the shot holder and wad as they move through the barrel under the force of the expanding gases from the power charge;

FIGURE 3 is a perspective view of the shot holder and wad unit according to the present invention as exemplified in FIGURES 1 and 2;

FIGURE 4 is a side elevational view of a modified form of a shot holder and wad unit according to the present invention; and

FIGURE 5 is a view similar to FIGURE 2 but showing the operation of the shot holder and wad unit modification of FIGURE 4.

The shot holder and wad unit of the present invention in the embodiment of FIGURES 1–3 comprises a wad **15** having a base disc **17** and a shot holder **16** having a base disc **18**. The discs **17** and **18** are spaced apart by diagonal struts **22** and **23** intersecting at **24** in a substantially X-frame configuration and by longitudinally extending outside walls **19** and **21** joining the outer ends of the X-frame struts and likewise extending between the base discs **17** and **18** adjacent opposite edges thereof. The diagonal X-frame struts **22** and **23** and the outside

walls **19** and **21** are of substantial transverse width, as shown more particularly in FIGURE 3, thereby rigidifying the base discs **17** and **18** against relative tilting, as well as strengthening the walls and struts against collapse.

The central portions of the walls **19** and **21** are internally bowed at **25** and **26**, respectively, to control the collapse of the walls in the initial impact of the expanding gases from the powder charge against the back face of the wad **15**.

The back face of the wad **15** is concave toward the powder charge **14** to thereby provide an integral skirt **27** which preferably flares outwardly toward the rear as shown in FIGURE 3, so that when compressed within the casing **11** the back end of the skirt presses outwardly in good initial sealing relation with the inside surface of the casing **11**.

Forwardly of the base **18** of the shot holder **16** extends an integral cylindrical cup container **28** which is relatively thin-walled and slotted longitudinally at **29** to provide a plurality of flaps which hold the shot pellets therein, as shown in FIGURES 1 and 2, but which readily peel backwardly, opening up like a clam, after the shot holder leaves the gun to thereby stop forward movement of the holder and wad very quickly due to air resistance and permit the shot pellets to move forwardly alone in their trajectory without interference from the holder. The shot pellets within the container **28** are shown at **31** and are held in the casing **11** by the inwardly folded or crimped end **32** thereof.

All of the elements of the shot holder and wad unit may be formed integrally by injection molding from a plastic resin such as polyethylene, which is flexible, deformable and somewhat elastic with a memory to return to its initial shape if deformed.

The operation of the shot holder and wad unit of the present invention in propelling the shot pellets from the gun barrel will be apparent from the above description, and the illustration of FIGURES 1 and 2 of the drawing. The shot shell before ignition is shown in FIGURE 1, with the shot **31** held in the container portion **28** of the shot holder **16**, with the wad **17** engaged with the powder charge **14** and with the wad and shot holder held in spaced relation by the walls **19**, **21** and the X-frame struts **22** and **23**.

When the powder charge **14** is ignited by the primer **13**, the expanding gases exert an initial abrupt force or impact on the back surface of the wad **15**. At this time the back end of the skirt **27** is firmly pressed against the inside wall of the casing **11** by the resilience of the tapered skirt which has been compressed into a cylindrical shape shown in FIGURE 1. There is therefore no initial loss of gas past the wad **15** and thereafter the pressure of the gas itself increases the seal by pressing the end of the skirt outwardly into even firmer engagement with the casing wall and later with the surface of the gun barrel. As the wad base **17** moves forwardly under the initial impact of the expanding gases from the burning powder charge, the walls **19** and **21** and the X-frame struts **22** and **23** collapse and cushion the impact of the expanding gases and the accelerating force thereof exerted on the shot holder **16** and the shot **31** therein. The manner in which the walls **19**, **21** and X-frame struts **22**, **23** collapse is indicated in FIGURE 2, wherein the bowed portions **25** and **26** determine the manner of and insure consistency in the collapse of the walls **19** and **21** and, together with the X-frame struts **22** and **23**, maintain the wad base disc **17** with its plane transverse to the axis of the shot shell and against tilting relative thereto as the wad moves forwardly.

The walls **19**, **21** and the struts **22**, **23** are desirably sufficiently stiff or strong so that they do not collapse into a solid connection between the base discs **17** and **18**, and the force applied to the shot holder **16** and the shot **31** therein is always through the cushion of the collapsed, but not solid, walls and struts. As the walls and struts

collapse, force is progressively applied to the shot holder **16** and the shot therein to overcome their inertia so they move forwardly with the wad **15** out of the shot shell casing **11** into the gun barrel **20**, as in FIGURE 2.

The expanding gas is now exerting a strong force on the skirt **27** of the wad **15** and presses it tightly against the interior surface of the barrel **20** to form an efficient seal thereat against loss of the propelling gases.

The partially collapsed walls **19**, **21** and X-frame struts **22** and **23** maintain the base discs **17** and **18** of the wad and shot holder in parallel relation and with their planes transverse to the axis of the gun barrel against any substantial tilting therein.

The shot pellets **31** are initially moved and thereafter accelerated with a cushioned force which substantially prevents deformation of the pellets from the initial shock or impact of the expanding gases whose force is exerted on the pellets only through the cushioning effect of the collapsing walls **19**, **21** and struts **22**, **23**. This cushioning effect continues in the passing of the wad and shot holder through the gun barrel and some of the energy stored in the collapsed walls and struts will, by the resilient memory of the material, be returned to the shot holder and shot as they pick up speed through the barrel.

The shot pellets **31** will be held out of contact with the interior surface of the gun barrel **20** by the container portion **28** of the holder, which thereby prevents leading of the barrel, abrasion thereof by the shot, deformation of the shot against the hard surface of the barrel, and cushions the shot transversely by the deformable material of the walls of the container **28**. The shot pellets **31** are thereby held in a compact pattern as they leave the end of the gun barrel and are substantially of their originally spherical configuration so that they will maintain a tight flight pattern and a consistent trajectory in flight. As the shot holder leaves the gun barrel its forward movement is abruptly slowed by air engaging inside the flaps of the container portion **28** and opening them up like a clam shell to present high air resistance to continued forward movement of the holder. Its flight therefore stops quickly and the pellets **31** move forwardly without interference from the separating shot holder.

The modification shown in FIGURES 4 and 5 is quite similar to that shown in FIGURES 1–3 and operates in substantially the same manner. This form is more particularly adapted to a shorter shot shell where the spacing between the wad **15A** and the shot holder **16A** is less than in the exemplification of FIGURES 1–3.

In this modification the wad **15A** is separated from the shot holder **16A** by outer walls **19A** and **21A** of substantially the configuration of walls **19** and **21** but of shorter length. However, the central reinforcing struts are no longer fully connected as at **24**, but are substantially V-shaped in cross-section at **33** and **34** with the apexes of the V's extending inwardly to substantially the axis of the shot shell at **35**. The walls of the struts **33** and **34** thereby present an overall X-shape when unstressed but with the X disconnected. The walls **19A** and **21A**, and the struts **33** and **34** have substantially the same transverse width as the walls **19** and **21** shown in FIGURE 3.

The manner in which the wad **15A** and shot holder **16A** operate in projecting the shot pellets is shown in FIGURE 5 and is substantially the same as that shown in FIGURE 2 and described in connection therewith. The walls **19A** and **21A** collapse substantially the same as the walls **19** and **21**, likewise collapsing consistently and serving to guide and hold the bases of the wad and shot holder against tilting so that they remain substantially parallel and with their planes at right-angles to the axis of the shot shell and gun casing, as previously described. The manner in which the struts **33** and **34** collapse is shown in FIGURE 5, wherein the open ends of the V-struts are pressed together and their apexes displaced axially of the gun barrel.

Where the length of the shot shell is sufficient, the connected X-frame struts of the embodiment of FIGURES 1–3 are preferred, but for shorter arrangements, where less space can be provided between the wad and the shot holder, the disconnected struts of the modification of FIGURES 4 and 5 may provide better collapsing characteristics in absorbing the initial impact of the propelling gases. In either case the collapse is controlled so that the wad and shot holder base discs are maintained substantially parallel and with their planes at right-angles to the axis of the shot shell and the gun barrel, thereby preventing interference with the sealing characteristics of the wad and the distribution and directional characteristics of the shot pellets. At the same time the resistance to deformation of the connecting walls and struts is sufficiently strong to prevent complete collapse which would solidly connect the wad and shot holder. The controlled collapse of both of the exemplifications of the shot holder and wad unit of this invention also prevent any tendency of sidewise shift of the wad or shot holder within the gun barrel **20**. With sidewise shift and tilting prevented by the controlled collapse of the connection between wad and shot holder while avoiding rigid engagement therebetween, the unit of the present invention gives optimum performance in the maximum acceleration, lessened deformation of the shot pellets, and improved shot pattern and consistent trajectory.

It will be readily apparent that the shot holder and wad units of FIGURES 3 and 4 may be used in factory-loaded shot shells and that they are particularly useful in reloading since they minimize the number of parts which must be handled by the reloader, and thereby increases the efficiency and consistency of performance of the reloaded shot shells.

While certain preferred embodiments of the invention have been specifically illustrated and described herein it will be understood that the invention is not limited thereto, and as many variations will be apparent to those skilled in the art and the invention is to be given its broadest interpretation within the terms of the following claims.

I claim:

1. A shot holder and wad unit for shot shells comprising in prefired condition: a generally cup-shaped container for shot pellets, the base of said container constituting an integral disc whose plane is substantially at right-angles to the axis of the unit; a wad whose forward portion is in the form of a disc disposed substantially parallel to and spaced rearwardly of the disc bottom of said container; and diagonal struts interconnecting said wad and container discs and mounting them in spaced relation, said struts being integrally connected to and extending from adjacent one side edge of the container disc to adjacent the opposite side edge of the wad disc and from adjacent the opposite side edge of the container disc to adjacent the one side edge of the wad disc to present an

overall substantially X-frame configuration, said struts being flat and of substantial width and of a rigidity to collapse under the initial impact of the propelling gases of the charge but sufficiently rigid to prevent solid engagement between said wad and holder, said wad, holder and struts being formed of a flexible and deformable plastic material.

2. The shot holder and wad unit defined in claim **1** in which said diagonal struts are integrally interconnected across their longituinal mid-points into a closed X-frame configuration.

3. The shot holder and wad unit defined in claim **1**, including: a pair of longitudinally extending, outside walls adjacent the outer edges of said wad and container discs and substantially interconnecting the outer ends of said diagonal struts to rigidify and control the collapse of the connection between the wad and holder.

4. The shot holder and wad unit defined in claim **3** in which the longitudinally central portions of said outside walls are bowed transversely and inwardly to control the collapse of the walls.

5. The shot holder and wad unit of claim **1** of which said struts are formed at the axis of the unit to provide a pair of V-shaped strut members extending inwardly transversely of the unit and having their apexes adjacent to each other and to the axis of said unit, the two V-shaped members when unstressed presenting an overall substantially X-shaped configuration.

6. The shot holder and wad unit defined in claim **1** in which said struts are integrally interconnected across their longitudinal mid-points into a closed X-frame; a pair of longitudinally extending, outside walls adjacent the outer edges of said wad and holder and substantially interconnecting the outer edges of the X-frame; and transversely and inwardly bowed portions adjacent the longitudinal middle of said walls controlling the collapse thereof.

7. A shot shell comprising: an elongated cup-shaped casing; a powder charge at the bottom of said casing; a shot holder and wad unit as defined in claim **1** forwardly of said powder charge; shot pellets in said shot holder; and means integral with the front end of said casing for holding the shot pellets therein.

References Cited

UNITED STATES PATENTS

3,217,648	11/1965	Foote et al.	102—42
3,262,392	7/1966	Becker et al.	102—42
3,285,174	11/1966	Moehlman et al.	102—42
3,299,813	1/1967	Rickey	102—42

FOREIGN PATENTS

254,767	9/1927	Italy.

ROBERT F. STAHL, *Primary Examiner.*