Sept. 24, 1968 E. LEX 3,402,653

VENTILATION EXHAUST GRILLE

Filed June 2, 1966 2 Sheets-Sheet 1

Fig.1.

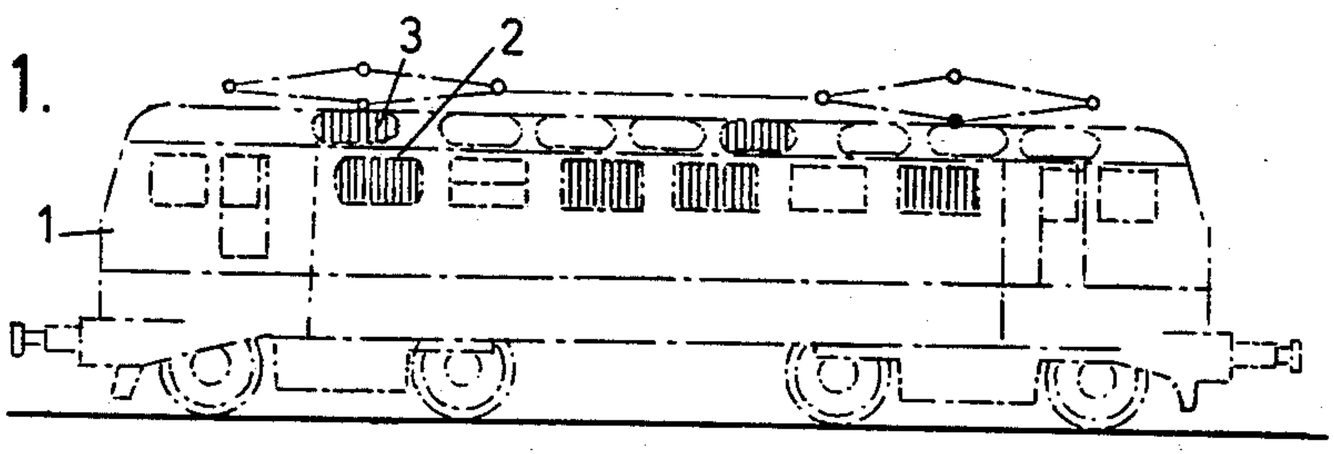

Fig.2.

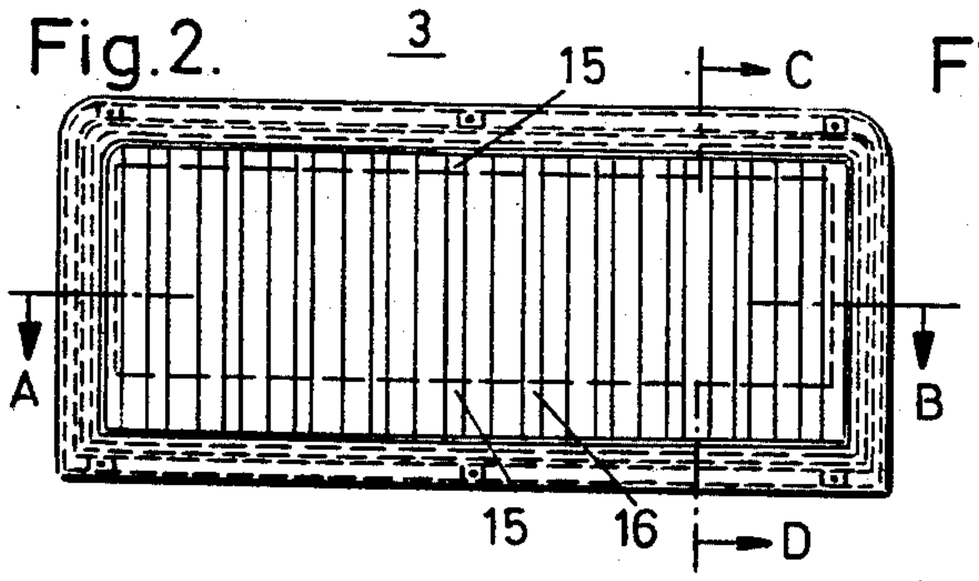

Fig.3.

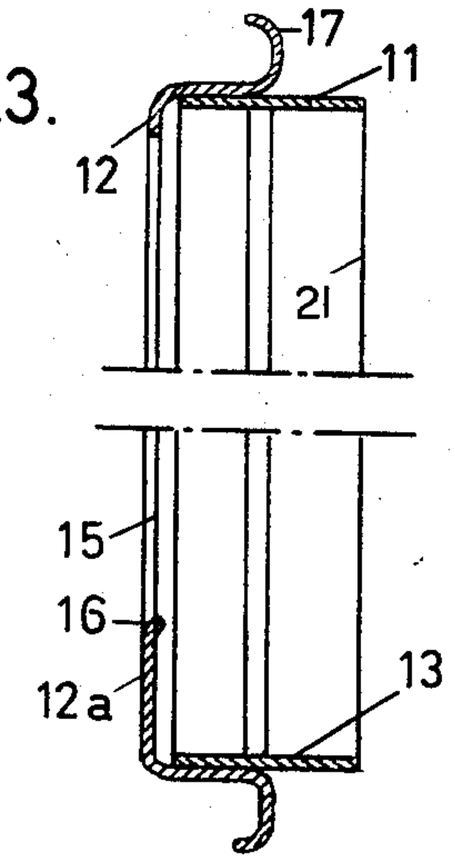

Fig.4.

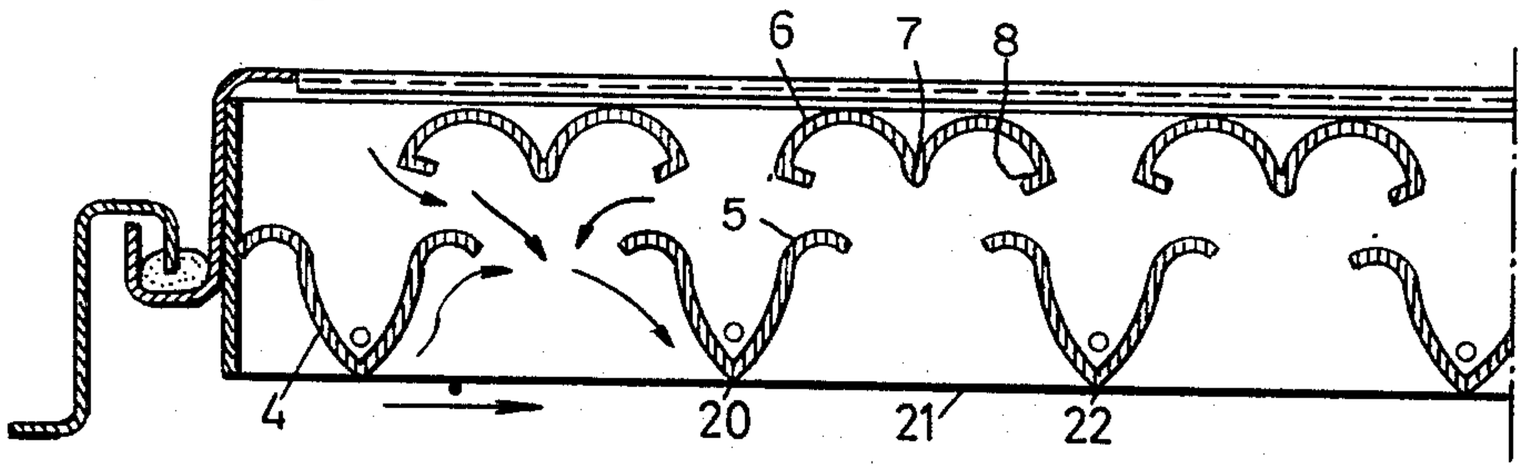

Fig.5.

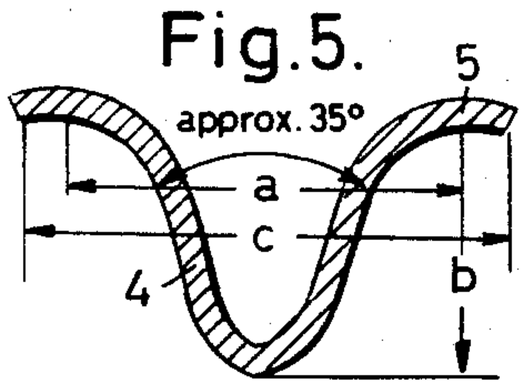

Fig.6.

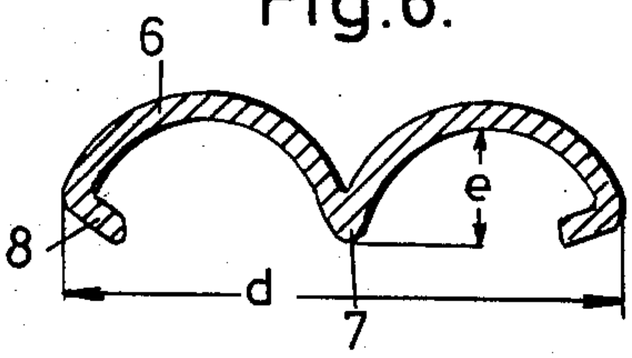

INVENTOR:
Eduard Lex
By
Sparrow and Sparrow
Attorneys

Sept. 24, 1968 E. LEX 3,402,653

VENTILATION EXHAUST GRILLE

Filed June 2, 1966 2 Sheets-Sheet 2

Fig.3a

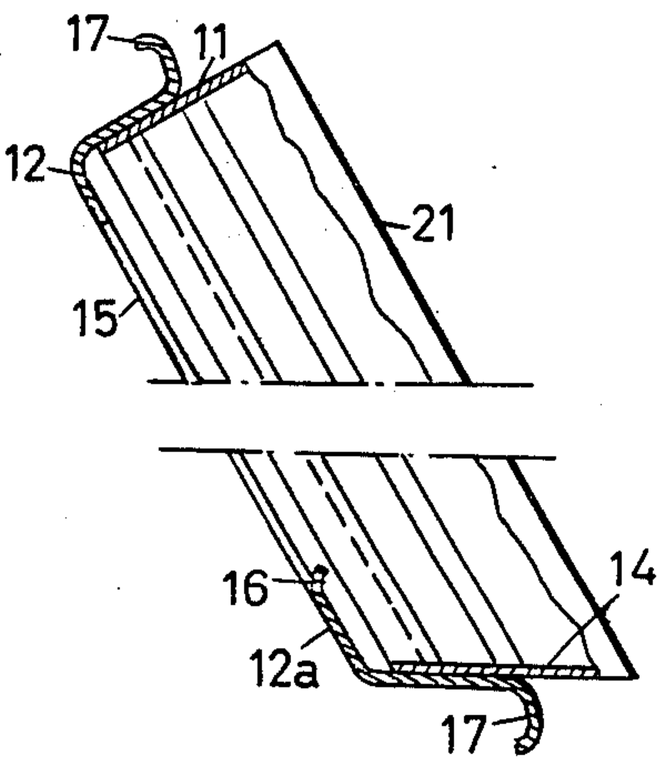

Fig.4a.

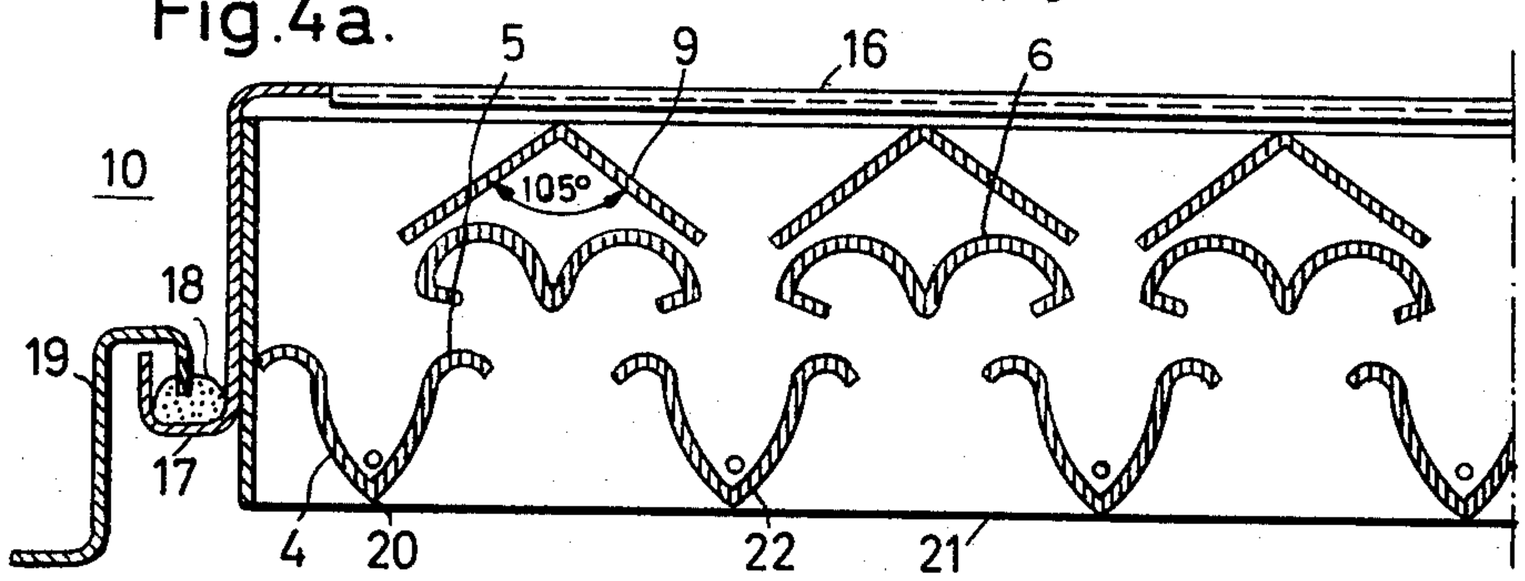

Fig.7.

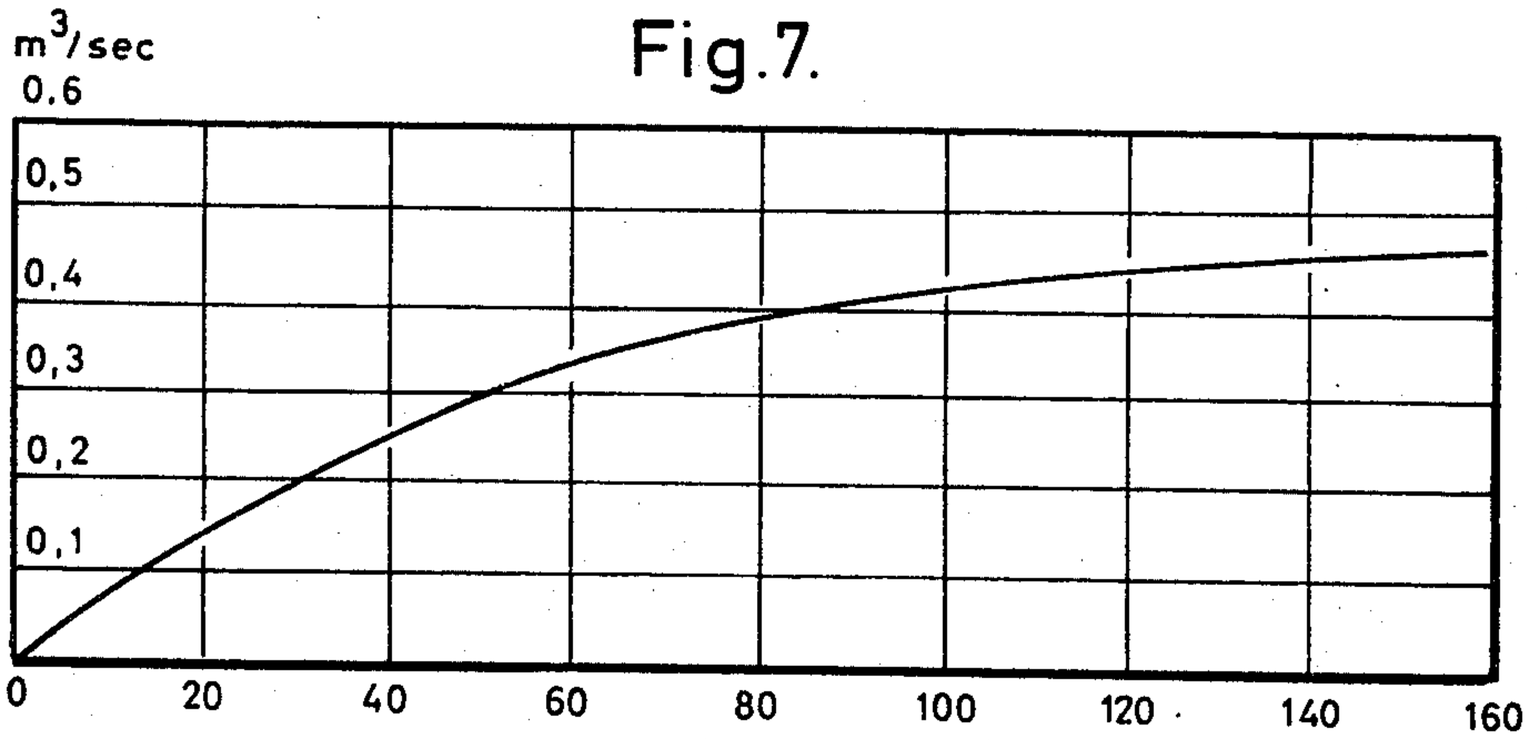

INVENTOR:

Eduard Lex

By Sparrow and Sparrow
Attorneys

United States Patent Office

3,402,653

Patented Sept. 24, 1968

3,402,653

VENTILATION EXHAUST GRILLE

Eduard Lex, Pressatherstrasse 157a, Weiden, Radevormvald, Rhineland, Germany

Filed June 2, 1966, Ser. No. 554,732
Claims priority, application Germany, July 9, 1965, L 51,091
9 Claims. (Cl. 98—20)

ABSTRACT OF THE DISCLOSURE

A ventilation grille for moving vehicles, particularly railroad locomotives, for the exhaust of air from the interior of the locomotives having stationary ribs arranged in rows in the grille causing by their special shape and arrangement an exhaust effect while preventing rain, snow or the like from entering through the grille into the locomotive.

This invention relates generally to ventilation grilles and more particularly to the types used in connection with vehicles.

Railroad vehicles, particularly electric and diesel-electric locomotives require very large quantities of air for cooling. Special air intake grilles have been developed for this purpose, including multiple nozzle ventilation grilles with vertically arranged angle bar ribs having an angle of approximately 60°. These grilles have the property of not only guiding air into the vehicle under the technically best conditions, but also cleaning the air of water, snow and dust. However, heat frequently builds up underneath the ceiling or in other spaces within the locomotive body, which causes overloads in electrical instruments and machines. This, in turn, leads to losses of working capacity of these devices, which can become quite troublesome during the operation. Therefore, locomotive manufacturers and railroad companies and other locomotive-using enterprises are quite interested in getting a useful and efficient exhaust ventilation grille which at the same time may have a similar outside appearance as the multiple nozzle ventilation grilles. It is indeed not desirable or even tolerable to put into a locomotive, which already has a distinct type of ventilation grille having vertically arranged angle bars, further exhaust ventilation devices which deviate in shape from the former ones.

This invention consists in such novel features, construction arrangements, combinations of parts and improvements as may be shown and described in connection with the device herein disclosed by way of example only and as illustrative of a preferred embodiment. Objects and advantages of the invention will be set forth in part hereafter and in part will be obvious herefrom or may be learned by practicing the invention, the same being realized and attained by means of the instrumentalities and combinations pointed out in the appended claims.

An object of the present invention, therefore, is to provide an air exhaust ventilation grille of the type described which is capable of removing excessively warm air reliably and without mechanical aid means from the interior of the vehicle.

Another object of the present invention is to provide an air exhaust grille which resembles closely or even is identical to the conventionally used multiple nozzle ventilation grilles in their external appearance.

It is a further object of the present invention to provide a ventilation grille which, besides exhausting built-up warm air inside the body of the vehicle and having the appearance of the air intake grilles (multiple nozzle ventilation grilles), will provide for positively preventing

rainwater, snow and the like from entering through the air exhaust grille.

To this end, according to the present invention, the grille having two rows of per se known substantially vertically-staggered ribs arranged in a frame comprises specially shaped ribs having in the first row a bell-shaped cross-section and having in the second row a double bow-shaped cross-section which is open to the outside, whereby both sections have reversely curved ends.

The curvature of the bell shape of the ribs of the first row insures that the air flow resulting from the movement of the vehicle is intercepted and is deflected into the interior of the vehicle body without a substantial cavitation of the flow. However, the flow is outwardly deflected again after it had flowed along half the length of a lee-side flank of a rib of the first row, following a half-circle path hitting the windward flank of the next following rib in the first row, whereby the aerodynamically favorably-built shape causes a further and accelerated deflection towards the outside. Thereby a sizable negative pressure is generated near the ends of the ribs of the first row, between them and in the space between them and the ribs of the second row. The ensuing suction effect in this space causes an ejector action extracting a sizable amount of air from the interior of the vehicle and blowing it outwardly. The reversely curved ends of the ribs of both rows serve to guide the air flow and to lead the flow backwards to the outside, and furthermore to catch rainwater and to drain it downward in the gutter formed by them. The rainwater which obviously is heavier than the air and has a greater adhesive power to the wall of the ribs, is urged along the flanks of the ribs toward the inside of the grille where it is collected, as described above. Water which enters still further into the grille will be caught by the double bow-shaped ribs of the second row and is equally drained downward by them. The reversely curved ends of the ribs of the second row prevent particularly strongly the water from spilling sideways and influence favorably the guiding of the air by their design and shape. They aid particularly in channeling the air emanating from the interior of the vehicle or of the locomotive without causing eddy currents occurring by the undertow arising from the deflection of the external air flow and in letting the air pass through the outer row of ribs together with this external air flow.

Various further and more specific purposes, features and advantages will clearly appear from the detailed description given below taken in connection with the accompanying drawings which form part of this specification and illustrate merely by way of example one embodiment of the device of the invention. In the following description and in the claims parts will be identified by specific names for convenience, but such names are intended to be as generic in their application to similar parts as the art will permit. Like reference characters denote like parts in the several figures of the drawings, in which:

FIG. 1 illustrates a side view of a locomotive fitted with ventilation grilles including those according to the invention;

FIG. 2 is a front view of a ventilation grille according to the invention;

FIG. 3 is a vertical section along the line C–D of FIG. 2 of a ventilation grille to be mounted vertically;

FIG. 3*a* is a vertical section through a ventilation grille similar to FIG. 3, to be mounted at an angle;

FIG. 4 is a horizontal section along the line A–B of FIG. 2 of a ventilation grille comprising two rows of ribs;

FIG. 4*a* is a horizontal section similar to FIG. 4 of a grille comprising three rows of ribs;

FIG. 5 is a cross-section of a rib of the first row of FIG. 4;

FIG. 6 is a cross-section of a rib of the second row of FIG. 4; and

FIG. 7 shows a graph of the exhaust ventilating capacity of the device.

Referring now in more detail to the drawings illustrating a preferred embodiment by which the invention may be realized, there is illustrated in FIG. 1 a locomotive **1** which is equipped with multiple nozzle ventilation grilles **2** in the vertical side walls, having vertically arranged angle bar ribs for the ventilation of the engine and with exhaust ventilation grilles **3** according to this invention in the curved roof. The ribs **4** of the first row (FIGS. 4 and 5) have a bell-shaped cross-section (FIG. 5) with ends **5** which have a reverse curvature so that the entire cross-section resembles a sine graph extending by a certain amount beyond 360°. Certain special dimensions of the cross-section have been found to be particularly advantageous, for example, the spacing *a* to be approximately 42 mm., the amplitude *b* to be approximately 28 mm., a total length of the wave *c* to be approximately 50 mm. and a space between the ribs to be approximately 30 mm. The ribs **6** of the second row have the cross-section as shown in FIG. 6. This cross-section substantially consists of two adjacent arches having approximate semicircular or slightly spiral shapes whereby the radii of curvature increase from 10 to 20–30 mm. towards the point **7** where the arches meet. The free ends **8** are inwardly curved parallel to the direction of the flow of the air and serve the purpose of guiding the air flow. The total width *d* of the cross-section is preferably approximately 60 mm., the depth *e* of the arch is approximately 15 mm. and the length of the curved end **8** is approximately 7 mm.

Two rows of ribs, as shown in FIG. 4, are generally sufficient for a grille in a vertical wall, but in case of grille located at an angle, further ribs **9** are required which have an angular shape (FIG. 4*a*). These additional ribs are arranged behind the second row and are in line with the same. The angle of the shape of ribs **9** is substantially between 90° and 110°, preferably 105°. All the rows of the ribs are placed in an outwardly open box or container **10**. A frame is formed by its top and side walls **11** which are arranged perpendicularly to the rear wall **12**, and by its bottom or floor **13**. The floor **13** in a vertical grille is perpendicular to rear wall **12**, but in a grille located at an angle, the floor **14** is arranged at a corresponding angle so that any water may run off to the right (FIG. 3*a*).

Rear wall **12** has a large intake aperture **15** surrounded by an assembly frame **12'** for side walls **11** and floor **13**. Assembly frame **12'** is deeper at the bottom part **12***a* than on the other three sides, and it is bent downwards and inwards at **16** towards the apex of ribs **9** to insure that water does not run through into the interior of the vehicle. The ribs are welded to the box by side walls **11** and floor **13**. The outside of assembly frame **12'** is bent back for forming of a U-shaped supporting border **17** which at the same time serves for holding a rubber gasket **18** which in turn is engaged by a similarly U-shaped supporting border **19** of the vehicle wall.

Thus, the mounting of the grille is both resilient and waterproof. The crests **20** of ribs **4** having the bell-shaped cross-section are arranged flush with the external edge **21** of box **10**, and inside crests **20** are drained holes **22** for water which might be collected behind the ribs. Outer assembly frame **12**, supporting borders **17** and **19** also serve as water traps and drain channels.

In FIG. 7 the exhausting ventilating capacity of the grille according to the invention is plotted in a graph in $m.^3/sec.$ per $m.^2$ of the face area for various vehicle speeds. The graph has been obtained from tests on a test stand. As can be seen from the graph, the air exhaust capacity increases with the speed of the vehicle, eventually reaching 0.46 $m.^3/sec.$ per 1 $m.^2$ face area at a vehicle speed of 160 km./h.

While the invention has been described and illustrated with respect to a certain preferred example which gives satisfactory results, it will be understood by those skilled in the art after understanding the principle of the invention, that various other changes and modifications may be made without departing from the spirit and scope of the invention, and it is intended therefore in the appended claims to cover all such changes and modifications.

I claim:

1. An exhaust ventilation grille for vehicles for moving air out from the interior of said vehicles, comprising a frame, an outer and an inner row of substantially vertical ribs, said ribs immovably arranged in staggered relation in said frame, said ribs of said outer row having a substantially bell-shaped cross-section, the crest of said cross-section pointing to the outside, the open ends of said cross-section being reversely curved and positioned at a distance behind the level of said crest, and said ribs of said inner row having a substantially double-bow-shaped cross-section open to the outside and having the ends of said double-bow-shaped cross-section bent toward the middle of said double-bow on the open side thereof, said bent ends running substantially parallel to the flow of said air.

2. An exhaust ventilation grille as set forth in claim **1**, and said cross-section of said ribs of said outer row having the shape of a sine wave graph of more than 360°, said cross-section having an amplitude of substantially 28 mm., a spacing of substantially 42 mm., a total length of substantially 50 mm. and intervals between said cross-sections of substantially 30 mm.

3. An exhaust ventilation grille as set forth in claim **2**, and said double-bow-shaped cross-section of said ribs of said inner row consisting of two adjacent, substantially semicircular or slightly spiral arches, the radii of said arches increasing toward the point where said arches join, said arches having free ends having a reverse curvature parallel to the direction of said moving air.

4. An exhaust ventilation grille as set forth in claim **3**, and said two arches having a total width of substantially 60 mm., and a depth of substantially 15 mm., and said free ends being substantially 7 mm. long.

5. An exhaust ventilation grille as set forth in claim **4**, and comprising an outwardly open box, said ribs being located therein, said box having an outer edge flush with the crests of said bell-shaped cross-sections of said ribs of said outer row.

6. An exhaust ventilation grille as set forth in claim **5**, and said bell-shaped ribs having drain holes inside said crests of said bells.

7. An exhaust ventilation grille for vehicles for moving air out from the interior of said vehicles, comprising a frame, an outwardly open box structure surrounding said frame, an outer and an inner row of substantially vertical ribs, and a third row of ribs, said ribs of said outer, inner and third rows immovably arranged in staggered relation in said frame, said ribs of said outer row having a substantially bell-shaped cross-section, the crest of said cross-section pointing to the outside, the open ends of said cross-section being reversely curved, said ribs of said inner row having a substantially double-bow-shaped cross-section open to the outside and having the ends of said bow-shaped cross-section reversely bent toward the middle of said double bow, said bent ends running substantially parallel to the flow of said air, said ribs of said third row having an angle cross-section, said third row located behind and parallel with said inner row of ribs, the angle of said angle cross-section being

substantially between 95° and 110°, and said box having an outer edge flush with said crests of said bell-shaped cross-sections of said ribs of said outer row.

8. An exhaust ventilation grille as set forth in claim 7, and said box having a top, a floor and two side walls, said top and said side walls being arranged at right angles, and said floor being arranged at an oblique angle for preventing water from collecting.

9. An exhaust ventilation grille as set forth in claim 8, and said box having a rear wall, said rear wall having a frame around said outwardly open aperture, the bottom portion of said frame being deeper than the other portions thereof, and said aperture having an edge, said edge being bent inwardly toward said ribs of said first and said second rows.

References Cited

UNITED STATES PATENTS

2,990,766	7/1961	Lex	98—1.3
2,295,669	9/1942	Laws	98—66
2,717,547	9/1955	Grenzebach et al.	98—66
3,267,834	8/1966	Hockett	98—121

FOREIGN PATENTS

750,567	5/1933	France.
835,435	9/1938	France.
68,806	10/1951	Netherlands.

ROBERT A. O'LEARY, *Primary Examiner.*

M. A. ANTONAKAS, *Assistant Examiner.*