Sept. 24, 1968 V. P. COLIZZA ET AL 3,402,647

TROWELLING BLADE ASSEMBLIES

Filed Oct. 22, 1965 2 Sheets-Sheet 1

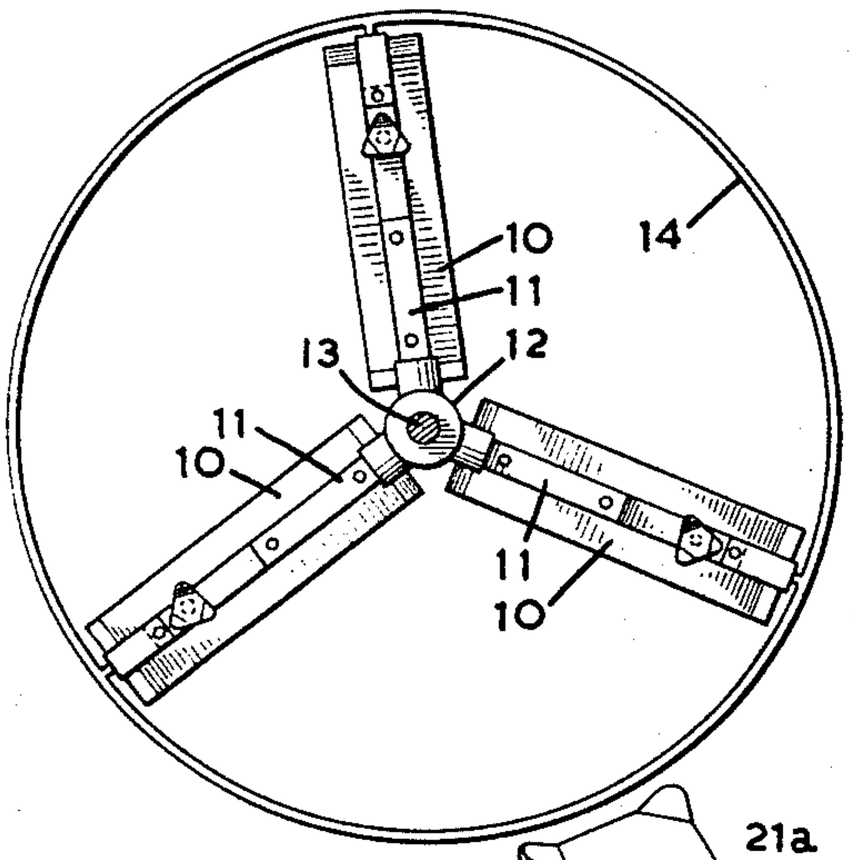

FIG. 1

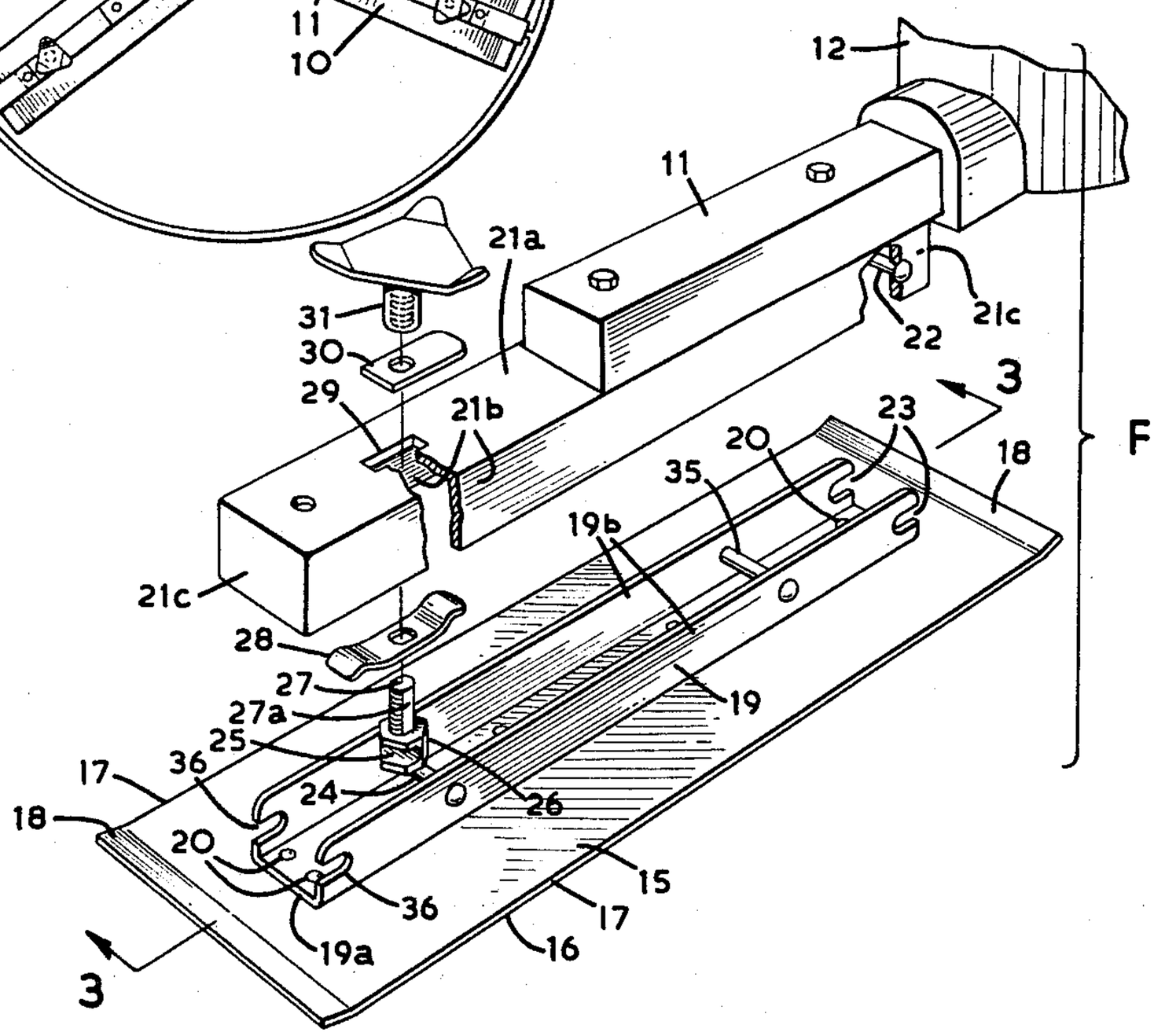

FIG. 2

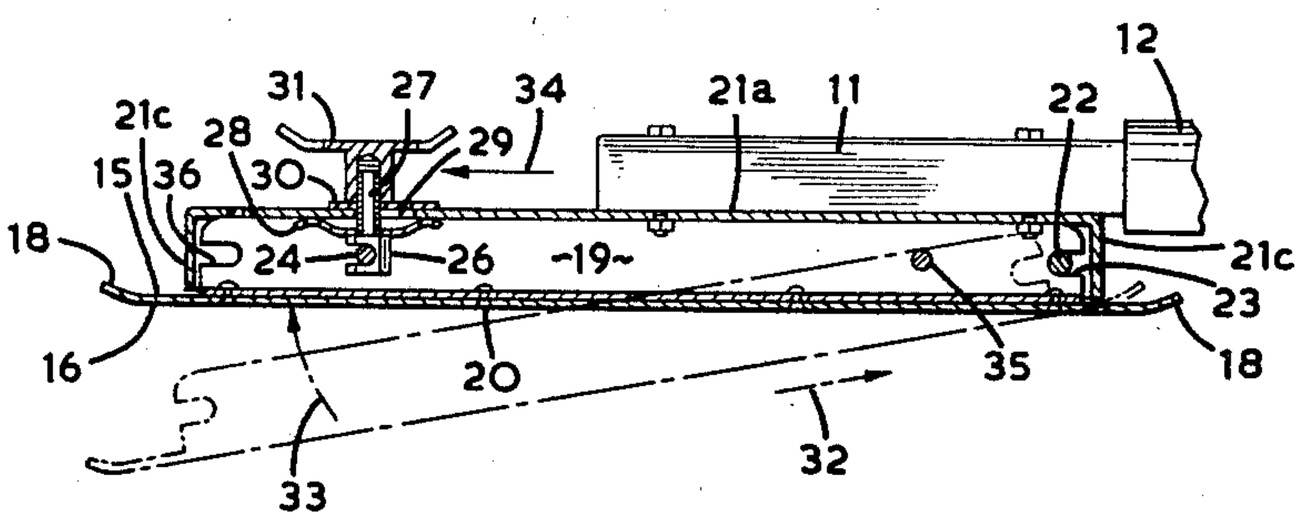

FIG. 3

INVENTOR.
VINCENT P. COLIZZA
FRANCESCO ZOCHIL

BY~ Church & Rogers

PATENT AGENTS

Sept. 24, 1968 V. P. COLIZZA ET AL 3,402,647

TROWELLING BLADE ASSEMBLIES

Filed Oct. 22, 1965 2 Sheets-Sheet 2

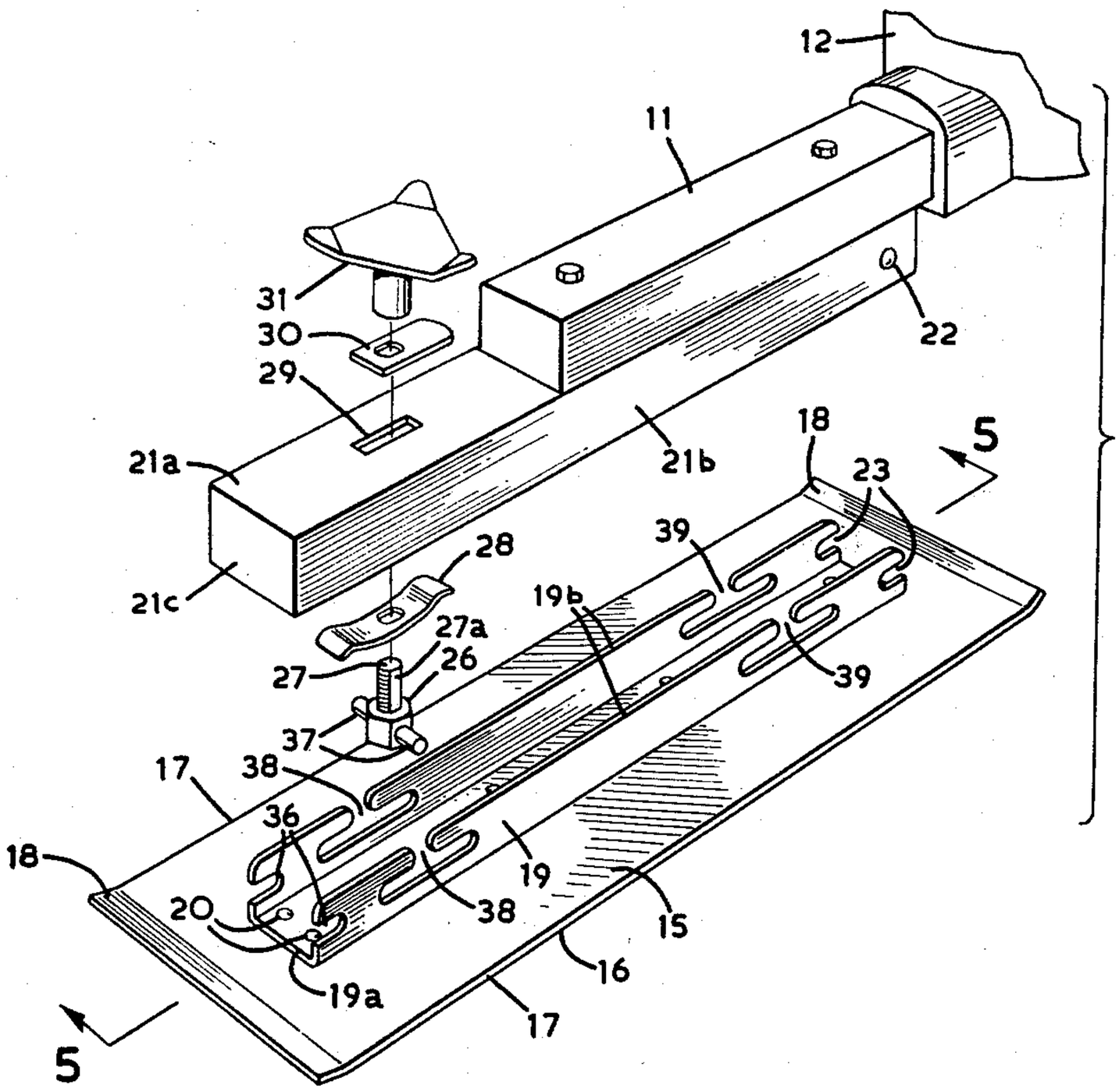

FIG. 4

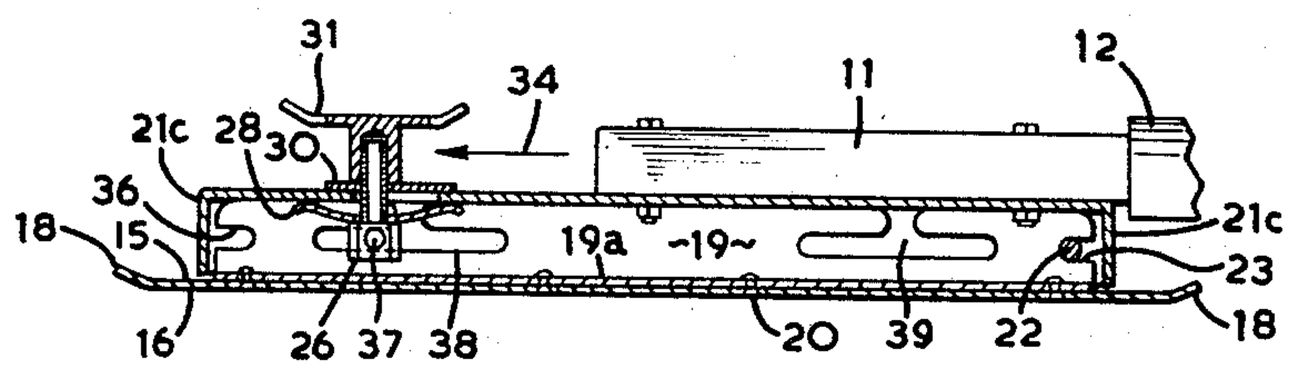

FIG. 5

INVENTOR.
VINCENT P. COLIZZA
FRANCESCO ZOCHIL
BY~
Church & Rogers
PATENT AGENTS

United States Patent Office

3,402,647

Patented Sept. 24, 1968

3,402,647

TROWELLING BLADE ASSEMBLIES

Vincent P. Colizza, Burlington, Ontario, and Francesco Zochil, Hamilton, Ontario, Canada, assignors to Hamilton Float & Trowel Limited, Hamilton, Ontario, Canada

Filed Oct. 22, 1965, Ser. No. 502,683
17 Claims. (Cl. 94—45)

ABSTRACT OF THE DISCLOSURE

A trowelling blade assembly for use with a motor-driven trowelling machine consists of the blade and two attachment members fixed respectively to the blade and an arm of the machine; attaching means fastening the attachment members together comprise two spaced sets of cooperating pin means and slot means; at least one attaching means of one set is movably mounted on the respective attaching member to engage it and disengage it from the other means of the same set; each set consists of one means on one member and two alternatively engageable cooperating means on the other member to permit end-for-end reversal of the blade.

This invention relates to improvements in trowelling blade assemblies for use with a trowelling machine, and more particularly to means which enable trowelling blades to be readily attached to and detached from power trowelling machines.

Power trowelling machines, also sometimes known as concrete finishing machines, are now widely and commonly used for the smoothing and polishing of cement surfaces, such as concrete floors. Such machines comprise, for example, a motor which rotates a boss about a generally vertically disposed axis, the boss having three, or sometimes four, arms spaced equiangularly around it and extending radially therefrom.

A trowelling blade is attached to each arm, and it has been common practice hitherto to simply bolt the blades directly to the arms, using at least three bolts.

In a typical trowelling operation a roughly-smoothed cement surface is trowelled, using so-called float blades on the machine, to a predetermined degree of smoothness and density, as judged by the operator. The float blades are then replaced by finish blades of smaller area than the float blades and the trowelling continued until the desired polished finish is obtained. The removal and replacement of the blades to change them is a time consuming operation, particularly with machines of the type that require removal of a guard ring that is usually provided to protect the rotating blades against contact with stationary objects. Moreover, the blades wear relatively quickly, and must frequently be reversed or replaced, entailing another removal and replacement operation.

Accordingly, it is an object of the present invention to provide a detachable attaching means which permits quick and easy removal, installation and reversal of a trowelling blade associated therewith.

In the operation of the machine it is subjected to considerable mechanical stress, and also becomes splattered with cement and similar rapidly hardening material. It has frequently been found with the machines known hitherto employing bolts as blade fastening means that some of this material deposits on the bolts and, in the course of a normal trowelling operation, becomes so hard that it makes removal of the bolts difficult, or even impossible without damaging the threads thereof.

Accordingly, it is another object of the invention to provide a detachable attaching means that is completely protected against the adverse effects of such deposited hardenable material.

In accordance with the present invention there is provided a trowelling blade assembly for use with a trowelling machine, the assembly comprising a trowelling blade having an upper surface and a working surface opposite to said upper surface, and means for detachably attaching the blade to the trowelling machine, said attaching means comprising a first attachment member secured to and upstanding from the upper surface of the blade, a cooperating second attachment member for attachment to the trowelling machine, a first set of two cooperating attaching means carried respectively by the said two attachment members and engaging one another to detachably attach the members together, and a second set of cooperating attaching means spaced from the first set, the second set comprising a fixed attaching means fixedly carried by the first attachment member and a movable attaching means movably carried by the second attachment member, the last-mentioned two attaching means engaging one another to detachably attach the attachment members together, the said movable attaching means comprising a movable member mounted by the second attachment member for longitudinal movement for engagement with and disengagement from the said fixed attaching means, and also mounted thereby for movement transverse to the said longitudinal movement for releasably locking the cooperating attaching means to one another, and moving and locking means operatively engaged with the movable member for producing the said longitudinal and transverse releasable locking movements thereof.

Particular preferred embodiments of the invention will now be described, by way of example, with reference to the accompanying drawings wherein:

FIGURE 1 is a view from above showing a plurality of trowelling blades mounted on blade holders, the holders being connected to a collar that is adapted to be driven by the driving shaft of the motor of a trowelling machine,

FIGURE 2 is an exploded perspective view showing a trowelling blade assembly that is a first embodiment of this invention,

FIGURE 3 is a sectional view, taken on the line **3—3** of FIGURE 2, and showing the manner in which the trowelling blade of FIGURE 2 is attached to its blade holder,

FIGURE 4 is a view similar to FIGURE 2 of a second embodiment, and

FIGURE 5 is a view similar to FIGURE 3, and taken on the line **5—5** of FIGURE 4.

Corresponding parts of all the figures of the drawing will be given the same reference number.

FIGURE 1 illustrates the general blade arrangement of a motor driven trowelling machine, wherein the three blades **10** are detachably connected to respective arms **11** of the machine, the arms being connected to a boss **12** that is mounted on the output shaft **13** of the machine, whereby the blades **10** can be rotated by the machine in a horizontal plane. The blades are mounted at equal angles of 120° (this angle would be 90° for a four blade machine) and may be float blades which are used for general smoothing of a cement surface, finishing blades which are used to impart a very smooth finish to an already smoothed surface, or combination blades which are used for both purposes. A guard ring **14** is provided on the machine to protect the blades against contact with surrounding objects, e.g., walls and pillars, while the machine is in use.

Referring now especially to FIGURES 2 and 3, it will be seen that each blade **10** is generally rectangular as seen in plan having an upper surface **15**, a working surface **16** disposed opposite to and therefore underneath the upper surface **15**, two straight parallel longer sides **17** and two straight parallel shorter ends **18**. The two end portions of the blade are inclined slightly upward to prevent

the corners of the blades digging into the surface being smoothed as the machine is in use.

Attaching means for detachably connecting together the blade and the associated machine arm **11** comprise a first member **19** which in this embodiment is of generally U-shaped channel form, having the base **19***a* of the channel fastened to the upper surface **16** of the blade by suitable fastening devices **20**, such as rivets, and the two spaced sides **19***b* of the channel extending generally perpendicular to the face **16**. The channel member extends as nearly as possible the full length of the blade **10** and is positioned centrally with respect to the sides **17** and ends **18** thereof, so that its longitudinal axis is generally parallel to the longer sides **17**. Such a member is very rigid in relation to its weight, as compared with the flat blade **10**, and this rigidity is imparted to the blade **10**, permitting the employment of thinner material for the blade than has been common hitherto. To this end also pairs of transversely spaced rivets **20** are employed, such a disposition making the blade assembly more rigid than if a single row of fastening devices are employed, as in the trowel devices used commercially hitherto.

The attaching means also comprise a second member **21** which is attached to the associated arm **11** by bolts **22**, and serves as a supporting connection between the arm and the neighboring part of the guard ring **14**. This member **21** is in this embodiment also of generally U-shaped channel form, having its base **21***a* fastened to the arm **11**, and the two spaced longer sides **21***b* extending generally parallel to the longer sides **19***b* of the member **19**. The ends of the channel are closed by respective shorter end walls **21***c*. The relative dimensions of the two members **19** and **21** are such that with the two member attached together the member **19** is completely enclosed in a chamber constituted by the member **21** and the adjacent part of the blade **10**, the side walls **21***b* and end walls **21***c* extending down as closely as possible to the adjacent part of the top surface **15** of the blade. The means for detachably attaching the two members together, which means will be described in greater detail below, are completely enclosed within this chamber and thereby protected from the deposit thereon of cement splatters and particles produced by operation of the machine.

The two members are detachably attached together in accordance with this invention by two longitudinally spaced pin and notch means. In this particular embodiment the first of these pin and notch means comprise a first pin **22** which is mounted in suitable apertures in the member **21**, extending perpendicular to the side walls **21***b*, and retained therein against endwise movement, for example by heading. This first pin means **22** cooperates with associated first notch means, constituted by two spaced notches **23** in the adjacent end of the member **19**, these notches extending longitudinally of the walls **19***b* and receiving the pin **22** for attaching engagement upon relative endwise movement of the two members.

The second pin attaching means comprise a second pin **24** mounted in suitable apertures in the member **19**, extending perpendicular to the side walls **19***b*, and retained therein in a similar manner to the pin **22**. The cooperating second slotted means is constituted by a single slot **25**, provided in the head **26** of a bolt **27**. The bolt shank has flat flanks **27***a*, so that it is of noncircular cross-section, the shank extending through a correspondingly shaped hole in a blade spring member **28**, an elongated slot **29** in the base **21***c* of the member **21**, a correspondingly shaped hole in a cover member **30**, and being threadedly engaged in a nut **31** that is adapted to be rotated by hand. The second slotted means constituted by the slot **25** are thus capable of endwise movement relative to its associated member **21** for the required attaching engagement with, and disengagement from, the cooperating second pin **24**.

The operation of attaching a trowel blade to the machine is illustrated generally by FIGURE 3 and is as follows:

The nut **31** is rotated to move the head **26** downwards under the downward bias of the bowed spring member **28**, rotation of the bolt being prevented by its engagement in the slot **29**. The blade is moved endwise from the position shown in broken lines in FIGURE 3, in the direction of the arrow **32**, until the slots **23** are attachably engaged with the pin **22**; the blade is then rotated in the direction of the arrow **33** until it is fully home with the member **19** enclosed within the member **21**; thereafter the assembly comprising the bolt **27**, the nut **31** and the associated members **28** and **30** are moved together in the direction of the arrow **34** until the slot **25** is in attaching engagement with the pin **24**; finally the nut **31** is rotated to tighten the engagement of the attaching means against the bias of the spring member **28**, until the two members **19** and **21** are securely fastened together. The blade is removed by reversing the above-described sequence of operations.

The dimensions of the cover member **30** are such that with the bolt **26** in its endmost position, as illustrated by FIGURE 3, the member **30** completely covers the slot **29**, and effectively prevents the entry of cement splatter, etc., to the interior of the compartment enclosing the fastening means.

In operation of the machine the leading edges of the blades are worn very much faster than the trailing edges, and the effective life of the blade can be increased if the fastening means permit the blade to be turned end-for-end. In the blades in accordance with this invention this is accomplished by providing on the trowel member **19** a a suitably located further pin **35**, constituting another second pin means for cooperation with the second slotted means, and two spaced slots **36** in the other end of the member, constituting another first slotted means for cooperation with the first pin means **22**.

Referring now to FIGURES 4 and 5, the second embodiment illustrated therein has the same first member **19** and second member **21**, and the same first pin means **22** and first slotted means **23** for detachably attaching the two members together. In this embodiment however a different arrangement of second pin and slotted means is provided, the second pin means being constituted by a single pin **37** mounted in the head **26** of the bolt **27** to extend transversely of the members **19** and **21**, parallel to the first pin **22**, and the second slotted means being constituted by two spaced, generally T-shaped slots **38**, the upright of the T of each slot opening at the free edge of the respective side wall, and the cross bar of the T extending oppositely towards the ends of the respective channel member **19**.

In mounting the trowel blade on the machine, after engagement of the pin **22** and the slots **23**, the assembly comprising the bolt **27** the pin **37** etc. are withdrawn until the pin can be inserted through the uprights of the two corresponding T shaped slots. Thereafter, with the two members **19** and **21** in close engagement, the assembly is moved in the direction of the arrow **34** to engage the pin **37** beneath the corresponding overhanging portions of the member **19**. As with the first embodiment, another second slot means **39** is provided, corresponding to the second slot means **38**, to permit the trowel blade to be turned end-for-end when required.

It will be apparent that for the purposes of the present invention the slots **38** and **39** could be of general L-shape with one leg opening to the free edges of the member **19** and the other leg extending towards the immediately adjacent end of the member. By the provision of T shape slots it is possible, if desired, to also use the trowel blade of the present invention in association with the fastening means specifically described and claimed in the copending application of Luigi Cagno, No. 405,552, filed October 21, 1964, and assigned to the same assignee.

It will be apparent to those skilled in the art that various changes and modifications may be made to the em-

bodiments described, and other embodiments are possible, within the scope of the appended claims.

What we claim is:

1. A trowelling blade assembly for use with a trowelling machine, the assembly comprising a trowelling blade having an upper surface and a working surface opposite to said upper surface, and means for detachably attaching the blade to the trowelling machine, said attaching means comprising a first attachment member (19) secured to and upstanding from the upper surface of the blade, a cooperating second attachment member (21) of channel cross-section with an elongated slot (29) in the base wall thereof and with both of the channel ends closed, the channel being open towards the blade with its side and end walls extending into the close neighbourhood of the upper surface of the blade to constitute therewith an enclosure enclosing the first attachment member, a first set of two cooperating attaching means (22, 23, 36) carried respectively by the said two attachment members and engaging one another within the said enclosure to detachably attach the members together, and a second set of cooperating attaching means (24, 25, 36 or 37, 38, 39) spaced from the first set, the second set comprising a fixed attaching means (24, 25 or 38, 39) fixedly carried by the first attachment member and a movable attaching means (25 or 37) movably carried by the second attachment member, the last-mentioned two attaching means engaging one another within the said enclosure to detachably attach the attachment members together, the said movable attaching means comprising a movable screw-threaded member (27) mounted in the said slot for longitudinal movement in the direction of elongation thereof for engagement with and disengagement from the said fixed attaching means, and also mounted in the slot for movement towards and away from the blade for releasably locking the cooperating attaching means to one another, a nut (31) screw-threadably engaged with the screw-threaded member and producing the said releasable locking movement thereof upon rotation of the nut, and cover means (30) movable with the screw-threaded member and closing the part of the slot not occupied by the last-mentioned member to prevent passage of material through the slot to the interior of the enclosure.

2. A trowelling blade assembly as claimed in claim 1, wherein the said movable attaching means comprise a slotted member (26) carried by the said screw-threaded member (27) and the cooperating fixed attaching means comprise a pin (24 or 35) carried by the first attachment member, the slotted member having the slot (25) thereof lockably engaged with and disengaged from the pin by the said longitudinal and locking movements of the screw-threaded member, the pin being mounted by the first attachment member to extend transversely of the directions of said longitudinal and locking movements of the screw-threaded member.

3. A trowelling blade assembly as claimed in claim 1, wherein the said movable attaching means comprise a slotted member (26) carried by the said screw-threaded member (27) and the cooperating fixed attaching means comprise a pin (24 or 35) carried by the first attachment member, the slotted member having the slot (25) thereof lockably engaged with and disengaged from the pin by the said longitudinal and locking movements of the screw-threaded member, wherein the said first attachment member (19) is of channel section having two spaced sidewalls (19*b*) upstanding from the upper surface of the blade, and wherein the said pin (24 or 35) is mounted by and extends between the said spaced upstanding sidewalls.

4. A trowelling blade assembly as claimed in claim 1, wherein the said movable attaching means comprise a pin member (26, 37) carried by the said screw-threaded member (27) and the cooperating fixed attaching means comprise generally L-shaped slot means (38, 39) carried by the first attachment member, the pin member having the pin (37) thereof lockably engaged with and disengaged from the slot means by the said longitudinal and locking movements of the screw-threaded member, the said slot means having a vertically extending entry portion and a horizontally extending portion connected to said entry portion, the pin being engaged in said horizontally extending portion for the said locking engagement with the slot means.

5. A trowelling blade assembly as claimed in claim 1, wherein the said movable attaching means comprise a pin member (26, 37) carried by the said screw-threaded member (27) and the cooperating fixer attaching means comprise generally L-shaped slot means (38, 39) carried by the first attachment member, the pin member having the pin thereof lockably engaged with and disengaged from the slot means by the said longitudinal and locking movements of the screw-threaded member, wherein the said first attachment member (19) is of channel section having two spaced sidewalls (19*b*) upstanding from the upper surface of the blade, and wherein the said slot means comprise respective parallel slots in the respective channel sidewalls, each slot having a vertically extending entry portion and a horizontally-extending portion connected to said entry portion, the pin being engaged in the horizontally extending portion for the said locking engagement with the slots.

6. A trowelling blade assembly as claimed in claim 1, wherein the two attaching means (22 and 23, 36) of the said first set are fixedly carried by their respective attachment members, and are attachably engaged with and detached from one another by movement relative to one another of the two attachment members.

7. A trowelling blade assembly as claimed in claim 1, wherein the attaching means of the first set comprise a pin member (22) fixedly carried by the second attachment member (21) and the first attachment member (19) is provided with end slots (23, 36) at the two opposite ends thereof, the said end slots being selectively engageable with the last-mentioned pin member (22) to permit reversal of the blade end-for-end, and wherein the attaching means of the second set comprise a pair of spaced pins (24, 35) fixedly carried by the first attachment member (19) and each constituting a respective fixed attachment means, and a movable slotted member (25, 26) carried by the said screw-threaded member (27) and selectively engageable with a corresponding one of the last-mentioned pin means (24, 35) when the blade is reversed end-for-end.

8. A trowelling blade assembly as claimed in claim 1, wherein the attaching means of the first set comprise a pin member (22) fixedly carried by the second attachment member (21) and the first attachment member (19) is provided with end slots (23, 36) at the two opposite ends thereof, the said end slots being selectively engageable with the last-mentioned pin member to permit reversal of the blade end-for-end, and wherein the attaching means of the second set comprise a pair of spaced slot means (38, 39) fixedly carried by the first attachment member (19) and each constituting a respective fixed attachment means, and a movable pin member (26, 37) carried by the said screw-threaded member (27) and selectively engageable with a corresponding one of the said slot means (38, 39) when the blade is reversed end-for-end.

9. A trowelling blade assembly for use with a trowelling machine, the assembly comprising a trowelling blade having an upper surface and a working surface opposite to said upper surface, and means for detachably attaching the blade to the trowelling machine, said attaching means comprising a first attachment member (19) secured to and upstanding from the upper surface of the blade, a cooperating second attachment member (21) for attachment to the trowelling machine, a first set of two cooperating attaching means (22, 23, 36) carried respectively by the said two attachment members and engaging one an-

other to detachably attach the members together, and a second set of cooperating attaching means (24, 25, 36 or 37, 38, 39) spaced from the first set, the second set comprising a fixed attaching means (24, 25 or 38, 39) fixedly carried by the first attachment member and a movable attaching means (25 or 37) movably carried by the second attachment member, the last-mentioned two attaching means engaging one another to detachably attach the attachment members together, the said movable attaching means comprising a movable member (27) mounted by the second attachment member for longitudinal movement for engagement with and disengagement from the said fixed attaching means, and also mounted thereby for movement towards and away from the blade for releasably locking the cooperating attaching means to one another, and moving and locking means (31) operatively engaged with the movable member for producing the said longitudinal and releasable locking movements thereof.

10. A trowelling blade assembly for use with a trowelling machine, the assembly comprising a trowelling blade having an upper surface and a working surface opposite to said upper surface, and means for detachably attaching the blade to the trowelling machine, said attaching means comprising a first attachment member (19) secured to and upstanding from the upper surface of the blade, a cooperating second attachment member (21) for attachment to the trowelling machine, a first set of two cooperating attaching means (22, 23, 36) carried respectively by the said two attachment members and engaging one another to detachably attach the members together, and a second set of cooperating attaching means (24, 25, 36 or 37, 38, 39) spaced from the first set, the second set comprising a fixed attaching means (24, 25 or 38, 39) fixedly carried by the first attachment member and a movable attaching means (25 or 37) movably carried by the second attachment member, the last-mentioned two attaching means engaging one another to detachably attach the attachment members together, the said movable attaching means comprising a movable screw-threaded member (27) mounted by the second attachment member for longitudinal movement for engagement with and disengagement from the said fixed attaching means, and also mounted thereby for vertical movement for releasably locking the cooperating attaching means to one another, and nut means (31) screw-threadably engaged with the screw-threaded member and producing the said releasable locking movement upon rotation thereof.

11. A trowelling blade assembly as claimed in claim 10, wherein the said movable attaching means comprise a slotted member (26) carried by the said screw-threaded member (27) and the cooperating fixed attaching means comprise a pin (24 or 35) carried by the first attachment member, the slotted member having the slot (25) thereof lockably engaged with and disengaged from the pin by the said longitudinal and locking movements of the screw-threaded member, the pin being mounted by the first attachment member to extend transversely of the directions of said longitudinal and locking movements of the screw-threaded member.

12. A trowelling blade assembly as claimed in claim 10, wherein the said movable attaching means comprise a slotted member (26) carried by the said screw-threaded member (27) and the cooperating fixed attaching means comprise a pin (24 or 35) carried by the first attachment member, the slotted member having the slot (25) thereof lockably engaged with and disengaged from the pin by the said longitudinal and locking movements of the screw-threaded member, wherein the said first attachment member (19) is of channel section having two spaced sidewalls (19*b*) upstanding from the upper surface of the blade, and wherein the said pin (24 or 35) is mounted by and extends between the said spaced upstanding sidewalls.

13. A trowelling blade assembly as claimed in claim 10 wherein the said movable attaching means comprises a pin member (26, 37) carried by the said screw-threaded member (27) and the cooperating fixed attaching means comprise generally L-shaped slot means (38, 39) carried by the first attachment member, the pin member having the pin (37) thereof lockably engaged with and disengaged from the slot means by the said longitudinal and locking movements of the screw-threaded member, the said slot means having a vertically/extending entry portion and a horizontally/extending portion connected to said entry portion, the pin being engaged in said horizontally extending portion for the said locking engagement with the slot means.

14. A trowelling blade assembly as claimed in claim 10, wherein the said movable attaching means comprise a pin member (26, 37) carried by the said screw-threaded member (27) and the cooperating fixed attaching means comprise generally L-shaped slot means (38, 39) carried by the first attachment member, the pin member having the pin thereof lockably engaged with and disengaged from the slot means by the said longitudinal and locking movements of the screw-threaded member, wherein the said first attachment member (19) is of channel section having two spaced sidewalls (19*b*) upstanding from the upper surface of the blade, and wherein the said slot means comprise respective parallel slots in the respective channel sidewalls, each slot having a vertically/extending entry portion and a horizontally/extending portion connected to said entry portion, the pin being engaged in the horizontally/extending portion for the said locking engagement with the slots.

15. A trowelling blade assembly as claimed in claim 10, wherein the two attaching means (22 and 23, 36) of the said first set are fixedly carried by their respective attachment members, and are attachably engaged with and detached from one another by movement relative to one another of the two attachment members.

16. A trowelling blade assembly as claimed in claim 10, wherein the attaching means of the first set comprise a pin member (22) fixedly carried by the second attachment member (21) and the first attachment member (19) is provided with end slots (23, 36) at the two opposite ends thereof, the said end slots being selectively engageable with the last-mentioned pin member (22) to permit reversal of the blade end-for-end, and wherein the attaching means of the second set comprise a pair of spaced pins (24, 35) fixedly carried by the first attachment member (19) and each constituting a respective fixed attachment means, and a movable slotted member (25, 26) carried by the said screw-threaded member (27) and selectively engageable with a corresponding one of the last-mentioned pin means (24, 35) when the blade is reversed end-for-end.

17. A trowelling blade assembly as claimed in claim 10, wherein the attaching means of the first set comprise a pin member (22) fixedly carried by the second attachment member (21) and the first attachment member (19) is provided with end slots (23, 36) at the two opposite ends thereof, the said end slots being selectively engageable with the last-menioned pin member to permit reversal of the blade end-for-end, and wherein the attaching means of the second set comprise a pair of spaced slot means (38, 39) fixedly carried by the first attachment member (19) and each constituting a respective fixed attachment means, and a movable pin member (26, 37) carried by the said screw-threaded member (27) and selectively engageable with a corresponding one of the said slot means (38, 39) when the blade is reversed end-for end.

References Cited

UNITED STATES PATENTS

3,296,946	1/1967	Cagno	94—45
3,066,332	12/1962	Sedlacek	14—27

JACOB L. NACKENOFF, *Primary Examiner.*