Sept. 24, 1968 C. C. FOX 3,402,617

CLOTHES DRYER DRIVE ARRANGEMENT

Filed Jan. 12, 1966

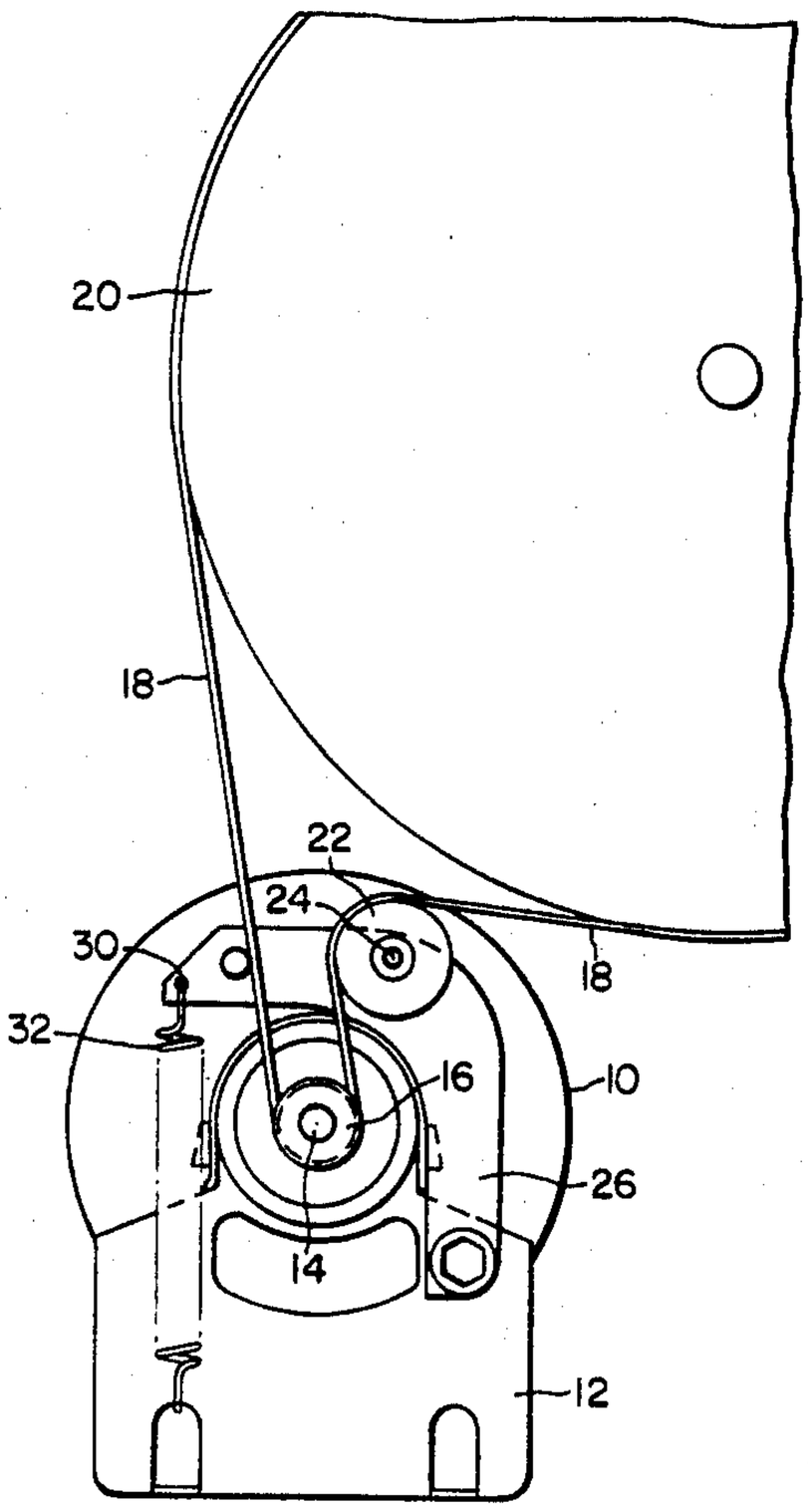

FIG.1.

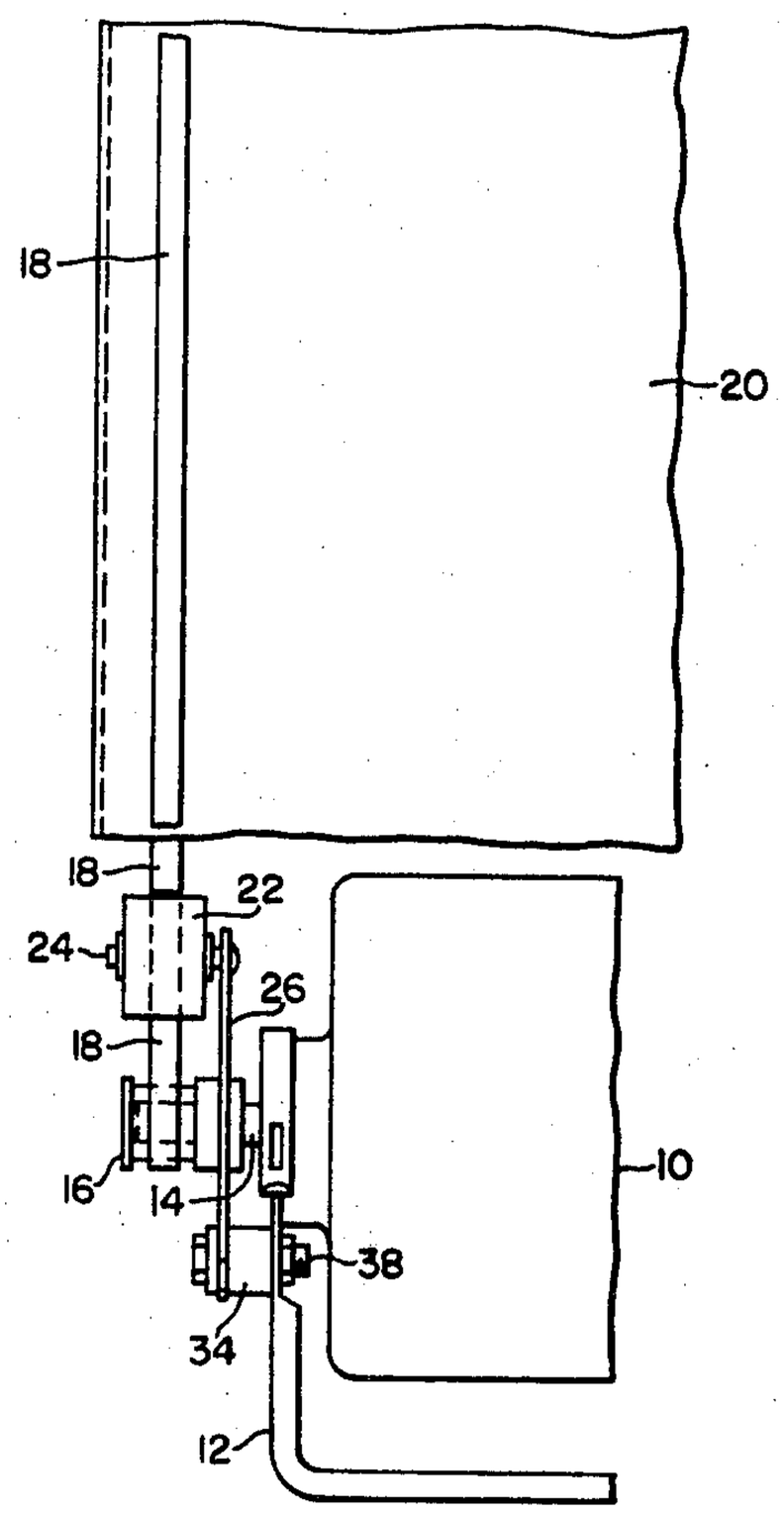

FIG.2.

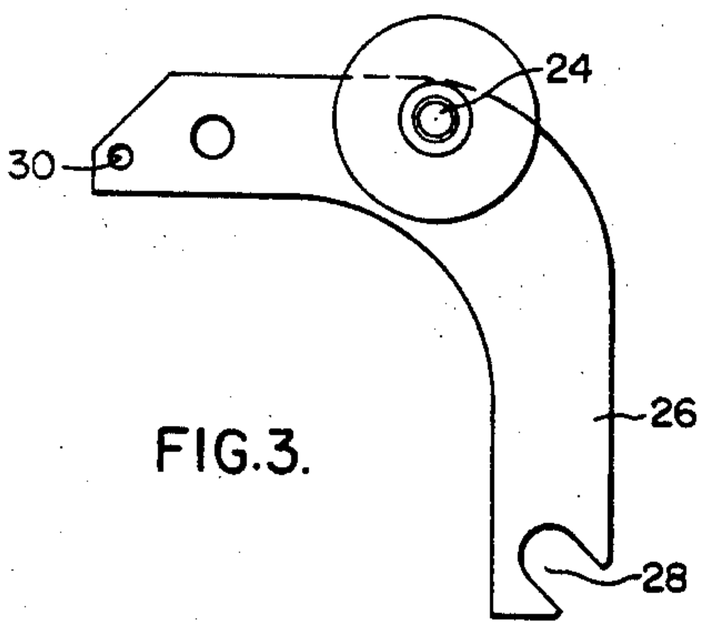

FIG.3.

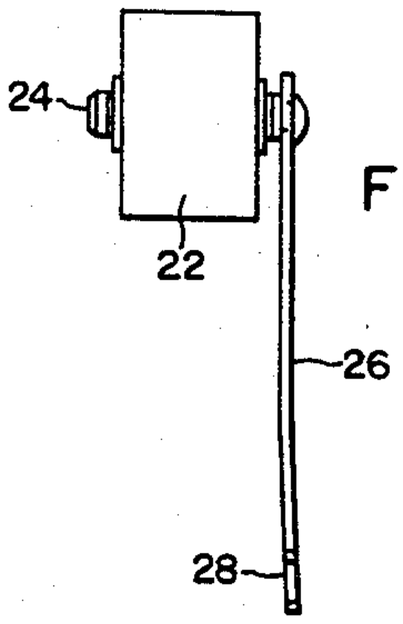

FIG.4.

FIG.5.

WITNESSES

Theodore F. Wrobel

James F. Young

INVENTOR

Clyde C. Fox

BY Edward C. Arey

ATTORNEY

United States Patent Office

3,402,617

Patented Sept. 24, 1968

3,402,617

CLOTHES DRYER DRIVE ARRANGEMENT

Clyde C. Fox, Mansfield, Ohio, assignor to Westinghouse Electric Corporation, Pittsburgh, Pa., a corporation of Pennsylvania

Filed Jan. 12, 1966, Ser. No. 520,107

3 Claims. (Cl. 74—227)

ABSTRACT OF THE DISCLOSURE

Belt-tensioning, idler pulley arrangement, for a tumbler type clothes dryer, the idler pulley being mounted on an angular outline, substantially planar arm having one end pivotally mounted to the motor base end at one side of the drive motor pulley, the other end of the arm being connected to the motor base end by a tension spring secured to the motor base end at the other side of the drive motor pulley.

This invention relates generally to clothes dryers and in particular to a drive arrangement for a clothes dryer of the rotating tumbler type.

One arrangement for rotatably driving the clothes tumbler basket uses a single continuous flat belt which extends around a portion of the tumbler circumference and is driven from an electric motor pulley. Manufacturing tolerances in the belt length, and in the distance between the centers of the drive motor and the tumbler dictate, as a practical matter, an idler or some other mechanism to insure that the belt is under tension. One tensioning arrangement which superficially meets the service requirements comprises a formed leaf spring carrying a pulley bracket on one end and fixed to the machine frame on the other end. It is mounted in the machine so that the pulley carried by the bracket engages the belt to place it under tension. While this arrangement had the apparent advantage of extreme simplicity, it was found to be deficient in a number of respects. One difficulty is that the spring is subject to being warped during forming to an extent that the axis of the pulley as installed is not parallel to the axes of the drive pulley and the tumbler. Excessive edge wear of the belt accordingly results in failure of the belt, or requires the use of a belt wider than the power requirements. Additionally, the spring arrangement flexes and vibrates so that objectionable noise is generated and the life of the idler pulley is reduced.

One object of this invention is the provision of a drive arrangement for a dryer of the character noted which obviates a number of the problems experienced with the prior art drive arrangement, and affords additional advantages.

In accordance with the invention, the drive arrangement includes an idler pulley mounted on a relatively flat, angular-in-outline rigid arm which is pivotally supported at one end from the electric motor base, and with the other end of the arm urged in a direction placing the idler pulley in engagement with the belt to tension the belt. The pivotal support for the one end of the arm comprises a post projecting out from the motor base parallel to the axes of the drive and idler pulleys, with the post including a circumferential groove which receives an open-end slot provided in the end of the arm. The spring means for urging the idler pulley into engagement with the belt may take the form of a helical spring in tension having one end connected to the motor base, and the other end connected to the idler arm end opposite the pivotal support end of the idler arm.

The invention will be described in connection with the accompanying drawing illustrating a currently preferred embodiment, and wherein:

FIGURE 1 is a fragmentary end view of the clothes tumbler and driving motor with an idler arrangement according to the invention;

FIG. 2 is a fragmentary and partly-broken side view of the structure of FIG. 1;

FIG. 3 is a face view of the idler arm with the idler pulley mounted thereon;

FIG. 4 is an edge view of the idler arm and pulley of FIG. 3; and

FIG. 5 is a side view of the spacer or post upon which the idler arm is pivotally supported.

Referring to the drawing, a conventional A.C. electric motor **10**, which both drives the tumbler in its rotating movement and supplies the power for creating a draft of air through the tumbler, is supported by a conventional, upwardly-open, U-shaped cradle **12**. The motor shaft **14** carries a small drive pulley **16** adapted to receive the endless flat belt **18**, which extends around the drive pulley **16**, around the periphery of the tumbler **20** and around the idler pulley **22**. The tumbler is supported at front and rear by means not shown for rotation about its horizontal axis.

Referring to FIGS. 3 and 4 particularly, the assembly of the idler pulley **22**, its axle **24** and the arm **26** form a unitary construction which facilitates manufacture of the dryer and also facilitates maintenance in the field. The arm **26** is a rigid member which is angular-in-outline as shown. It is substantially planar except for the slight break as shown in FIG. 4 to accommodate the slight tilt of the motor cradle upright supporting the post **34**. The arm includes an open-end slot **28** at end for mounting, and a hole **30** at the other end to receive the end of a spring **32** (FIG. 1).

The arm **26** is pivotally supported about its slotted end upon a post **34** (FIGS. 2 and 5) provided with a circumferential groove **36** adjacent its outer end, and adapted to be mounted to the motor cradle **12** in outwardly projecting fashion by means of a mounting bolt **38** which passes through the central bore **40** of the post.

The arm and idler pulley assembly is mounted to the cradle by simply seating the slotted end **28** of the arm in the circumferential groove **36** of the post, and attaching the helical spring **32**. As shown in FIG. 1, lower end of the spring is hooked in the motor cradle, and the upper end is hooked in the hole **30** in the end of the arm. The sping **32** in tension urges the idler pulley **22** in an arc generally toward the motor pulley and against the belt **18** to place it in sufficient tension to drive the tumbler **20** in its rotating movement.

The unitary nature of the arm and idler pulley facilitates both factory assembly of the machine and removal of the parts for field maintenance. The idler arrangement also is well adapted for field modification since all that is required is the installation of the post **34** to the motor base and the installation of the idler arm and pulley assembly and the spring **32**. The entire idler assembly including the arm, pulley and spring form a relatively compact structure which is attached only to the motor base and is accommodated wholly within the area encompassed by the end of the motor and the motor base.

The idler arrangement as described herein according to the invention is of lower cost as compared to the prior art leaf spring idler arrangement, permits the use of an economical size belt, and because of its simplified assembly reduces labor cost. From the standpoint of operation, the difficulties experienced with edge wear of the belts due to lack of parallelism between the idler pulley

and other belt engaging members is significantly reduced.

Having described my invention I claim:

1. A drive arrangement for a belt-driven, horizontally-disposed, clothes dryer tumbler, comprising:

an electric motor having a drive pulley;

a base for said electric motor;

a single continuous belt connecting said pulley to drive said tumbler;

an idler pulley;

a substantially planar, angular-outline rigid arm disposed generally parallel to the plane of said belt and carrying said idler pulley adjacent the corner portion of said arm length;

means for pivotally mounting one end of said arm to the end of said base on one side of said drive pulley;

means connecting the other end of said arm to said base end on the other side of said drive pulley, said connecting means urging said arm in a direction in which said idler pulley engages said belt to place said belt under tension;

said means for pivotally mounting said arm includes a post projecting out from said motor base end parallel to the axes of said drive and idler pulleys, said post including a circumferential groove, and

said arm includes an open-end slot received in said groove to pivotally mount said arm.

2. A drive arrangement according to claim 1 wherein: said connecting means comprises a helical spring under tension.

3. A drive arrangement according to claim 2 wherein: said belt is relatively flat and extends around a portion of the periphery of said tumbler.

References Cited

UNITED STATES PATENTS

871,943	11/1907	Mattman	74—242.11
1,660,520	2/1928	Nielsen et al.	74—242.11
1,727,933	9/1929	Mitchell	74—242.11 X
1,848,423	3/1932	Jackson	74—242.11
2,158,556	5/1939	Wesche	74—242.11 X
2,329,159	9/1943	Gwaltney	74—242.11 X
3,124,235	3/1964	Hollyday	74—242.11 X
3,262,330	7/1966	Cheatum	74—242.11 X
3,309,783	3/1967	Worst	34—133 X
3,330,049	7/1967	Helton	74—242.11 XR
3,333,347	8/1967	Mueller et al.	

FRED C. MATTERN, JR., *Primary Examiner.*

J. A. WONG, *Assistant Examiner.*