April 9, 1968 D. G. MONDIADIS 3,376,868

SURGICAL EVACUATOR DEVICE

Filed June 4, 1964

FIG. 1

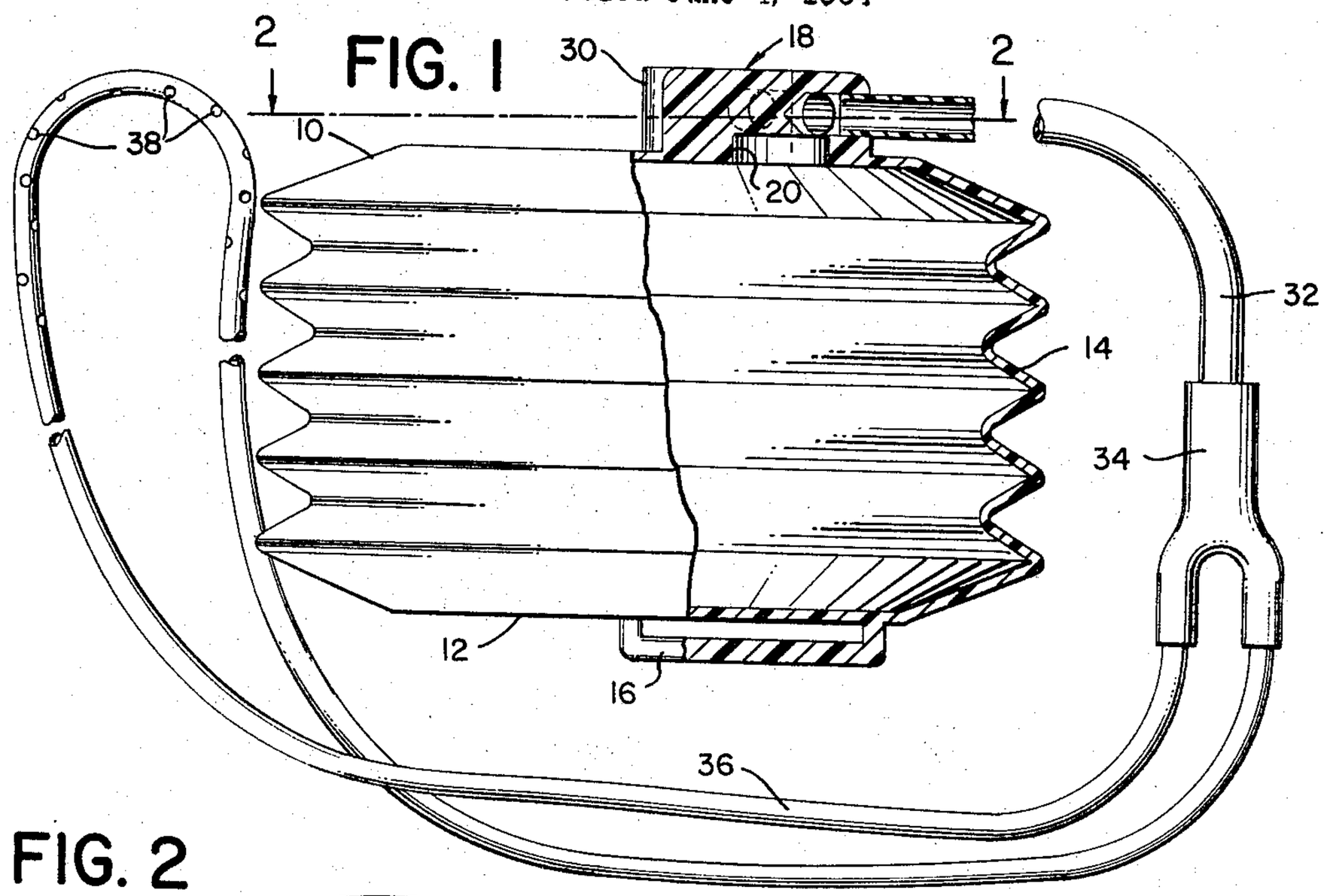

FIG. 2

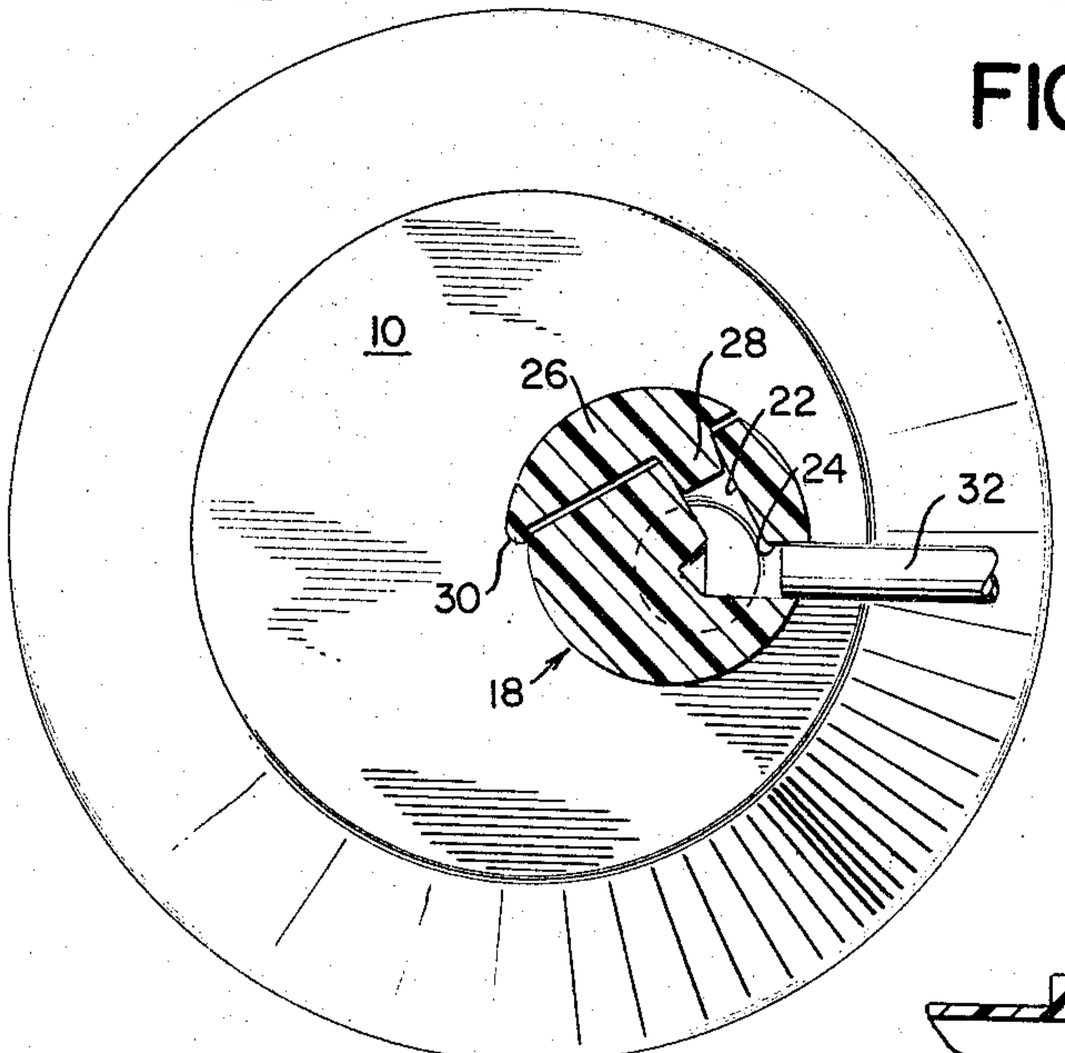

FIG. 3

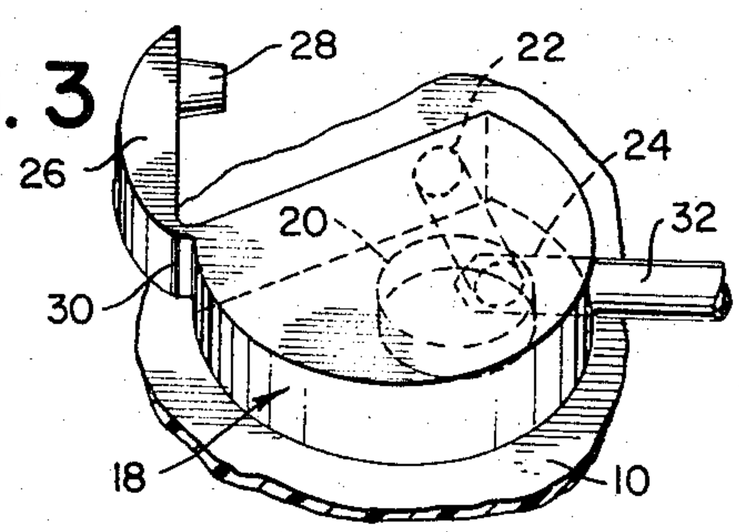

FIG. 4

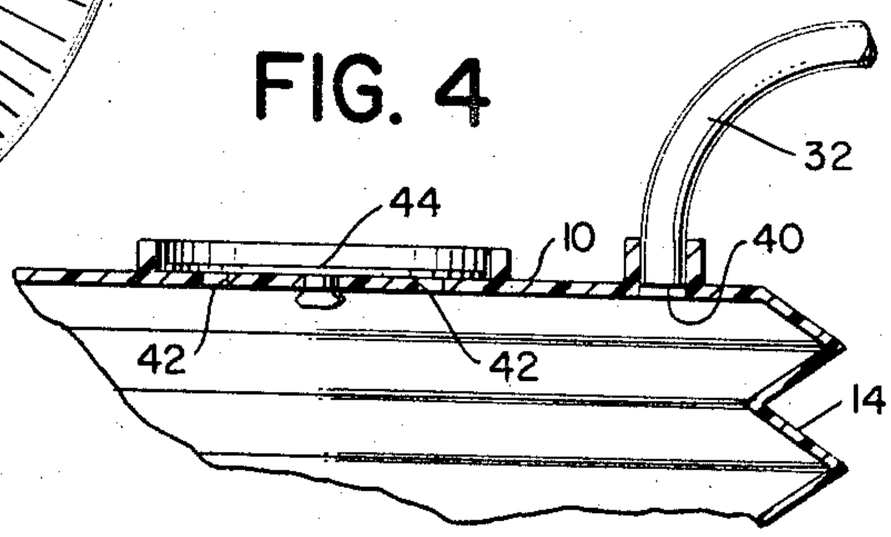

FIG. 5

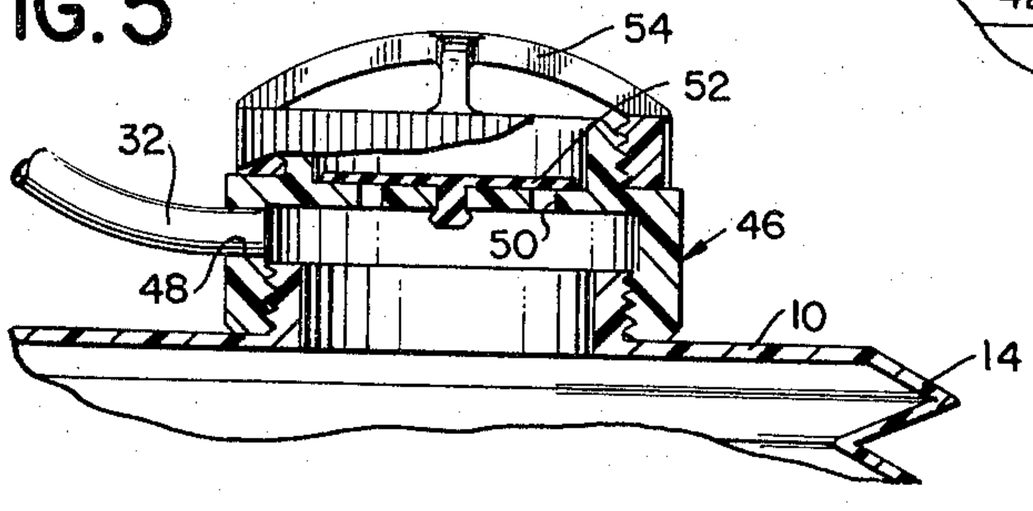

INVENTOR.
DIMITRI G. MONDIADIS

BY Pennie Edmonds Morton Taylor & Adams

ATTORNEYS

United States Patent Office

3,376,868
Patented Apr. 9, 1968

3,376,868
SURGICAL EVACUATOR DEVICE

Dimitri G. Mondiadis, New York, N.Y., assignor to Howe Sound Company

Filed June 4, 1964, Ser. No. 372,479
6 Claims. (Cl. 128—278)

This invention relates to surgical evacuator devices for draining fluids from a wound and, more particularly to a device which functions both as a pump and as a container for the fluids withdrawn.

Post-operative drainage of closed surgical wounds has been accomplished by inserting plastic tubes within the wound itself and extending them outwardly from the patient's body at a point somewhat removed from the incision. The number of these tubes is determined by the nature and size of the wound. Liquid may be introduced into the wound through one such tube and removed by suction along with body fluids through one or more of the other tubes which serve as evacuators. The evacuator tubes are generally left in place for a period of time after the liquid supply tube has been clamped off or removed to eliminate voids produced by the liquid and to dry the wound. This closed internal circulation of a surgical wound decreases the healing time and contributes substantially to the comfort of the patient.

In accordance with the present invention an improved surgical evacuator device is provided to induce suction in the evacuator tube or tubes used in draining the wound and to provide a container in which the withdrawn fluid may be collected for hygienic disposal. One primary object of the invention is to provide an evacuator device which is as economical in cost as it is reliable in maintaining the necessary suction during the protracted period of this treatment. An important feature of the new device particularly contributing to this end is a one-piece pump-container body which creates the necessary suction. This is in contrast to prior art devices which conventionally incorporate separate actuating means such as coil springs. Such springs may be disposed within the evacuator container itself, thus adding to the bulk of the structure and reducing available interior space, or may be disposed externally making the device cumbersome and inconvenient to use and operate. Prior art devices also conventionally use intricate valves to control the flow of air and/or liquids into the container. Such valve means add to weight and cost and complicate the structure.

Broadly stated, the new evacuator device for removing and collecting fluids from a closed wound comprises a compressible pump-container of resilient elastomeric material having top and bottom portions connected by a corrugated sidewall. This pump-container is expandable solely by the resiliency of its corrugated sidewall after it is compressed. An evacuator tube opening in communication with the interior of the pump container is adapted to receive an evacuator tube therein. A vent opening communicates with the atmosphere. A sealing means is attached to the top and is adapted to seal the vent opening.

It is particularly advantageous to form the pump-container of an elastomeric material of considerable elastic memory which is translucent so that visual observation may be made of the amount and other characteristics of the fluid collected within it. A vent sealing means is

contemplated in several embodiments which permit negative pressure to be established within the pump container without back-flow into the wound. When full the evacuator device may be replaced by an empty one and the closed circulation treatment continued. The full pump-container which is removed may be disposed of hygienically without being opened and therefore its economical construction is of considerable significance.

A preferred embodiment of the invention is described hereinbelow with reference to the accompanying drawing, wherein

FIG. 1 is an elevation partly broken away of the assembled surgical evacuator device;

FIG. 2 is a section taken along the line 2—2 of FIG. 1;

FIG. 3 is an enlarged fragmentary perspective of the valve unit of the assembly;

FIG. 4 is a detailed section of another embodiment of the invention illustrating a diaphragm sealing means; and

FIG. 5 is a detail section of another embodiment illustrating a diaphragm sealing means in the valve turret.

The evacuator device of the invention includes a substantially closed pump-container comprising top and bottom portions **10** and **12** connected by a continuous substantially cylindrical corrugated wall **14**. The corrugations of the wall **14** are defined by alternate annular ridges and grooves in parallel planes in the manner of a bellows. It is preferred that the pump-container be formed integrally of a resilient elastomeric material having a high elastic recovery characteristic. Polypropylene is particularly advantageous for this purpose and it is also translucent to permit observation of the interior of the pump-container. Indicating marks may be formed on the sidewall **14** of the pump-container to permit measurement of the volume of its liquid contents and an integral loop **16** may be included as shown to permit the device to be supported in use.

It is a feature of this pump-container that it may be axially compressed by downward displacement of the top portion **10** toward the bottom portion **12**, and thereafter the inherent resilience of the sidewall **14** will tend to expand the corrugations and return the pump-container to its normal configuration.

Referring to FIGS. 1–3 there is shown as an integral part of the elastomeric pump-container a valve unit which includes a turret **18** projecting from the top portion **10** of the pump-container. The interior of turret **18** is hollow and communicates with the interior of the pump-container by means of an opening **20**. Also, a vent opening **22** and an evacuator tube opening **24** extend through the wall of the turret **18** in communication with its interior. Integrally molded to the turret **18** is a removable plug **26** of the same material as the pump-container and the turret and having a stopper portion **28** adapted to seat in the vent opening **22** in fluid-tight sealed relationship therewith. A hinge portion **30** attaches the plug **26** to the turret **18** and permits it to be moved quickly and easily into and out of the sealed position.

Removably fitted in the opening **24** is the end of a flexible evacuator tube **32** which may be of a suitable synthetic elastomeric material. The end of the tube **32** remote from the turret **14** is preferably equipped with a forked connector **34** in which are mounted respective opposed ends of a looped tube **36** formed with a multiplicity of perforations **38**. The looped tube **36** is of conventional

construction and is designed to be inserted within the surgical wound that is to be drained.

Referring to FIG. 4, there is shown detail section of another embodiment of the device. There the evacuator **32** seats in an opening **40** in communication with the interior of the pump-container. The vent comprises a plurality of openings **42** communicating with the atmosphere. The vent openings **42** are sealed by a resilient diaphragm **44** attached to the top **10**. The diaphragm **44** is adapted to cover the openings **42** such that when gas is expressed from the interior of the pump-container the diaphragm will lift up permitting escape of gas. When the gas pressure within the container is less than atmospheric the diaphragm **44** will seat over the openings **42** and seal them.

Referring to FIG. 5, a detail section of another embodiment of the turret is shown. There a hollow turret **46** has an evacuator tube opening **48** adapted to receive the evacuator tube **32** therein. A plurality of vent openings **50** are provided in the upper portion of the turret **46**. The vent openings **50** are sealed against the atomsphere when the gas pressure within the pump container is reduced by means of a resilient diaphragm **52**. A guard **54** protects the diaphragm **52** from being accidentally unseated when in use.

In FIGS. 1 and 2, the stopper portion **28** of the plug **26** is in its position closing the vent **22** leading into the interior of the turret **18**, while in FIG. 3 the plug **28** has been removed to leave the vent opening **22** in free communication with the atmosphere. When the tube **32** is properly inserted in the wound and the wound has been closed, the plug **26** is placed in its open position shown in FIG. 3 and the pump-container is axially compressed by hand to bring the top portion **10** down quite close to the bottom portion **12**. Air within the pump-container is thus expelled through the vent opening **22**, and when the maximum collapse of the pump-container is reached the plug **26** is moved on its hinge **30** so that its stopper portion **28** closes off the vent opening **22** as shown in FIGS. 1 and 2.

Upon release of the manual compression collapsing the pump-container, the resilience of its corrugated sidewall **14** creates a tendency in it to expand and increase the enclosed volume therewithin. This in turn creates a suction transmitted through the tubes **32** and **36**, and from the latter by the openings **38** to whatever fluid may have collected in the wound. Consequently, this fluid is drawn through the tubes **36** and **32** into the pump-container. Because the wound is closed, air does not leak into the pump-container to disturb its operation and it continues to expand slowly as it is filled with drained fluid. While this takes place the assembly may be attached on or adjacent to the patient by means of the loop **16**.

If for any reason suction is broken and the pump-container expands without drawing fluid into its interior, the suction can be reestablished simply by removing the plug **26** to open the vent **22** so that the pump-container may be compressed and re-sealed. When it is expanded and substantially full, the pump-container may be detached from the tube **32** and disposed of as desired. A new unit may then be attached and the operation repeated until further drainage of the patient's wound is unnecessary.

In the embodiments of FIGS. 4 and 5 there is no need for separate manual operation of the vent control. When the pump-container is manually compressed the interior gases are easily expelled through the vent openings **50** (FIG. 5). The suction created by reason of the expansive action of the corrugated side walls **14** causes the diaphragm **52** to instantly seat upon the openings **50** when the compressive forces upon the pump-container are released.

I claim:

1. An evacuator device for removing and collecting fluids from a closed wound, said evacuator device comprising:

(a) a compressible pump-container of resilient elastomeric material having top and bottom portions connected by a corrugated sidewall having a wall thickness with elastic memory sufficient to expand said pump-container solely by the resiliency of its corrugated sidewall after it is compressed;

(b) a valve turret on said top portion defining the sole communication to the pump-container interior and having an evacuator tube opening therein adapted to receive an evacuator tube and a vent opening communicating with the atmosphere; and

(c) a resilient diaphragm connected to said top and adapted to seal said vent opening.

2. An evacuator device for removing and collecting fluids from a closed wound, said evacuator device comprising:

(a) a compressible pump-container of resilient translucent polypropylene having top and bottom portions connected by a corrugated sidewall having a wall thickness with elastic memory sufficient to expand said pump-container solely by the resiliency of its corrugated sidewall after it is compressed;

(b) a valve turret on said top portion defining the sole communication to the pump-container interior and having an evacuator tube opening therein adapted to receive an evacuator tube and a vent opening communicating with the atmosphere; and

(c) sealing means connected to said top and adapted to seal said vent opening.

3. An evacuator device for removing and collecting fluids from a closed wound, said evacuator device comprising:

(a) an axially compressible pump-container of integral resilient elastomeric material having top and bottom portions connected by a corrugated sidewall having a wall thickness with elastic memory sufficient to expand said pump-container solely by the resiliency of its corrugated sidewall after it is compressed;

(b) an integral hollow valve turret of the same material as said pump-container on the exterior side of said top portion, said turret defining the sole communication to the pump-container interior through an evacuator tube opening and a vent opening communicating with the atmosphere;

(c) an evacuator tube removably inserted in said evacuator tube opening and adapted to communicate with said fluids in said wound; and

(d) a displaceable plug of the same material as said pump-container hinged integrally to the exterior of said turret and adapted to be removably inserted in and to seal said vent opening.

4. An evacuator device for removing and collecting fluids from a closed wound, said evacuator device comprising:

(a) an axially compressible pump-container of integral resilient elastomeric material having top and bottom portions connected by a corrugated sidewall, said pump-container being expandable solely by the resiliency of its corrugated sidewall after it is compressed;

(b) an integral hollow valve turret of the same material as the pump-container on the exterior side of said top portion, said turret defining the sole communication to the pump-container interior through an evacuator tube opening and a vent comprising a plurality of openings communicating with the atmosphere;

(c) an evacuator tube removably inserted in said evacuator tube opening and adapted to communicate with said fluids in said wound; and

(d) a resilient diaphragm disposed upon said vent openings and adapted to prevent air from entering said pump container when the interior gas pressure is less than atmospheric pressure.

5. An evacuator device according to claim 4 wherein said elastomeric material is of polypropylene and said pump-container is substantially translucent.

6. An evacuator device in accordance with claim 5 wherein in addition said turret is provided with a guard to protect said diaphragm against accidental opening.

References Cited

UNITED STATES PATENTS

3,190,619	6/1965	Penney et al.	128—272
3,115,138	12/1963	McElvenny et al.	128—278
3,084,691	4/1963	Stoner	128—278
3,062,152	11/1962	Huff	103—148
3,058,627	10/1962	Eskridge	128—278
3,172,577	3/1965	Hartung	128—278

OTHER REFERENCES

"Bel-O-Pak," brochure of Quest, Inc., received in Patent Office September 1963.

RICHARD A. GAUDET, *Primary Examiner.*

CHARLES F. ROSENBAUM, *Examiner.*

Dedication

3,376,868.—*Dimitri G. Mondiadis*, New York, N.Y. SURGICAL EVACUATOR DEVICE. Patent dated Apr. 9, 1968. Dedication filed Sept. 10, 1970, by the assignee, *Howmedica, Inc.*

Hereby dedicates the entire term of the patent to the Public.

[*Official Gazette February 9, 1971.*]