April 2, 1968 L. J. HAMMAN 3,375,813

SIDE-MOUNTED INTERNAL COMBUSTION ENGINE STARTER

Filed Jan. 10, 1966 2 Sheets-Sheet 1

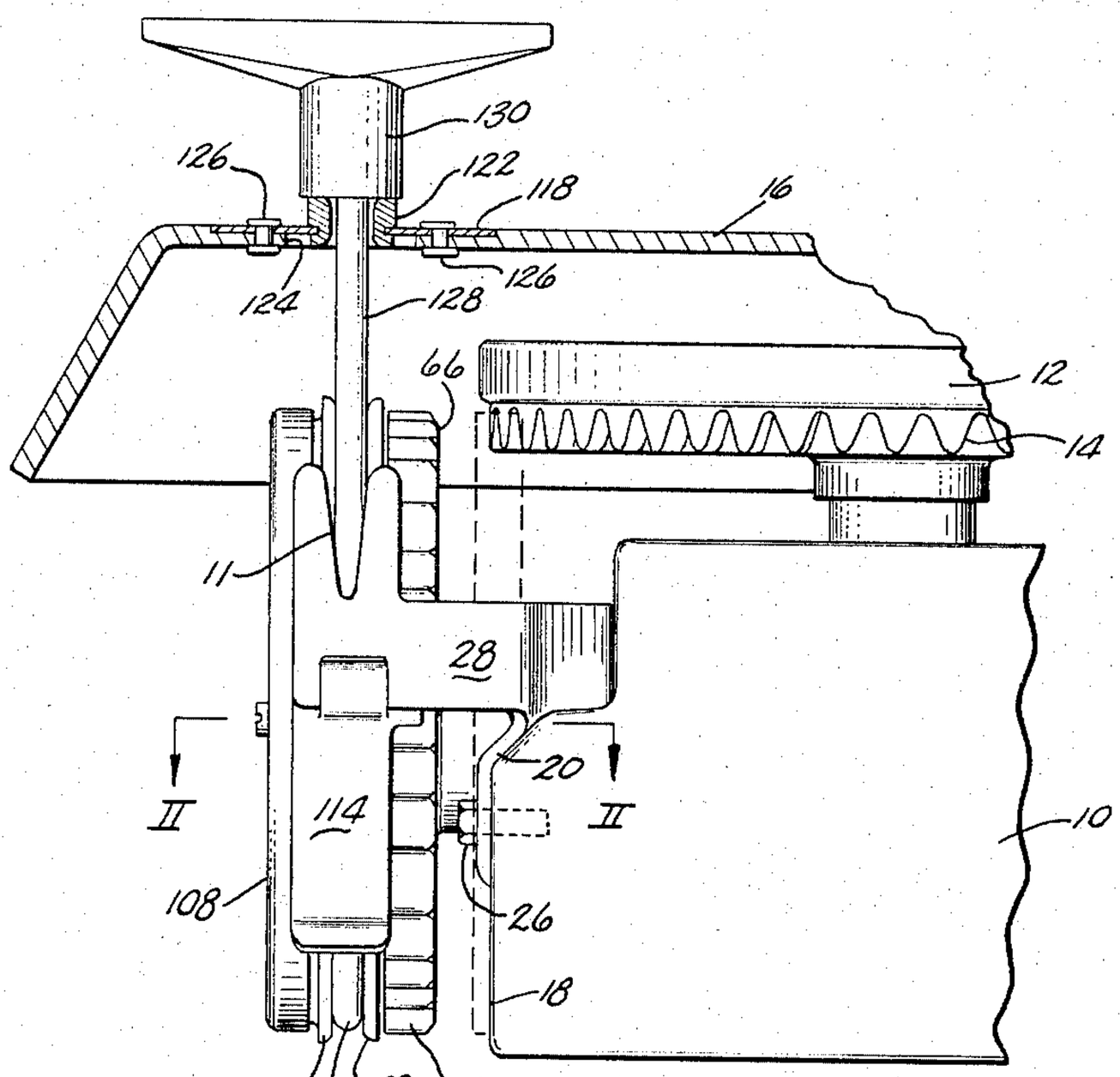

FIG. 1

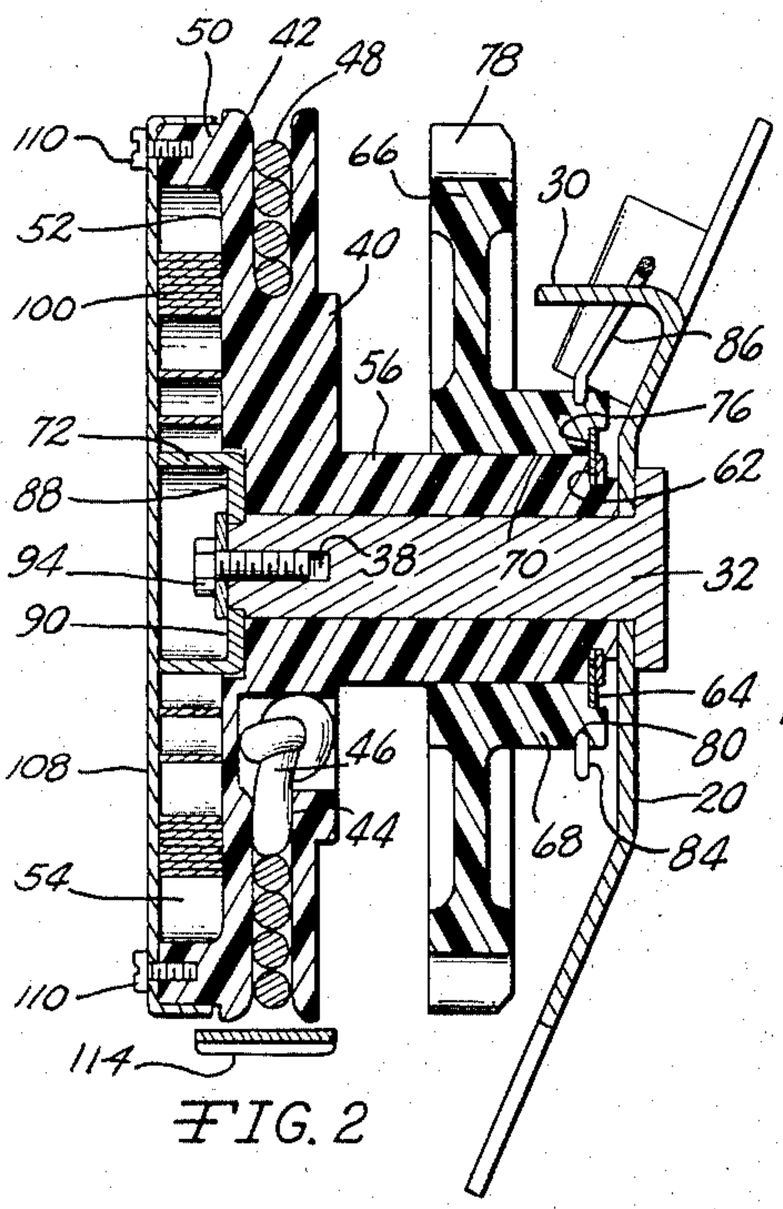

FIG. 2

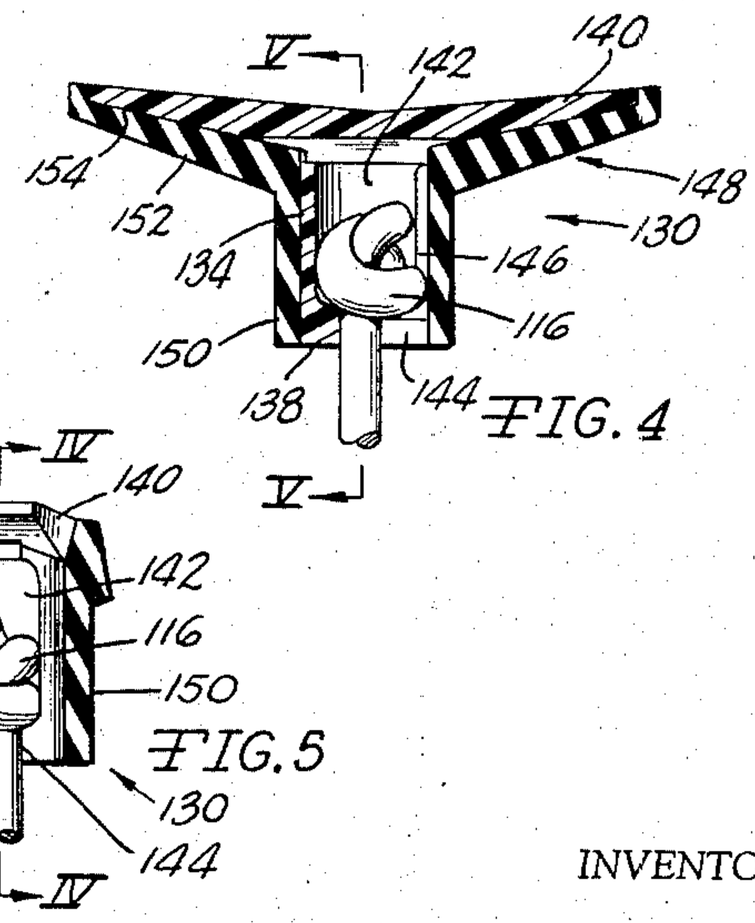

FIG. 4

FIG. 5

INVENTOR

LYLE J. HAMMAN

BY Beaman & Beaman

ATTORNEYS

April 2, 1968 L. J. HAMMAN 3,375,813

SIDE-MOUNTED INTERNAL COMBUSTION ENGINE STARTER

Filed Jan. 10, 1966 2 Sheets-Sheet 2

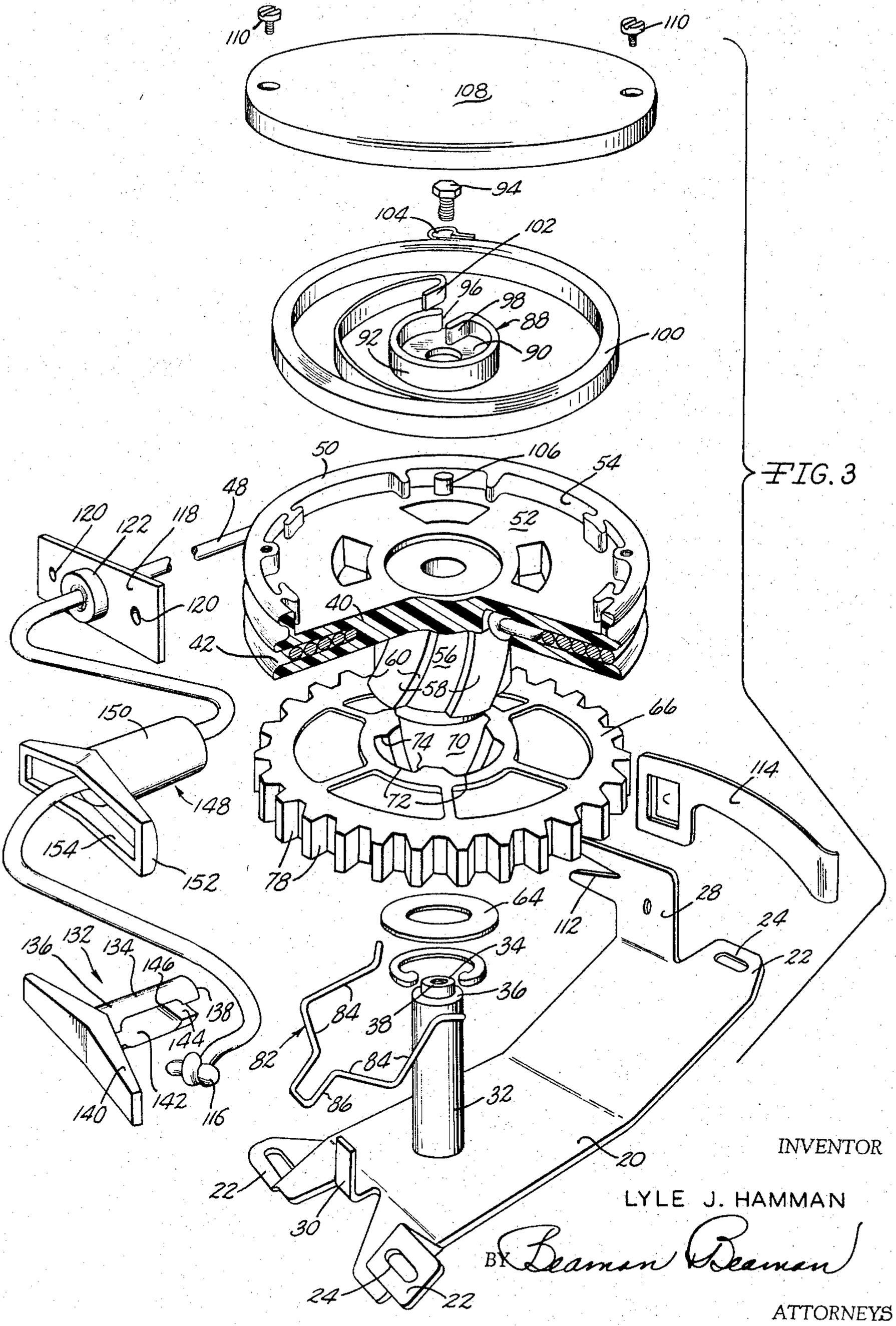

FIG. 3

INVENTOR

LYLE J. HAMMAN

BY Beaman Beaman

ATTORNEYS

United States Patent Office

3,375,813

Patented Apr. 2, 1968

3,375,813

SIDE-MOUNTED INTERNAL COMBUSTION ENGINE STARTER

Lyle J. Hamman, Eaton Rapids, Mich., assignor to Eaton Stamping Company, Eaton Rapids, Mich., a corporation of Michigan

Filed Jan. 10, 1966, Ser. No. 519,694

9 Claims. (Cl. 123—185)

ABSTRACT OF THE DISCLOSURE

A manual recoil starter for starting internal combustion engines particularly adapted for mounting upon the side of an engine wherein the starter is characterized by ease of assembly to the engine, accessibility for maintenance purposes and concise configuration. Additionally, novel handle means are employed with the starter rope associated therewith.

Rope starters for small internal combustion engines such as the type used on lawn mowers, pumps, generators, garden equipment and the like often employ recoil starters wherein a spiral spring is used to recoil the starter rope upon a rope-receiving pulley. Normally, such recoil starters engage clutching means mounted upon the engine flywheel adjacent the flywheel axis, and the axis of the starter rope pulley is concentrically related to the flywheel axis. Thus, each rotation of the rope pulley produces a complete rotation of the engine flywheel. While this arrangement permits a recoil starter to crank the engine through several rotations during the starting operation, the starter is directly subjected to the forces resisting cranking, namely, the engine friction and compression during the compression stroke of the piston. Also, as the conventional rope recoil rope starter is mounted concentric to the engine flywheel axis, the starter dimension increases the overall length of the engine components in the axial direction of the crankshaft axis.

The invention is directed to a "side-mounted" recoil rope starter for internal combustion engines, wherein the starter is mounted upon the side of the engine and the rope pulley axis is transversely disposed to the engine crankshaft and flywheel axis. With this type of starter, gear teeth are defined upon the flywheel at a distance which is several inches from the flywheel axis and, thereby, provide a mechanical advantage arising from the existing torque arm produced. The starter includes a cranking wheel having gear teeth defined thereon which selectively engage with the flywheel gear teeth. Initial rotation of the rope pulley by pulling on the starter rope engages the teeth of the cranking wheel with the flywheel teeth and further rotation of the rope pulley rotates the flywheel to crank and start the engine. While this type of side-mounted starter will not rotate the flywheel through as great a number of rotations for a given extension of the rope starter as the more conventional recoil starters described above, considerably less force is required to rotate the engine flywheel, due to the distance separating the flywheel gear teeth and its axis, which functions as a lever arm. Thus, this type of side-mounted starter permits an engine to be cranked while exerting considerably less tension on the starter rope than with the more conventional rope starters mounted coaxially with the flywheel axis. With this type of starter, women and children are able to start internal combustion engines which they were not previously able to crank. Thus, a basic object of the invention is to provide a recoil starter for internal combustion engines wherein the forces required to crank the engine are reduced from those required with more conventional recoil starters.

Another object of the invention is to provide a recoil

rope starter for an internal combustion engine whereby the starter may be mounted upon the side of the engine out of coaxial alignment with the engine crankshaft and the starter does not add to the overall length of the engine in the axial direction of the crankshaft.

A further object of the invention is to provide a recoil rope starter for internal combustion engines wherein the mounting means for the starter can be readily modified and a given starter construction may be easily adapted for use with a wide variety of engine constructions.

An additional object of the invention is to provide a recoil rope starter for internal combustion engines wherein the starter includes an engine cranking wheel adapted to be selectively moved toward and away from the engine flywheel, and wherein the rope pulley and engine cranking wheel are formed of synthetic plastic materials.

Yet another object of the invention is to provide a recoil rope starter for internal combustion engines wherein the recoil spring for rewinding the starter rope pulley is protected from dirt and foreign matter.

A further object of the invention is to provide a recoil rope starter for internal combustion engines wherein the starter includes a spiral recoil spring having an inner end adapted to be anchored to the starter support and having an outer end anchored to the rope pulley, the inner spring end anchor being adapted to automatically release the spring inner end should the spring inner end attempt to rotate in a spring-unwinding direction.

Another object of the invention is to provide a recoil rope starter for internal combustion engines utilizing a spiral recoiling spring wherein the spring may be "prewound" and rope retaining means are mounted upon the starter support bracket for maintaining the starter in the prewound condition prior to assembly upon an engine.

An additional object of the invention is to provide a handle for an internal combustion engine rope starter wherein the starter rope is provided with a knot or other abutment defined thereon wherein the handle may be assembled to the starter rope without removing the starter rope knot or abutment.

Another object of the invention is to provide a handle for an internal combustion engine starter rope wherein the handle may be easily assembled to the starter rope and consists of a relatively rigid element and a resilient element, the resilient element functioning to increase the comfort aspects of the handle and, also, serving to retain the assembly of the starter rope with the rigid element.

These and other objects of the invention arising from the details and relationships of the components of an embodiment thereof will be apparent from the following description and accompanying drawings wherein:

FIG. 1 is an elevational view of a starter in accord with the invention as assembled upon an engine, the engine shroud being shown in section,

FIG. 2 is a plan, sectional view of a starter in accord with the invention, the cranking wheel being shown in the operative position, as taken along section II—II of FIG. 1,

FIG. 3 is an exploded perspective view of the components constituting a recoil starter in accord with the invention,

FIG. 4 is an elevational, diametrical, sectional view of the assembled starter rope handle in accord with the invention, as taken along section IV—IV of FIG. 5, and

FIG. 5 is an elevational, sectional view as taken along section V—V of FIG. 4, the inner handle element being shown in elevation for purposes of illustration.

The environment in which the starter of the invention is employed is shown in FIG. 1, wherein an internal combustion engine is represented at **10**. In the disclosed arrangement, the engine **10** is of the vertical crankshaft type such as used in rotary lawn mowers, and includes a fly-

wheel **12** having a plurality of gear teeth **14** defined in the periphery thereof. A shroud **16** is disposed in a horizontal manner over the engine **10**, and is fastened to the engine by suitable brackets, not shown. The shroud **16** may completely encompass the entire upper region of the engine and hide the same from view, improving the aesthetic value of the lawnmower and also protecting the engine from grass clippings, dirt, etc.

The starter is mounted to the vertical side **18** of the engine **10** by means of a bracket **20** which may be formed of sheet metal. The bracket **20** is provided with formed leg portions **22** having bolt-receiving holes **24** defined therein, whereby the bracket may be bolted to the engine side by bolts **26**. The bracket **20** includes a rope retaining portion **28** defined thereon which extends at substantially right angles to the general configuration of the bracket, and a brake rotation limiting stud **30** is defined from the material of the bracket extending from the bracket in the same direction as the retainer portion **28**.

A headed cylindrical shaft **32** is welded on the bracket **20** adjacent the stud **30** and includes an outer end **34**. The shaft is recessed at **36** adjacent its outer end, and is centrally provided with a bore **38**.

A rope pulley **40** is rotatably mounted upon the shaft **32**. The rope pulley **40** is provided with a cylindrical bore adapted to be rotatably received upon the shaft, and the pulley includes a starter rope receiving groove **42** defined therein. A radial hole **44** is defined in the groove **42** whereby the inner end **46** of a starter rope **48** coiled within the groove may be inserted and knotted for affixing the rope inner end to the pulley **40**. The pulley **40** is provided with an axially extending annular portion **50** adjacent the pulley surface **52**, defines a recess **54** concentric to the axis of rotation of the pulley. The pulley **40** also includes an axially extending hub projection **56** having a plurality of spirally disposed ribs **58** formed thereon. The ribs **58** each include spaced parallel edges **60** disposed in a spiral manner for cooperating with the engine cranking wheel, as will be later described. The hub projection **56** is grooved at **62** to receive a stop washer **64** and snap ring assembly.

Preferably, the rope pulley **40** is formed of a synthetic plastic material having a hardness or durometer reading similar to that of the material of the starter rope. The starter rope **48**, preferably, is formed of braided nylon filaments and, for instance, the pulley may be formed of nylon or Delrin, a synthetic product manufactured by the Dow Chemical Company.

An engine cranking wheel **66** is mounted upon the pulley hub projection **56** and is axially movable thereon. The wheel **66** includes a hub **68** having a shaped bore **70** defined therein. The bore **70** includes a plurality of spirally disposed recesses or grooves **72** adapted to closely, yet slidably, receive the ribs **58** defined upon the pulley projection **56**.

The recesses **72** include opposed, spaced, spirally disposed edges **74** adapted to cooperate with the edges **60** of the ribs **58**. The hub **68** is provided with a concentric recess **76** including a radially extending shoulder. The recess **76** is of sufficient dimension as to receive the stop washer **64** as shown in FIG. 2.

The outer periphery of the cranking wheel **66** is provided with gear teeth **78** adapted to cooperate with the flywheel gear teeth **14**. The gear teeth **78** may be slightly bevelled on their right edges, FIG. 2, to facilitate engagement of the teeth **78** with the flywheel teeth **14**.

It is also desirable that the wheel **66** be formed of a synthetic plastic material such as nylon or Delrin. Preferably, the rope pulley **40** and wheel **66** are formed of dissimilar materials to prevent galling and adverse wear conditions between these components. Thus, if the pulley **90** is formed of Delrin, the wheel **66** will be formed of nylon. The self-lubricating qualities of nylon are of advantage, due to the axial sliding movement of the wheel **66** upon the projection **56**.

The crank wheel hub **68** is provided with an annular groove **80** which is adapted to cooperate with a friction brake clip **82**, FIG. 3. The brake clip **82** includes a pair of V-shaped hub-embracing portions **84** and a tail portion **86** adapted to receive the bracket stud **30**, FIG. 2. As the brake clip **82** is formed of a resilient wire, the portions **84** will resiliently embrace the wheel hub groove **80** and the stud **30** is of sufficient length to maintain engagement between the stud and the clip tail at all axial positions of the wheel **66**. The stud **30**, of course, prevents rotation of the brake clip **82** and the brake clip provides sufficient resistance to rotation of the cranking wheel **66** to produce axial displacement of the wheel upon the hub projection **56** as the rope pulley **40** rotates. The axial direction of movement of the wheel **66** upon the hub projection will depend upon the direction of rotation of the rope pulley.

A spring anchor **88** is affixed to the end **34** of the shaft **32**. The anchor **88** is in the form of a cup having a base portion **90** and an axial wall portion **92**. A hole is centrally defined in the base portion **90** for permitting the anchor to be received in recess **36** and for receiving a screw **94** which may be of the self-tapping type. The spring anchor is affixed to the end of the shaft and concentric therewith by threading screw **94** into bore **38**. The anchor axial wall **92** is lanced at **96** and deflected inwardly at **98** to define an edge at **96** for cooperation with the inner end of the rope pulley recoil spring. The inward deflection of the portion **98** will deflect the inner end of the recoil spring from an operative engagement with the spring anchor if there is a tendency for the inner end of the recoil spring to rotate in a spring-unwinding direction relative to the spring anchor, such as would occur if the starter rope broke.

The recoil spiral spring **100** is received within the rope pulley recess **54**, FIG. 2, and includes a hooked inner end **102** and a looped outer end **104**. The inner end **102** is adapted to cooperate with the spring anchor edge **96** and the loop end **104** fits over a stud **106** molded into the pulley **40**. In the event that the starter rope breaks, the inertia of the rope pulley caused by the very rapid unwinding of the spiral spring **100** will not damage the recoil spring, in that as soon as the tension in the spring is such as to prevent an operative engagement between the hooked inner end **102** and the spring anchor edge **96**, the spring inner end will be engaged by the anchor deflected portion **98** and held out of an operative relationship with the spring anchor until the pulley is again wound in the spring-winding direction, wherein the hooked end may again engage the anchor edge **96**.

The cover **108** includes a base portion and an axially extending wall portion, whereby the wall portion will fit over the rope pulley annular portion **50** in the manner shown in FIG. 2. Screw fasteners **110** extending through holes defined in the cover affix the cover **108** upon the rope pulley. The cover **108** and the recess **54**, therefore, form a dust-free chamber, in which the recoil spring **100** and the spring anchor **88** are received.

The bracket portion **28** includes a tapered rope-retaining slot **112** defined therein. As will be apparent from FIG. 1, the slot **112** is aligned with the pulley rope groove **42**. The purpose of the slot **112** is to retain the outer end of the starter rope after the starter has been assembled and the spiral recoil spring **100** "prewound" a turn or two. Prewinding of the recoil spring **100** is desirable to insure that the starter rope will be fully wound upon the pulley when the starter is not being operated. After the spring **100** has been prewound, the free end of the starter rope is inserted into the slot **112** and due to the V-configuration of the slot, the rope may be tightly pulled into the slot to prevent the tension being applied on the rope by the spiral spring from pulling the rope out of the slot.

A rope guide clip **114** is fastened to the rope retainer portion **28** and is in axial alignment with the pulley

groove **42**, as will be apparent from FIG. 1. The purpose of the guide **114** is to insure that the starter rope will be rewound in the pulley groove even though the tension in the starter rope, once the starter rope has been extended, is released at a faster rate than the rope is rewound upon the pulley.

Prior to the knot **116** being tied in the outer end of the starter rope **48**, a rope bushing plate **118** is placed upon the starter rope outer end. The plate **118** includes a pair of mounting holes **120** and a starter rope bushing **122** is affixed to the plate. The bushing **122** includes a bore through which the rope may freely slide and the bushing is free of any sharp edges which may tend to fray the rope. After the bushing plate is placed upon the rope, the rope is tied with the knot **116** at the outer end.

The recoil starter, in accord with the invention, is mounted to the side **18** of the engine **10** by bolts **26** extending through the holes **24** defined in the support bracket. The starter is mounted upon the engine so that axial movement of the cranking wheel **66** on the pulley hub projection **56** selectively engages and disengages the wheel gear teeth **78** with the flywheel gear teeth **14**. In FIG. 1, the disengaged position of the cranking wheel **66** is shown in full lines and the engaged position of the flywheel is shown in dotted lines.

The engine shroud **16** is provided with an opening **124** of sufficient dimension to permit the bushing plate **118** to be inserted upwardly therethrough. Thereupon, the plate **118** is attached to the shroud **16** by fasteners **126** extending through holes **120**. Of course, the plate **118** is attached to the shroud in alignment with the rope pulley groove **42** wherein the rope portion **128** is substantially tangential to the rope coiled upon the rope pulley. During mounting of the starter upon the engine, the outer end of the starter rope will be held in the retainer slot **112**. A sufficient amount of starter rope may be uncoiled from the pulley **40** and located between slot **112** and knot **116** to permit the above assembly procedure and, thus, the operator does not have to "fight" the tendency for the rope to recoil on the pulley during assembly to the starter to the engine and shroud.

When the plate **118** is fastened to the shroud, the rope handle **130** may be attached to the rope end.

The rope handle **130** consists of two elements. The inner element **132**, preferably, is formed of a rigid material, such as a synthetic plastic material as nylon or Delrin, and includes a substantially cylindrical body portion **124** having an exterior surface **136** and a bottom surface **138**. A gripping portion **140** is defined on the body portion and extends transversely thereof. The body portion **134** is formed with an internal chamber **142** which is of sufficient dimension to receive the knot **116**. A rope outlet slot **144** is defined in the bottom of the body portion and intersects the bottom surface **138** and the exterior surface **136**. The width of the slot **144** is such as to substantially equal the width of the starter rope, and is less than the transverse dimension of the knot. An opening **146** is formed in the exterior surface of the body portion **134** intersecting the chamber **142** and the slot **144**. The opening **146** is substantially perpendicularly related to the rope outlet slot and the portion of the rope to be received therein. The lower surface of the chamber **142** forms an abutment surface on which the knot will bear.

The outer element **148** of the handle **130** is preferably formed of a resilient molded material such as rubber, or the like. The element **148** includes an annular collar **150** having a bore defined therein which is of a diameter substantially equal to that of the body portion **134**. The element **148** is formed with a transversally extending portion **152** in which a recess **154** is defined corresponding to the gripping portion **140** of the inner handle element **132**.

To assemble the handle **130** to the end of the starter rope, the knotted end of the starter rope is inserted

through the bore of collar **150**, as shown in FIG. 3. Thereupon, the knot **116** is placed within the chamber **142** defined in body portion **134** through opening **146**. The intersection of the slot **144** with the opening **146** and chamber **142** permits the rope to pass into the body portion in alignment with the axis thereof. Thereupon, the elements **132** and **148** are assembled, as will be apparent from FIGS. 4 and 5. In that the collar portion **150** closely receives the body portion **134**, the collar portion functions as a retainer to maintain the knot **116** within the chamber **142**, and an attractive, functional and comfortable pull handle for the starter rope **48** is provided.

As the aforedescribed assembly of the starter rope to the handle does not require that the knot **116** be untied, the assembly of the starter to the engine and shroud is substantially simplified, as compared to the case if a more conventional handle construction were utilized. After the handle is assembled to the starter rope, the operator will release the rope from the retainer slot **112** and the starter is now ready for use.

The normal position of the starter component is that shown in FIG. 1. Due to the "pretension" placed on the recoil spring **100**, the recoil spring will tend to wind the rope pulley **40** in a rope-recoiling direction. This biasing force will maintain the handle **130** in engagement with the bushing **122**, and due to the previous recoiling operation, the cranking wheel **66** will be adjacently disposed to the rope pulley **40**. Upon the operator grasping the handle **130** and pulling upwardly to uncoil the rope **48** from the rope pulley, the initial rotation of the rope pulley will cause the cranking wheel **66** to move axially on the hub projection **56**. This axial movement of the engine cranking wheel **66** is due to the resistance of rotation of the wheel produced by the frictional engagement with the brake clip **82** in the groove **80**. The axial movement of the wheel **66** causes the wheel to move into a driving engagement with the flywheel **12**. Axial movement of the wheel **66** toward the flywheel is limited by engagement of the stop washer **64** with the groove **76**. Once the cranking wheel gear teeth **78** are in mating engagement with the flywheel gear teeth **14**, rotation of the rope pulley **40** will rotate the cranking wheel **66** and flywheel to cause the engine to start. When the engine starts, the flywheel will tend to rotate the wheel **66** faster than the rotation of the rope pulley. This acceleration in the rotation of the cranking wheel will axially translate the wheel **66** on the hub projection **56** toward the rope pulley groove **42** and disengage the wheel **66** from the flywheel gear teeth. The operator will permit the starter rope **48** to retract into the rope groove **42** and if the wheel **66** is not directly disposed adjacent the rope pulley at this time, the frictional resistance to rotation of the wheel will cause the wheel to move adjacent the rope pulley to the position shown in full lines in FIG. 1. As the rope is wound on the pulley **40**, the guide **114** will insure that the rope enters the pulley groove. The starter components are now related as shown in FIG. 1 and ready for the next starting cycle.

The starter of the invention can be readily employed with a wide variety of motor constructions as it is only necessary to make modifications in the configuration of the support bracket **20** and the location of the mounting holes **24** to accommodate many engines. By employing a rope pulley having a hardness substantially equal to that of the rope **48**, fraying of the rope due to engagement with the pulley, particularly in the area of the hole **44**, is prevented. Also, by using dissimilar synthetic plastic materials for the rope pulley and the cranking wheel **66**, a self-lubricating, easily sliding operation is assured.

It is appreciated that various modifications to the invention may be apparent to those skilled in the art without departing from the spirit and scope thereof, and it is intended that the invention be defined only by the scope of the following claims.

I claim:

1. A recoil starter for internal combustion engines par-

ticularly adapted for mounting upon the side of an engine comprising, in combination,

(a) a support bracket having a cylindrical cantilever supported shaft extending therefrom, said shaft having a free end,

(b) a pulley rotatably mounted on said shaft having a starter rope-receiving groove defined therein, an outer radially extending face disposed remote from said bracket and an axially extending hub projection extending toward said bracket,

(c) an engine cranking wheel having engine engageable means defined thereon axially movably mounted upon said hub projection concentric to the axis of pulley rotation,

(d) means interconnecting said hub projection and wheel producing axial displacement of said wheel on said projection during initial angular displacement of said pulley with respect to said wheel and causing said wheel to be angularly locked with respect to said pulley at a predetermined axial position of said wheel upon said projection,

(e) a spring anchor defined at the free end of said shaft,

(f) a spiral recoil spring mounted adjacent said pulley outer face and having an inner end and an outer end, said spring inner end being connectible to said spring anchor and said outer end being connected to said pulley,

(g) brake means resisting rotation of said wheel, and

(h) a starter rope having an inner end connected to said pulley adapted to be wound within said pulley groove.

2. In a recoil starter as in claim 1 wherein:

(a) said pulley includes a recess defined therein having a closed bottom surface and a continuous annular wall,

(b) said recoil spring being received within said pulley recess, and

(c) a cover affixed to said pulley engaging said continuous wall and enclosing said recess whereby said recess and cover form a relatively dirt-free chamber for said recoil spring.

3. A handle for a starter rope having an abutment defined thereon of greater transverse dimension than the rope diameter comprising, in combination,

(a) a first handle element including a body portion having an exterior surface and a bottom surface,

(b) a chamber defined in said body portion of sufficient dimension to contain the rope abutment,

(c) a rope outlet slot defined in said body portion of a transverse dimension substantially equal to said rope diameter and less than that of the rope abutment, said slot intersecting said body portion exterior and bottom surface and communicating with said chamber,

(d) said body portion including an opening defined therein intersecting said exterior surface and said slot and communicating with said chamber and of sufficient dimension to receive the rope abutment whereby by placing of the rope abutment in said chamber through said opening permits said rope to extend from said chamber through said outlet slot, said opening being transversely disposed to the longitudinal length of the rope received within said slot, and

(e) retainer means mounted on said body portion retaining the rope abutment within said chamber.

4. In a handle for a rope starter as in claim 3 wherein:

(a) said retainer means comprises an annular collar circumscribing said body portion exterior surface.

5. In a handle for a starter rope as in claim 3 wherein:

(a) said first handle element includes a gripping portion affixed to said body portion and transversely related thereto,

(b) a second handle element having a recess defined

therein adapted to receive said first handle element gripping portion, and

(c) a bore defined in said second handle element intersecting said recess defined therein, said first handle element body portion being received within said bore whereby said second handle element comprises the retainer means retaining the rope abutment within said chamber.

6. In a handle for a starter rope as in claim 5 wherein:

(a) said first handle element is formed of a substantially rigid material, and

(b) said second handle element is formed of a resilient material.

7. A recoil starter for internal combustion engines particularly adapted for mounting upon the side of an engine comprising, in combination,

(a) a support bracket having a cylindrical shaft extending therefrom, said shaft having a free end,

(b) a pulley rotatably mounted on said shaft having a starter rope receiving groove defined therein and an axially extending hub projection,

(c) an engine cranking wheel having engine engageable means defined thereon axially movably mounted upon said hub projection concentric to the axis of pulley rotation,

(d) means interconnecting said hub projection and wheel producing axial displacement of said wheel on said projection during initial angular displacement of said pulley with respect to said wheel and causing said wheel to be angularly locked with respect to said pulley at a predetermined axial position of said wheel upon said projection,

(e) a spiral recoil spring having an inner end and an outer end, said outer end being connected to said pulley,

(f) a spring anchor defined at the free end of said shaft, said spring anchor comprising a cup affixed to the free end of said shaft, said cup including an axially extending wall portion extending in the axial direction of said shaft, a portion of said wall portion being lanced and deflected radially inwardly to define an axially extending edge in said cup wall portion adapted to be engaged by said recoil spiral spring inner end, said inwardly deflected portion preventing retaining engagement of said spring inner end with said cup upon said spring being unwound a predetermined degree,

(g) brake means resisting rotation of said wheel, and,

(h) a starter rope having an inner end connected to said pulley adapted to be wound within said pulley groove.

8. A recoil starter for internal combustion engines particularly adapted for mounting upon the side of an engine comprising, in combination,

(a) a support bracket having a cylindrical shaft extending therefrom, said shaft having a free end,

(b) a pulley rotatably mounted on said shaft having a starter rope receiving groove defined therein and an axially extending hub projection,

(c) an engine cranking wheel having engine engageable means defined thereon axially movably mounted upon said hub projection concentric to the axis of pulley rotation,

(d) means interconnecting said hub projection and wheel producing axial displacement of said wheel on said projection during initial angular displacement of said pulley with respect to said wheel and causing said wheel to be angularly locked with respect to said pulley at a predetermined axial position of said wheel upon said projection, said means comprising a spiral rib defined on said projection concentric with the axis of rotation of said pulley and extending substantially the axial length of said projection,

(e) a spiral groove defined in said wheel adapted to receive said rib,

(f) a spring anchor defined at the free end of said shaft,

(g) a spiral recoil spring having an inner end and an outer end, said spring inner end being connectible to said spring anchor and said outer end being connected to said pulley,

(h) brake means resisting rotation of said wheel, and,

(i) a starter rope having an inner end connected to said pulley adapted to be wound within said pulley groove.

9. A recoil starter for internal combustion engines particularly adapted for mounting upon the side of an engine comprising, in combination,

(a) a support bracket having a cylindrical shaft extending therefrom, said shaft having a free end,

(b) a pulley rotatably mounted on said shaft having a starter rope receiving groove defined therein and an axially extending hub projection,

(c) an engine cranking wheel having engine engageable means defined thereon axially movably mounted upon said hub projection concentric to the axis of pulley rotation,

(d) means interconnecting said hub projection and wheel producing axial displacement of said wheel on said projection during initial angular displacement of said pulley with respect to said wheel and causing said wheel to be angularly locked with respect to said

pulley at a predetermined axial position of said wheel upon said projection,

(e) a spring anchor defined at the free end of said shaft,

(f) a spiral recoil spring having an inner end and an outer end, said spring inner end being connectible to said spring anchor and said outer end being connected to said pulley,

(g) brake means resisting rotation of said wheel,

(h) a starter rope having an inner end connected to said pulley adapted to be wound within said pulley groove, and

(i) a rope retainer defined on said bracket, said rope retainer adapted to hold said starter rope to prevent unwinding of said pulley after said spiral spring has been partially wound and prior to said starter being completely installed upon an engine.

References Cited

UNITED STATES PATENTS

2,348,547	5/1944	Kissel	123—185
2,722,209	11/1955	Pillow	123—185
2,938,511	5/1960	Pike	123—185

RALPH D. BLAKESLEE, *Primary Examiner.*