Nov. 7, 1967 H. MAKOWSKY 3,350,737

TOOTHBRUSH WITH A DIVIDED PIVOTABLE BRUSH

Filed May 12, 1967 2 Sheets-Sheet 1

Fig.1

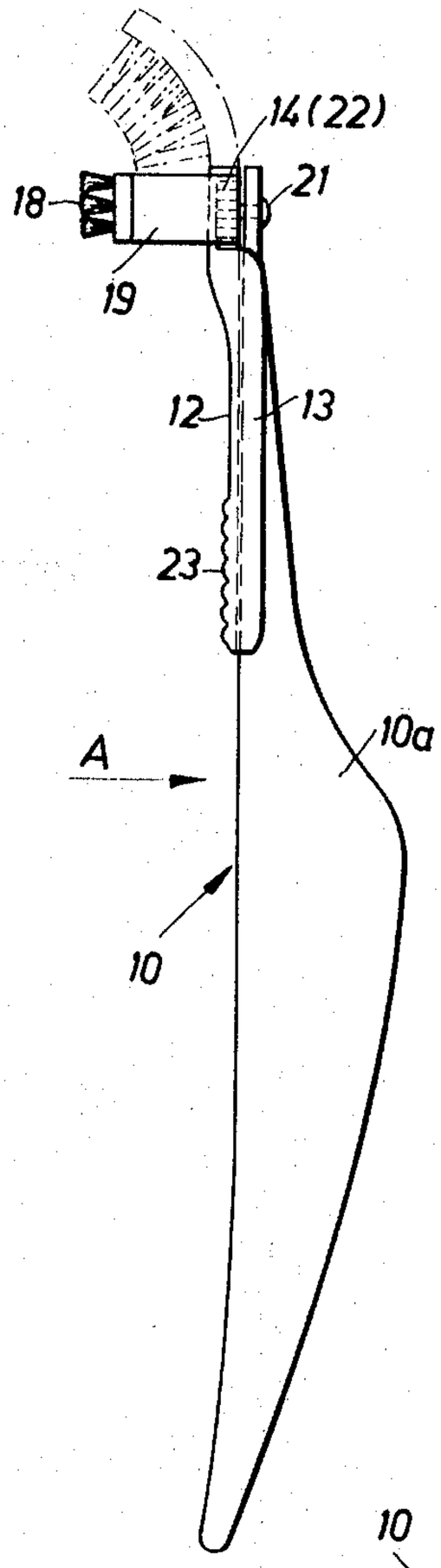

Fig.2

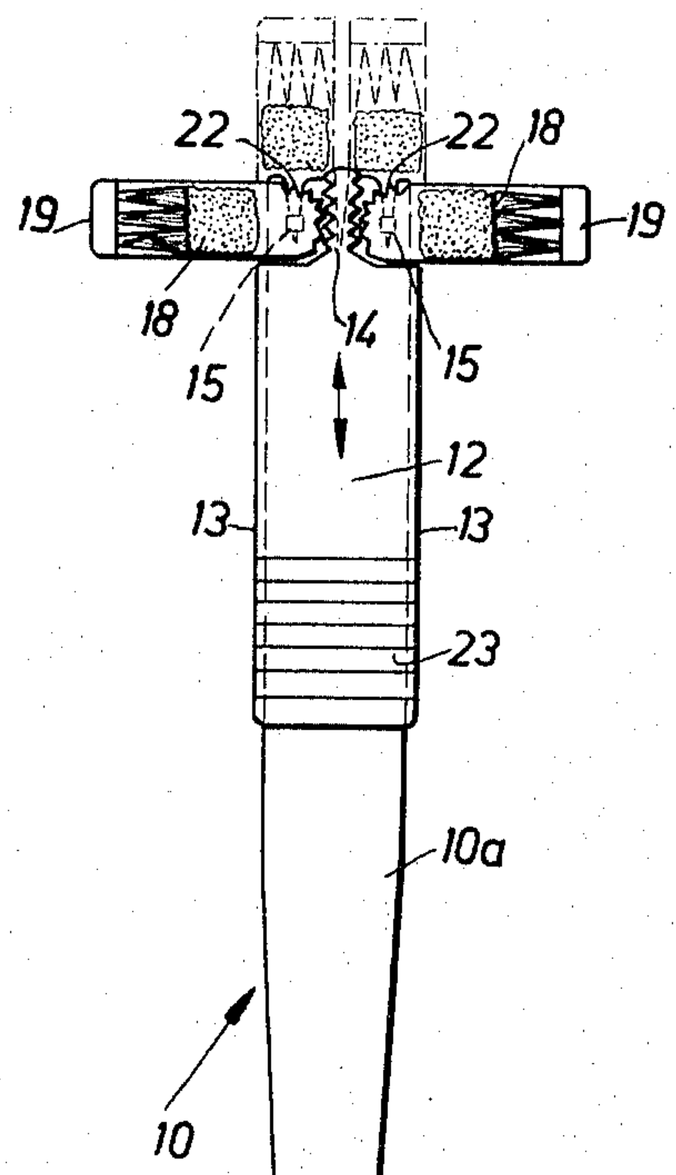

Fig.3

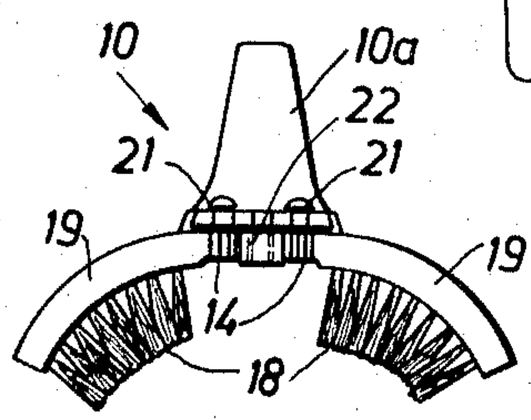

Inventor
HERBERT MAKOWSKY
By Lowry & Linehan
ATTYS.

Nov. 7, 1967 H. MAKOWSKY 3,350,737

TOOTHBRUSH WITH A DIVIDED PIVOTABLE BRUSH

Filed May 12, 1967 2 Sheets-Sheet 2

Fig.4

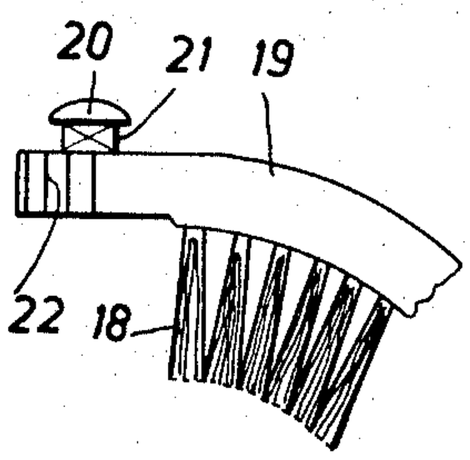

Fig.7

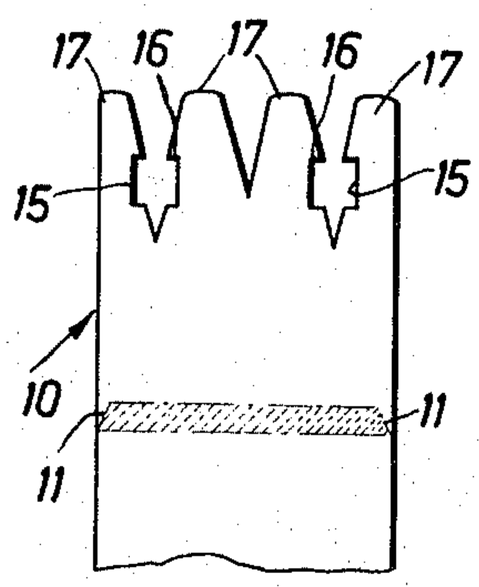

Fig.5

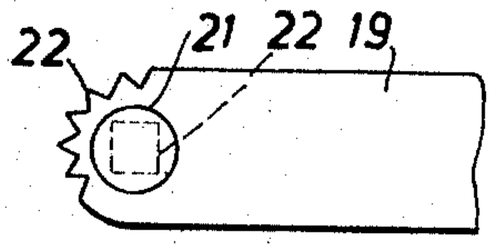

Fig. 8

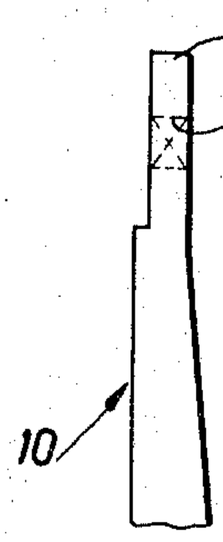

Fig.6

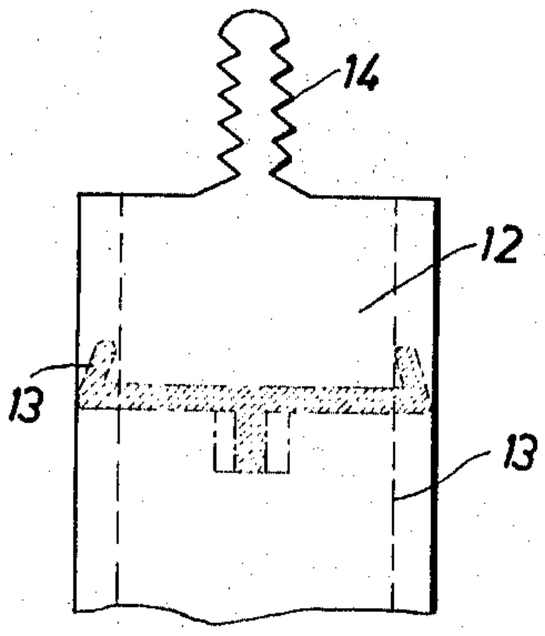

Inventor:
HERBERT MAKOWSKY
By Lowry & Rinehart
ATTYS.

United States Patent Office

3,350,737

Patented Nov. 7, 1967

3,350,737

TOOTHBRUSH WITH A DIVIDED PIVOTABLE BRUSH

Herbert Makowsky, 25 Wielandstrasse, Bremen, Germany

Filed May 12, 1967, Ser. No. 638,023
Claims priority, application Germany, May 18, 1966, M 55,215, M 69,537
4 Claims. (Cl. 15—172)

ABSTRACT OF THE DISCLOSURE

A toothbrush in which the brush is divided into two sections each mounted on a curved bristle holder, the said holders having their inner ends pivotally mounted on the outer end of a handle. The inner ends of the bristle holders are inter-engaged in such a manner that the holders are pivoted in a symmetrical and simultaneous movement. More specifically, the inner ends of the bristle holders have square-section studs pivotally mounted in two bearing recesses with dovetail entries for the resilient reception therein of the two square-section studs in such a manner as to produce a 90° snap action movement, in contrary directions, of the two bristle holders.

This invention relates to a toothbrush in which the brush is divided into two curved bristle holders having their adjacent inner ends pivotably mounted on the forward end of a handle and adapted to be deflected in relation to the handle through the intermediary of a slider.

Toothbrushes of this kind are well known in the art. While the known toothbrushes serve their intended purposes within certain inherent limitations, they have several disadvantages. To eliminate said disadvantages it is, therefore, an object of the present invention to provide a toothbrush of the afore-mentioned kind which is simple in construction, easy to operate, suitable for manufacture as a mass produced article and which will effectively and efficiently perform the purposes for which it is intended.

Another object of the invention is to improve the reliability of such toothbrush in use and operation.

The toothbrush according to the present invention is characterized by the following combination of features:

(a) Each bristle holder is formed at its end adjacent the other bristle holder with a toothed segment and on its back, which carries no bristles, with a headed square-section stud,

(b) The handle is formed at its forward end, carrying the bristle holders, with two bearing recesses with dovetailed entries for the resilient reception therein of the two headed square-section studs,

(c) The slider is positively slidably mounted on the handle and formed with a forwardly projecting two-sided rack for engaging in the toothed segments of both bristle holders in such a manner that sliding displacement of the slider on the handle produces a 90° snap action deflection in contrary directions of the two bristle holders by virtue of the headed square-section studs being forced to rotate between the resiliently yielding sides of the bearing recesses.

The combination of the above-specified features permits a toothbrush with deflectable bristle holders to be mass produced in an economical and simple manner.

The two bristle holders can be produced together with the headed square-section headed studs as integral injection mouldings. The toothed segment at the end of each bristle holder can be conveniently formed on the bristle holders during the moulding process.

Similarly the handle can be integrally produced and shaped in one operation with the required dovetail-ended

bearing recesses for the reception of the headed square-section studs. The slider can likewise be readily produced in one operation together with the forwardly projecting two-sided rack for engagement in the toothed segments at the adjacent inner ends of the two bristle holders. These parts are thus appropriately designed and constructed for mass production.

Conveniently the slider may be formed with undercut flanges for slidably embracing bevel cut edges on the handle.

This latter feature likewise contributes towards a general simplification and reduction of the cost of production of the several parts of the toothbrush and at the same time it permits the parts of the toothbrush to be quickly and easily assembled. The slider needs merely be slidably pushed onto the handle on which it is held by the cooperation of the undercut flanges with the bevel cut edges. The bristle holders can then be thrust through the throats of the dovetail entry ends of the bearing recesses, the dovetail ends resiliently yielding and then embracing the studs to retain them in the recesses. The square section studs are thus resiliently gripped and permit a snap action rotation of the bristle carriers through angles of 90°. When the two bristle holders have been mounted on the end of the handle their toothed segments are simultaneously engaged by the two-sided rack of the slider and are thus coupled for rotation in contrary directions between two relatively perpendicular end positions. When the bristle holders have been mounted and are in mesh with the two-sided rack they simultaneously hold the slider on the handle so that it can be slidably operated to control the positions of the two bristle holders.

According to another useful feature of the invention the front face of the slider is formed with groovings or flutings to facilitate operation of the slider with the thumb.

The proposed toothbrush is convenient to handle. The required position of the bristle holders can be easily selected by pushing the slider up or down with the thumb. The bristle holders can thus be set to form an arched brush extending crosswise of the handle or a twin brush extending in alignment with the longitudinal axis of the handle, according to whether the outside or the inside of the teeth is to be cleaned. The snap action due to the square-section studs being resiliently gripped between the sides of the bearing recesses ensures that the brush is reliably and firmly retained in either of its two end positions and will continue to be so retained even after prolonged use. The two bristle holders can be controlled with one hand.

A preferred embodiment of the invention will now be described by way of example and with reference to the accompanying drawings, in which:

FIG. 1 is a schematic side elevational view of a toothbrush according to the invention;

FIG. 2 is a front view of the toothbrush seen in the direction of the arrow A in FIG. 1, the right-hand bristle holder being not shown;

FIG. 3 is a top plan view thereof;

FIG. 4 is a top plan view, on a larger scale, of part of one of the bristle holders;

FIG. 5 is a fragmentary rear view of the bristle holder shown in FIG. 4;

FIG. 6 is a front view, on a larger scale, of the upper end of the slider, the cross section of the slider being likewise indicated;

FIG. 7 is a front view, on a larger scale, of the upper end of the handle, the cross section of this end of the handle being also indicated, and

FIG. 8 is a side view of the handle end shown in FIG. 7.

With reference to the drawings, a toothbrush according to the invention comprises two curved bristle holders **19** each provided with bristles **18**, the two bristle holders to-

gether constituting one brush. The back of each bristle holder **19** is integrally formed with a square section stud **20** with a retaining head **21**, whereas the adjacent inner ends of the bristle holders are each constructed in the form of a toothed segment **22**. As can be seen from FIG. 7, the toothbrush has a handle **10** with bevel cut edges **11** to provide a slideway for a slider **12** shown in FIG. 6. The handle **10** may consist of any suitable elastic material, for instance of a chromised light metal. As shown in FIG. 7, the end of the handle **10** which carries the bristle holders **19** is formed with two side by side recesses **15** with dovetailed entries **16** in the forward end **17** of the handle **10**. The back of the handle **10** is formed with an elevated longitudinal rib **10***a* having indentations **10***a*$_1$ in both longitudinal sides.

In cross section the slider **12** has undercut flanges **13** shown in FIG. 6 and adapted slidably to embrace the bevel cut edges **11** of the handle **10**. Moreover, at its forward end facing the bristle holders **19** the slider **12** is formed with a two-sided rack **14**. The slider **12** can be mounted on the handle **10** by sliding it on from the tapered back end of the handle **10**.

The square-section studs **20** of the bristle holders **19** are pushed into the dovetailed entries **16** of the recesses **15** in the forward end **17** of the handle **10** and are resiliently pivotably received into the recesses **15** and retained therein by the undercut of the dovetailed entries **16**. The toothed segments **22** of the two bristle holders **19** mesh with the two-sided rack **14**. Thus it is ensured that the slider **12** is slidable on the handle **10** but at the same time undetachably mounted. The toothed segments **22** mesh with the two-sided rack **14**. By the slidable displacement of the slider **12** the bristle holders **19** can thus be deflected contrariwise through angles of 90° from positions crosswise of the handle **10** into positions in which they are parallel and in alignment with the handle, the square section of the studs **20** working in the resilient bearing recesses **15** generating a snap action movement.

For the convenient handling of the toothbrush as proposed by the invention the front face of the slider **12** is provided with a profiling **23** to provide grip for operating the slider with the thumb, and the back of the handle is formed with the elevated longitudinal rib **10***a* which lies comfortably in the palm of the hand. The described toothbrush permits the insides and outsides of the teeth to be very effectively and easily cleaned by moving the brush up and down.

In a simplified embodiment of the invention the two-sided rack **14** and a special actuating element for the bristle holders **19** can be dispensed with. Instead, the two toothed segments **22** of the bristle holders **19** may be arranged directly to mesh in such a manner that the manual deflection of one of the bristle holders by hand will simultaneously rotate the other bristle holder symmetrically thereto because of the interengagement of the two toothed segments **22**. A toothbrush of the latter form of construction is also economically producible by mass production methods.

The invention may be embodied in other specific forms without departing from the spirit or essential characteristics thereof. The present embodiment is therefore to be considered in all respects as illustrative and not restrictive, the scope of the invention being indicated by the appended claims rather than by the foregoing description and all changes which come within the meaning and range of equivalency of the claims are therefore intended to be embraced therein. For instance, alternative actuating means for the bristle holders **19** may be provided in place of the two-sided rack **14** and the co-operating toothed segments **22** for operating the two bristle holders **19** in the manner required.

I claim:

1. In a toothbrush with a divided brush consisting of two curved bristle holders having their adjacent inner ends pivotably mounted on the forward end of a handle for common actuation by a slider the combination of the following features:

(a) each bristle holder is formed at its end adjacent the other bristle holder with a toothed segment and on its back, which carries no bristles, with a headed square-section stud,

(b) the handle is formed at its forward end, carrying the bristle holders, with two bearing recesses with dovetailed entries for the resilient reception therein of the two headed square-section studs,

(c) the slider is positively slidably mounted on the handle and formed with a forwardly projecting two-sided rack for engaging in the toothed segments of both bristle holders in such a manner that sliding displacement of the slider on the handle produces a 90° snap action deflection in contrary directions of the two bristle holders by virtue of the headed square-section studs being forced to rotate between the resiliently yielding sides of the bearing recesses.

2. A toothbrush as claimed in claim **1**, wherein the slider is provided with undercut flanges for slidably embracing the edges of the handle.

3. A toothbrush as claimed in claim **1**, wherein the slider is formed with a profiled surface on its front face to provide a grip for the thumb for the slidable displacement of said slider on said handle.

4. A modification of the toothbrush as claimed in claim **1**, wherein the two-sided rack is omitted and the toothed segments on the inner ends of the bristle holders directly engage for pivotably coupling the bristle holders together.

References Cited

UNITED STATES PATENTS

1,680,558	8/1928	Loiselle	15—172
2,625,697	1/1953	Cyser	15—167 X
2,799,878	7/1957	Brausch	15—26 X
3,193,864	7/1965	Makowsky	15—167 X
3,204,275	9/1965	Baker	15—167 X

CHARLES A. WILLMUTH, *Primary Examiner.*

P. FELDMAN, *Assistant Examiner.*