June 27, 1967 H. BRANDT 3,327,770

ROTARY REGENERATIVE HEAT EXCHANGERS

Filed Oct. 15, 1965 2 Sheets-Sheet 1

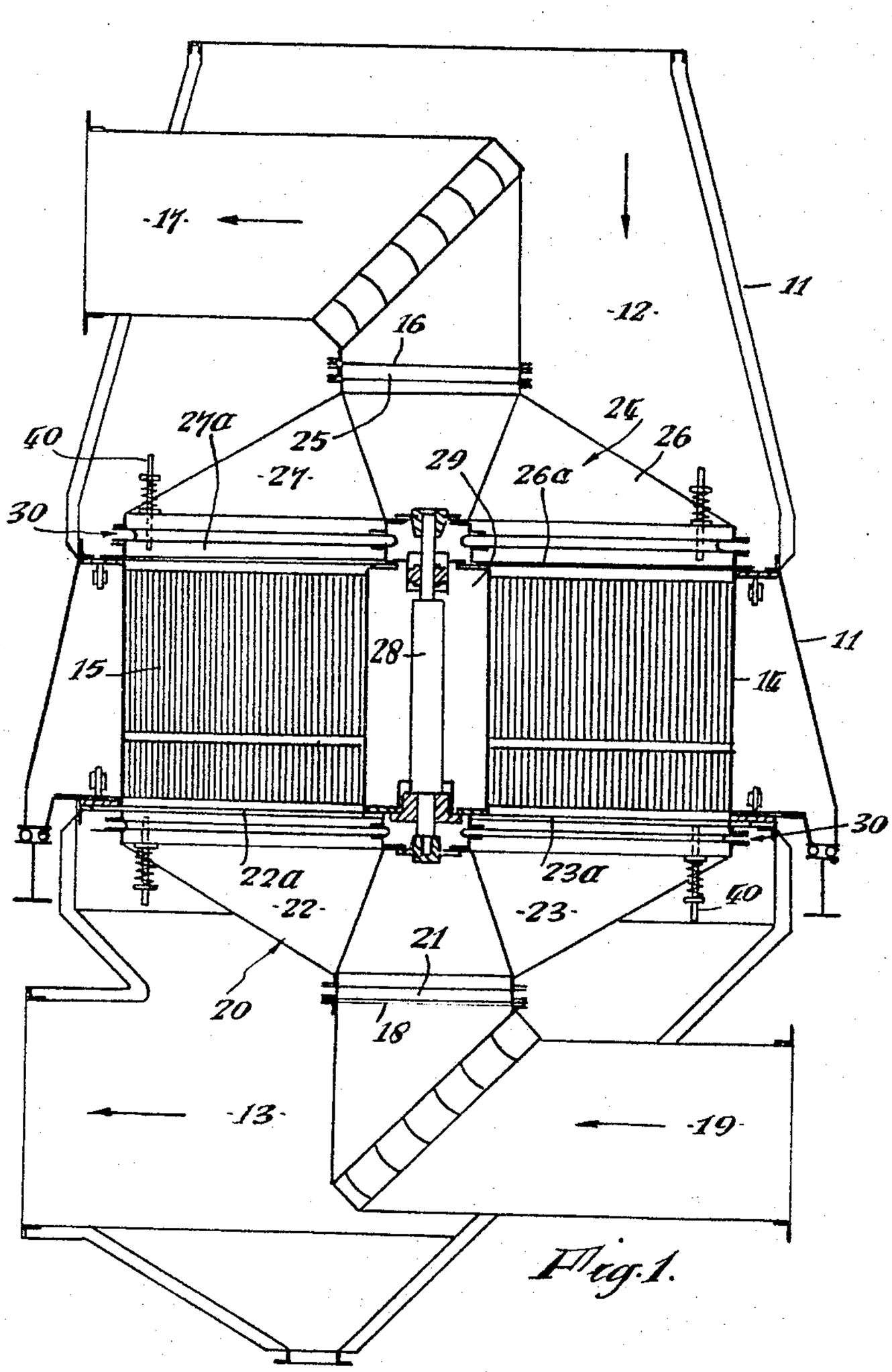

Fig. 1.

INVENTOR
HERBERT BRANDT
BY: Jacobs & Jacobs
His Attorneys

June 27, 1967 H. BRANDT 3,327,770

ROTARY REGENERATIVE HEAT EXCHANGERS

Filed Oct. 15, 1965 2 Sheets-Sheet 2

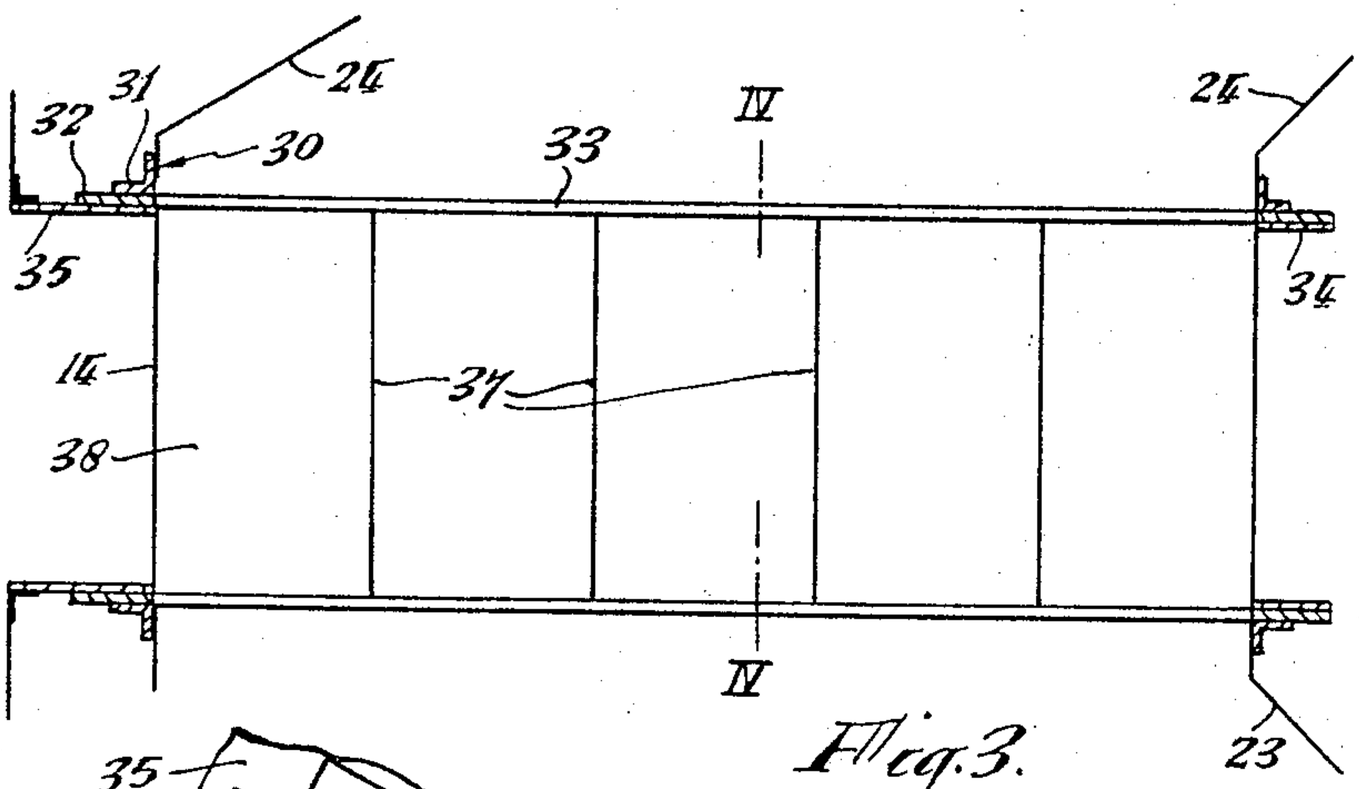

Fig. 3.

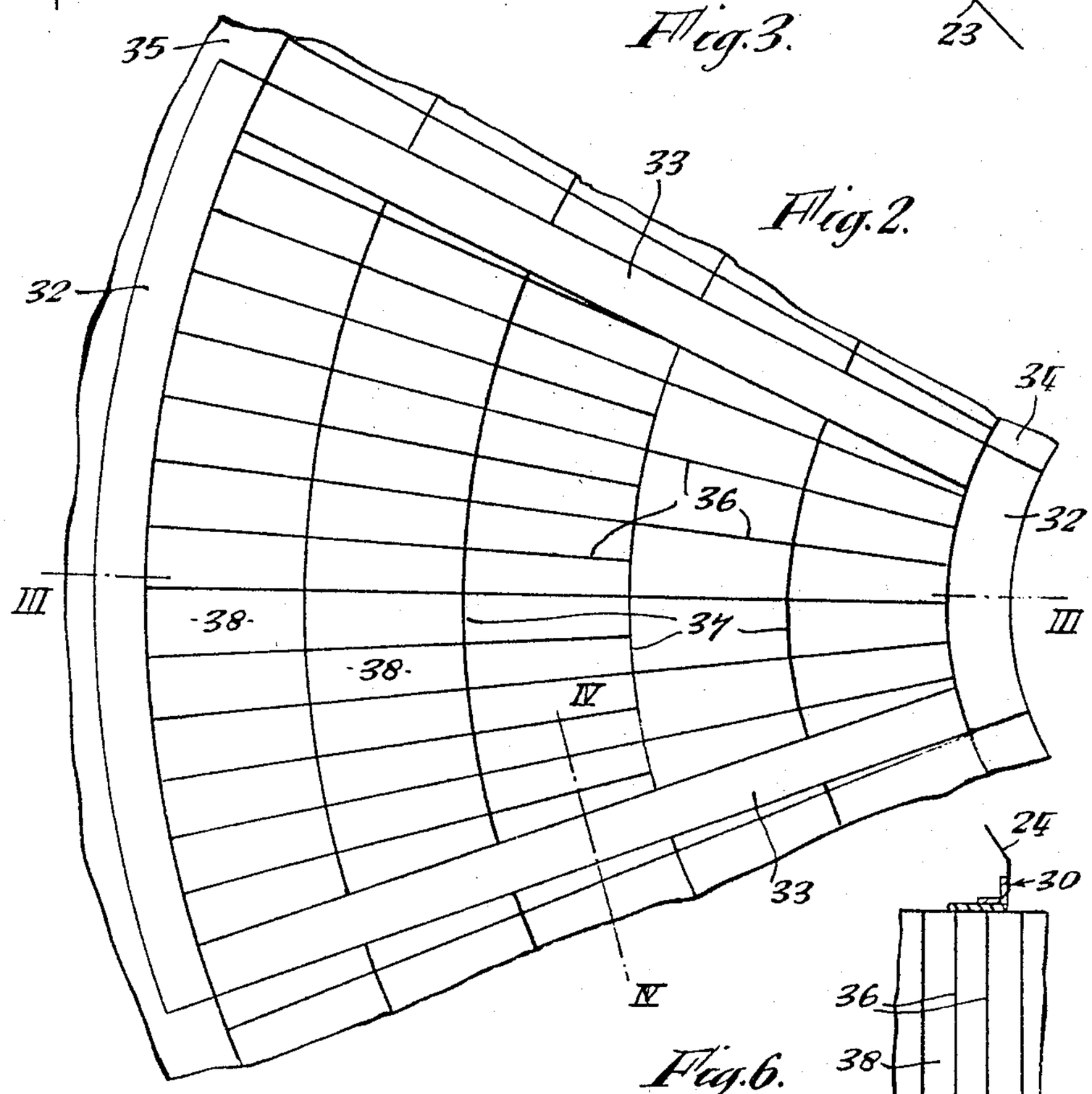

Fig. 2.

Fig. 6.

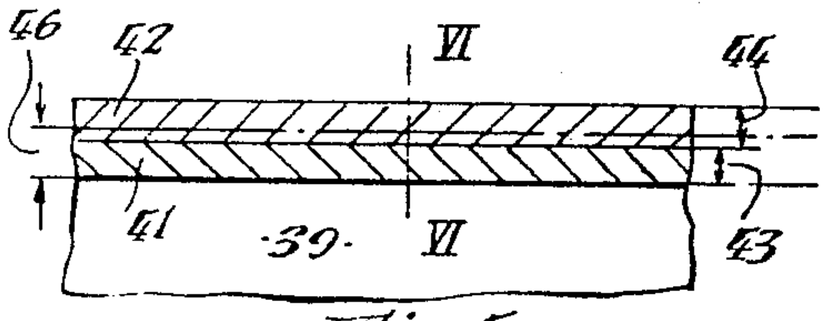

Fig. 5.

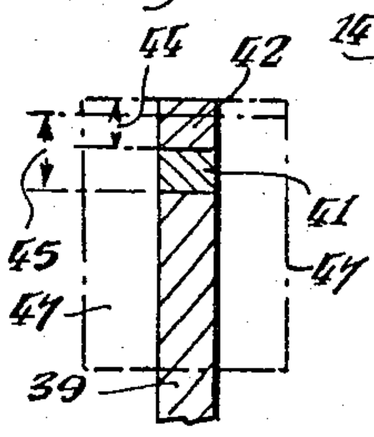

Fig. 4.

INVENTOR
HERBERT BRANDT
BY: Jacobs & Jacobs
His Attorneys

United States Patent Office

3,327,770

Patented June 27, 1967

3,327,770

ROTARY REGENERATIVE HEAT EXCHANGERS

Herbert Brandt, 5961 Rothemuhle uber Olpe, Westphalia, Germany

Filed Oct. 15, 1965, Ser. No. 496,558
Claims priority, application Germany, Oct. 24, 1964, A 22,628
4 Claims. (Cl. 165—9)

This invention relates to rotary regenerative heat exchangers of the kind which includes a substantially cylindrical regenerative heat exchange member, hereinafter referred to as a regenerator, which is subdivided by radial partitions and by concentric cylindrical partitions to form chambers each of which receives a pack of plates, the packs of plates in all of the chambers providing the heat exchange mass of the regenerator.

The heat exchanger also includes means for leading hot gas to one axial end (the hot end) of the regenerator so that said gas will flow through the said mass and give up its heat thereto, the gas being withdrawn from the other axial end of the regenerator (the cold end) as cooled gas. There is also provided means for supplying cold air to the cold end of the regenerator so that said air will flow through the said mass, in counterflow to the gas, and take up heat from the mass, the air being withdrawn from the hot end of the regenerator as heated air.

In some cases the regenerator rotates about its axis, whilst the means for supplying said cold air and hot gas to the regenerator, and for withdrawing the cooled gas and heated air from the regenerator are stationary; in other cases the regenerator is stationary whilst the said air conducting means rotate about the projected axis of the regenerator. In either event, there is relative rotation between the regenerator and the air conducting means.

The air inlet and air outlet conducting means each includes a hood which is open at the end adjacent the axial end surface of the regenerator so that air may flow into and out of the regenerator from and to the said conducting means, and the said hood includes, around the periphery of the said open end, sealing means which slide over the end surfaces of the regenerator, during said relative rotation, to prevent undue leakage of air from the regenerator. The sealing means may make actual contact with the end surface of the regenerator, or there may be a gap of a predetermined dimension therebetween. Usually the said opening at the end of the air hood is of sector shape so that at any one period of time it covers a sector of the end of the cylindrical regenerator, and thus, during said relative rotation, sweeps over the whole of the end surface of the regenerator.

A frame around the periphery of the said open end of the air hood carries sealing strips which provide the actual sealing means, and the said frame is pressed towards the regenerator end surface by spring means which are adjustable to regulate the pressure of the sealing strips on to or towards the regenerator end surface.

The sealing strips usually are made of soft cast iron, and, at the outermost and innermost circumferential walls of the regenerator, ride upon substantially wide flanges on the edges of the said walls, and consequently at those places there is comparatively little wear of the sealing strips or of the said flanges. However, the radial partitions and the internal circumferential or arcuate partitions which form the chambers in the regenerator are comparatively thin, and consequently the movement thereover of the substantially radial sealing strips causes a comparatively large amount of wear at the edges of said partitions.

The object of the present invention is to provide improvements in the radial partitions and in the internal circumferential or arcuate partitions of the regenerator

whereby to minimise wear of the edges thereof during relative rotation between the regenerator and the air conducting hoods, and also to improve the bedding-down of the said edges in the initial operating stages of the regenerator.

According to this invention, a partition for use in the forming of chambers in the regenerator of a rotary regenerative heat exchanger, each of the said chambers being adapted to contain a mass of heat exchange material, comprises a metal plate on to edges of which plate are superimposed at least two layers of metal, the metal layer contiguous with the metal plate being formed of hard metal whilst the outermost metal layer is formed of soft metal, the said edges of the plate being those edges which are to be disposed at the axial ends of the regenerator.

Referring to the accompanying drawings:

FIG. 1 is a diagrammatic sectional elevation of a rotary regenerative heat exchanger, wherein the regenerator is stationary.

FIG. 2 is a plan view, that is looking along the axis of the regenerator, of part of the regenerator and of the sealing strips on the sealing frame around the opening of an air duct;

FIG. 3 is a sectional elevation taken on line III—III in FIG. 2;

FIG. 4 is a fragmentary cross-section taken on lines IV—IV in FIGS. 2 and 3.

FIG. 5 is a side elevation of a portion at an edge of a regenerator partition made according to this invention; and

FIG. 6 is a cross-section taken on line VI—VI in FIG. 5.

Referring to FIG. 1, a casing **11** provides at its top end a chamber **12** into which hot gases, from a suitable source, are admitted by means not shown, and the casing also has at its bottom end a chamber **13** from which the said gases, after giving up heat to the regenerator hereinafter referred to, are withdrawn by means not shown.

Between the chambers **12** and **13** there is a stationary cylindrical regenerator **14** which is provided with plates or tubes which provide a mass **15** which forms passages which are open at the ends of the regenerator. Thereby, the hot gas from the chamber **12** may flow through the mass **15**, give up heat to the said mass, and then pass on, as cool gas, to the chamber **13**.

Within the chamber **12**, and co-axial with the regenerator **14**, there is the open end **16** of an outlet air duct **17**, whilst within the chamber **13** there is a similar open end **18** of an inlet air duct **19**.

Below the generator **14** there is an air duct member **20** which has an axial neck **21** which is disposed in rotatable, air and gas tight, engagement with the end **18** of the air duct **19**, and has ducts **22** and **23** which have sector-shaped openings **22***a* and **23***a*, respectively, at their upper ends near to the bottom end face of the regenerator **14**.

Similarly, above the regenerator **14** there is an air duct member **24** which has an axial neck **25** which is disposed in rotatable, air and gas tight, engagement with the end **16** of the air duct **17**, and has ducts **26** and **27** which have sector-shaped openings **26***a* and **27***a*, respectively, at their lower ends near to the upper end face of the regenerator **14**.

The bottom openings **26***a* and **27***a* of the ducts **26** and **27** are opposed, in the axial direction of the regenerator, to the upper openings **22***a* and **23***a* of the ducts **22** and **23**, respectively, that is, the openings **26***a* and **27***a* of the ducts **26** and **27** are disposed in mirror-image manner to the openings **22***a* and **23***a* of the ducts **22** and **23**, so that air emitted from the ducts **26** and **27** will pass through the regenerator and into the ducts **22** and **23**.

The two air duct members **20** and **24** are both secured to a driving shaft **28** which passes vertically through an axial opening **29** in the regenerator **14** to provide a rotation drive to the duct members in known manner.

It is desirable that there be as little leakage of fluid as possible between the air ducts **22, 23, 26, 27** and the gas chambers **12, 13** and for this purpose sealing assemblies **30** are disposed around the peripheries of the openings **22***a*, **23***a*, **26***a* and **27***a* of the ducts **22, 23, 26, 27.**

The sealing assemblies **30** comprise a frame **31** which is provided with sealing strips **32, 33** which slide over the axial end surfaces of the regenerator during rotation of the air duct members. The sealing frames **31** are pressed towards the end surfaces of the regenerator by spring devices **40** which are adjustable to regulate the said pressure.

As shown in FIG. 2, the sealing strips **32** and **33**, when mounted on the sealing frame, have the shape of a quadrant. When the air ducts rotate relatively to the regenerator **14**, the arcuate sealing strips **32** slide over the inner circumferential flange **34** and the outer circumferential flange **35** of the regenerator. As the sealing strips **32** are made of soft cast iron, and the flanges **34** and **35** are comparatively wide, there is comparatively little wear of the said flanges. If the sealing strips **32** and **33** do wear, they can be replaced comparatively easily.

The radial sealing strips **33** slide laterally over the edges of the radial and circumferential partitions **36** and **37** of the regenerator **14**, which partitions form the chambers **38** which contain the mass of heat transfer material. As the said partitions **36** and **37** are comparatively thin, they are worn down comparatively quickly.

A fragment of an improved partition **36** made according to one embodiment of the invention is shown in FIGS. 5 and 6.

The partition comprises a mild steel plate **39** on to an edge of which is first attached a layer **41** of hard metal and then an outer layer **42** of soft metal. Both edges of the plate which are at the axial ends of the regenerator are so formed. The hard metal layer **41** may be of steel having a Brinell hardness of at least 50 more than the soft metal layer **42** which also may be of steel; for example, the hard layer **41** may have a Brinell hardness of 150 whilst the soft layer **42** has a Brinell hardness of 90. The thickness **43** (that is, in the axial direction of the regenerator) of the hard metal layer may be 4 mm., whilst the thickness **44** of the soft metal layer may be 6 mm. when initially attached to the plate **39**. Before the plate **39** is assembled into a regenerator there may be deviations (which in some cases may amount to 2 mm. or 3 mm.) in the outer face of the soft layer **42** from an exact level, due to inaccuracies in manufacture; therefore, the soft layer **42** is machined down to approximately 4 mm. so as to give a combined thickness **45** of the two layers **41** and **42** measuring approximately 8 mm. Even so, the machined surface of the soft layer **42** may deviate approximately 0.5 mm. from an exact level.

When the plate **39** has been assembled, with other similarly formed plates, in the regenerator to provide the partitions **36** and **37** (FIGS. 2–4), and during the initial running-in or bedding-down period of the heat exchanger (or of a new or repaired regenerator **14**), the rotary movement of the radial sealing strips **33** across the edges of the radial partitions **36** and along the edges of circumferential partitions **37** will gradually remove some of the soft metal of the edge layer **42** until a surface is produced to leave the combined thickness **46** of the two layers **41** and **42** measuring approximately 5 mm.; however, this bedding-down process will also take care of any differences (which may amount up to 1.5 mm.) in the sealing gaps between the radial sealing strips **33** and the

edges of the partitions **36, 37**, which differences may be caused by thermal expansion during operation of the heat exchanger, with the result that after such bedding-down there are substantially no variations in the dimensions of the said sealing gaps.

During the said bedding-down process, and subsequent thereto if necessary, the spring pressure devices **40** over the whole of the area of each sealing frame **31** are adjusted to allow an optimum movement thereof during normal operation of the heat exchanger.

During the said bedding-down process the soft metal layer **42** becomes further bound on to the hard metal layer **41**, and indeed some of the soft metal from the layer **42** may be pressed into pores of the hard metal in the layer **41** or be otherwise fused thereto, so that a substantially antifriction surface is produced (it being known that an intimate combination of hard and soft metal produces a good antifriction material). Further wear of the edges of the partitions thereby is minimised.

The layers of hard metal (**41**) and soft metal (**42**) may be applied to the plate **39** in any suitable manner. Preferably, however, the layers are applied by welding the appropriate metal on to the plate. The welding on of the metal may be effected by the use of appropriate filler rods or wires or powdered metal.

A suitable manner of welding the metal on to the plate **39** is shown in FIG. 6. Therein, copper plates **47** are applied to both sides of the plate **39** to form a channel into which the metal layers **41** and **42** are built up by welding. The copper plates **47** are removed from the plate **39** after the layers **41** and **42** have been formed.

There may be more than two layers of metal superimposed on the edge of the plate **39**, at least the layer contiguous with the plate being formed of hard metal whilst at least the outermost layer is formed of soft metal.

The invention may be applied to the renovation of worn partitions.

What I claim and desire to secure by Letters Patent is:

1. A partition forming chambers in the regenerator of a rotary regenerative heat exchanger, each of the said chambers being adapted to contain a mass of heat exchange material, comprising a metal plate on to edges of which plate are superimposed at least two layers of metal, the metal layer contiguous with the metal plate being formed of hard metal whilst the outermost metal layer is formed of soft metal, the said edges of the plate being those edges which are to be disposed at the axial ends of the regenerator.

2. A partition according to claim **1** characterised in that the said layers of metal are superimposed on the edge of the plate by built-up welding of appropriate metal.

3. A partition according to claim **2** wherein the appropriate metal for a layer is provided in the form of a filler rod.

4. A partition according to claim **2** wherein the appropriate metal for a layer is provided in the form of powder.

References Cited

UNITED STATES PATENTS

2,517,512	8/1950	Tigges et al.	165—9
2,674,442	4/1954	Hammond et al.	165—9
3,010,704	11/1961	Egbert	165—9
3,027,144	3/1962	Hess et al.	165—9
3,208,509	9/1965	Bloss et al.	165—9

ROBERT A. O'LEARY, *Primary Examiner.*

A. W. DAVIS, *Assistant Examiner.*