March 28, 1967 E. J. SARRING ETAL 3,311,368

HIGH SPEED SIGNATURE GATHERING MACHINE

Filed July 10, 1963 12 Sheets-Sheet 1

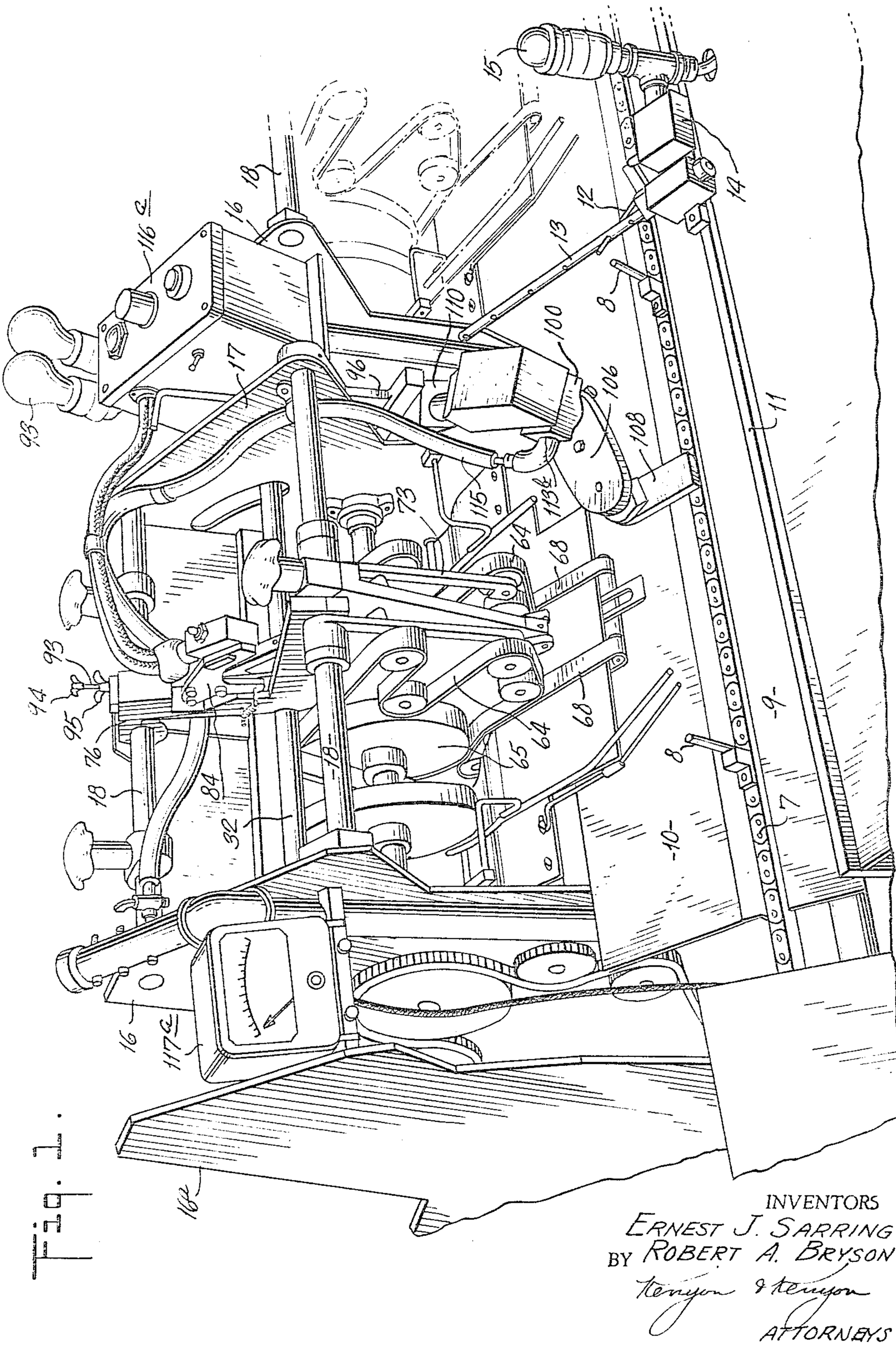

Fig. 1.

INVENTORS
ERNEST J. SARRING
BY ROBERT A. BRYSON
Kenyon & Kenyon
ATTORNEYS

March 28, 1967 E. J. SARRING ETAL 3,311,368

HIGH SPEED SIGNATURE GATHERING MACHINE

Filed July 10, 1963 12 Sheets-Sheet 2

Fig. 2.

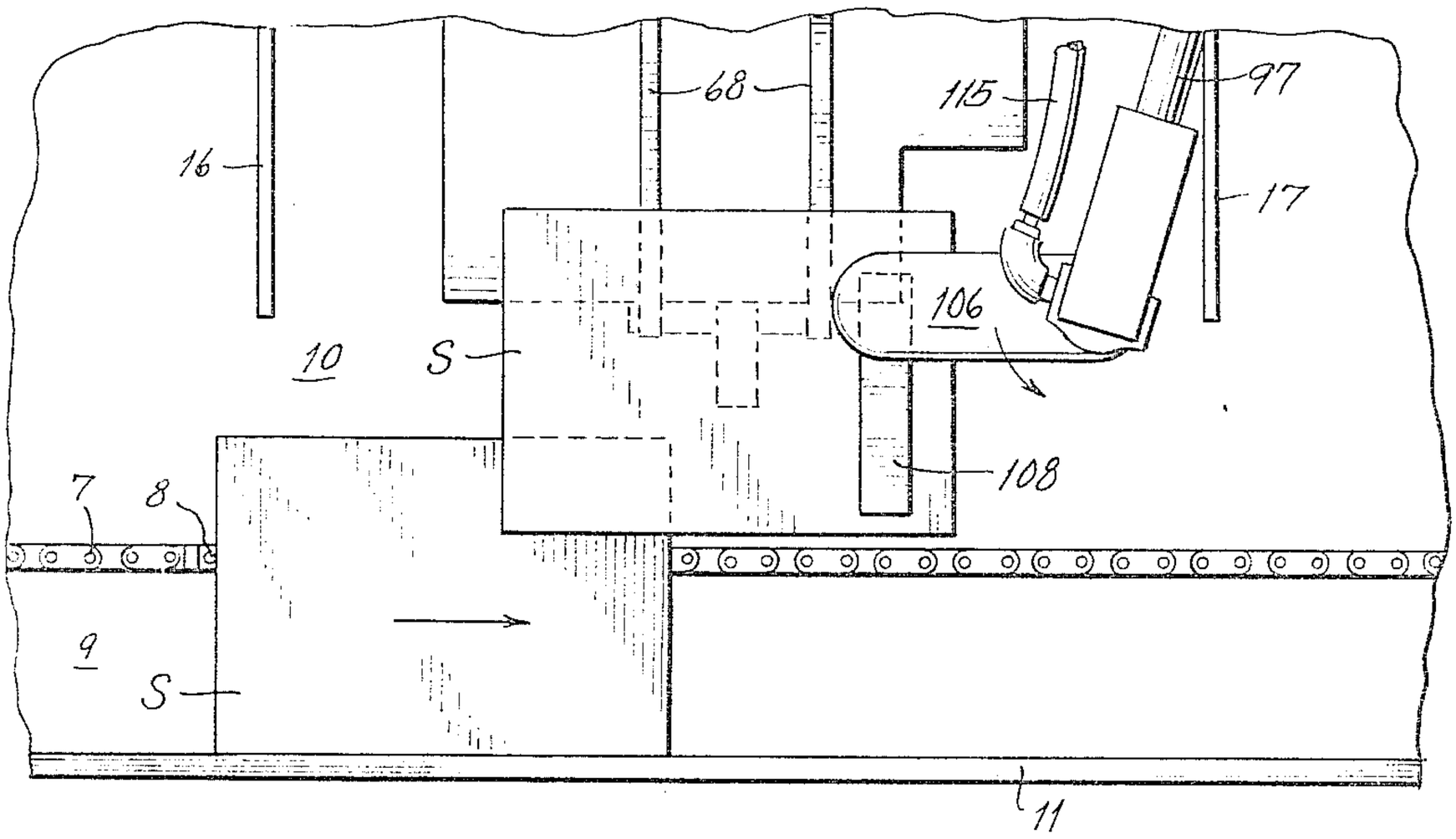

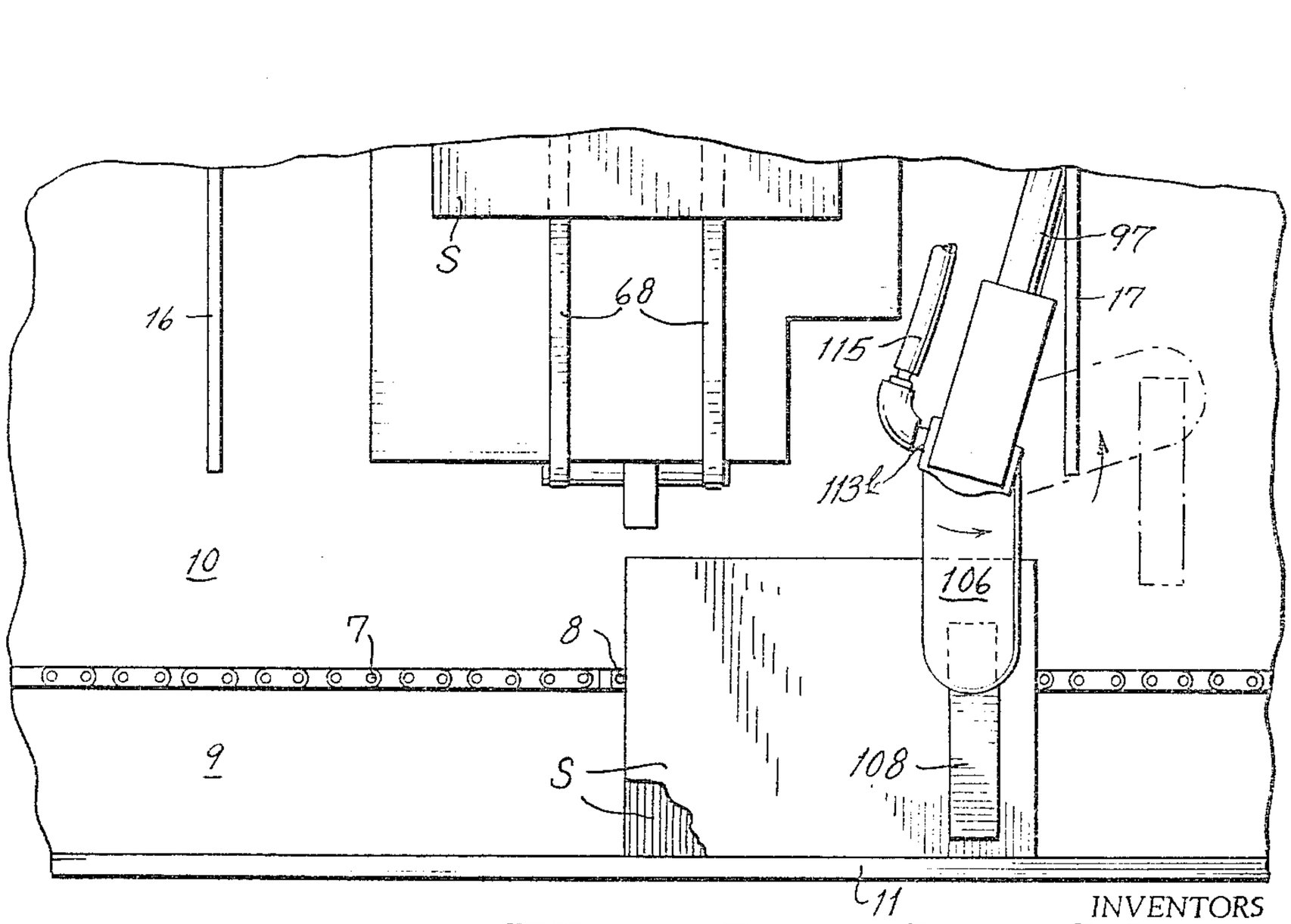

Fig. 3.

INVENTORS
ERNEST J. SARRING
BY ROBERT A. BRYSON
Kenyon & Kenyon
ATTORNEYS

March 28, 1967 E. J. SARRING ETAL 3,311,368

HIGH SPEED SIGNATURE GATHERING MACHINE

Filed July 10, 1963 12 Sheets-Sheet 3

Fig. 4.

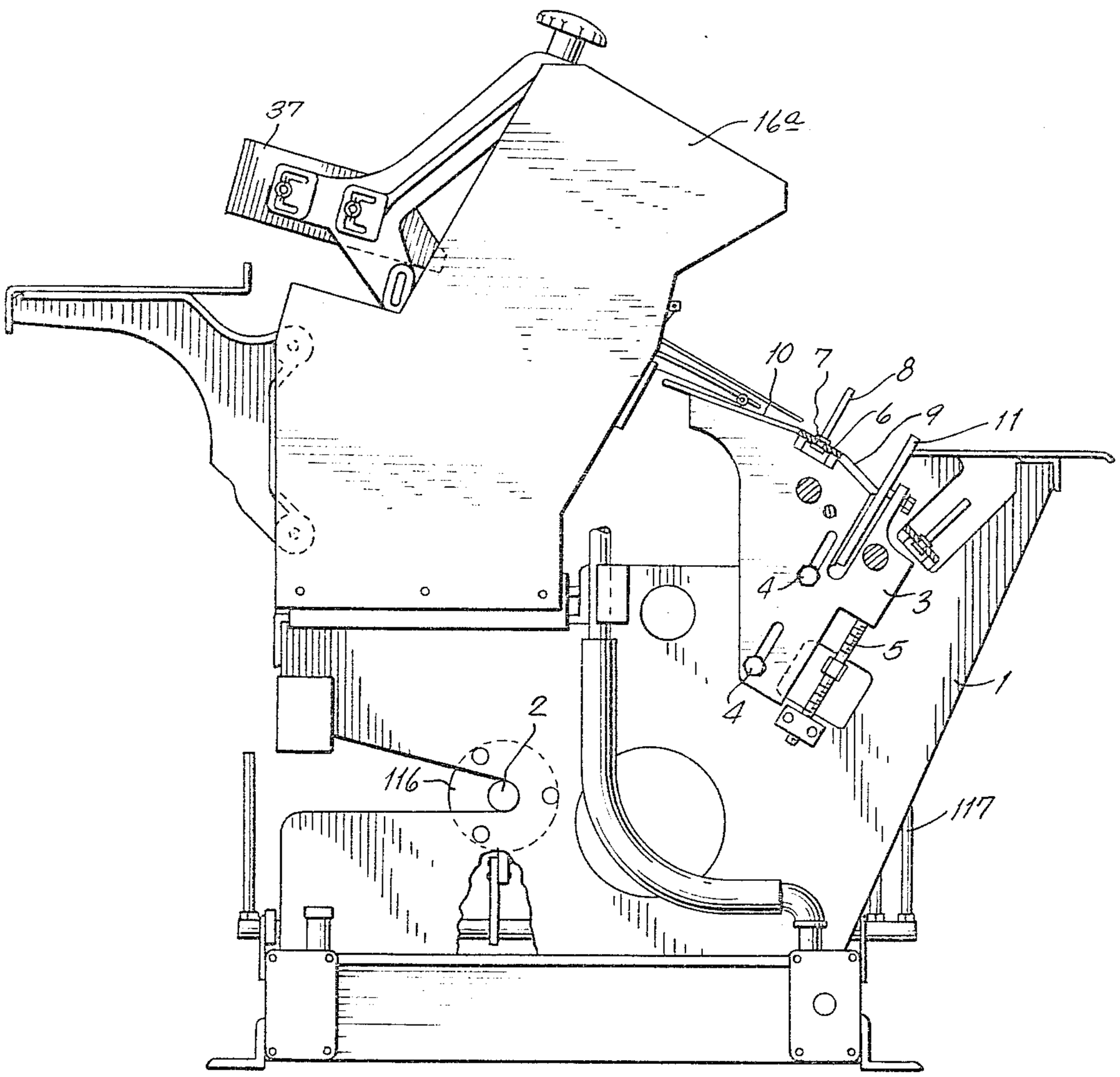

INVENTORS
ERNEST J. SARRING
BY ROBERT A. BRYSON
Kenyon & Kenyon
ATTORNEYS

March 28, 1967 E. J. SARRING ETAL 3,311,368

HIGH SPEED SIGNATURE GATHERING MACHINE

Filed July 10, 1963 12 Sheets-Sheet 4

Fig. 5.

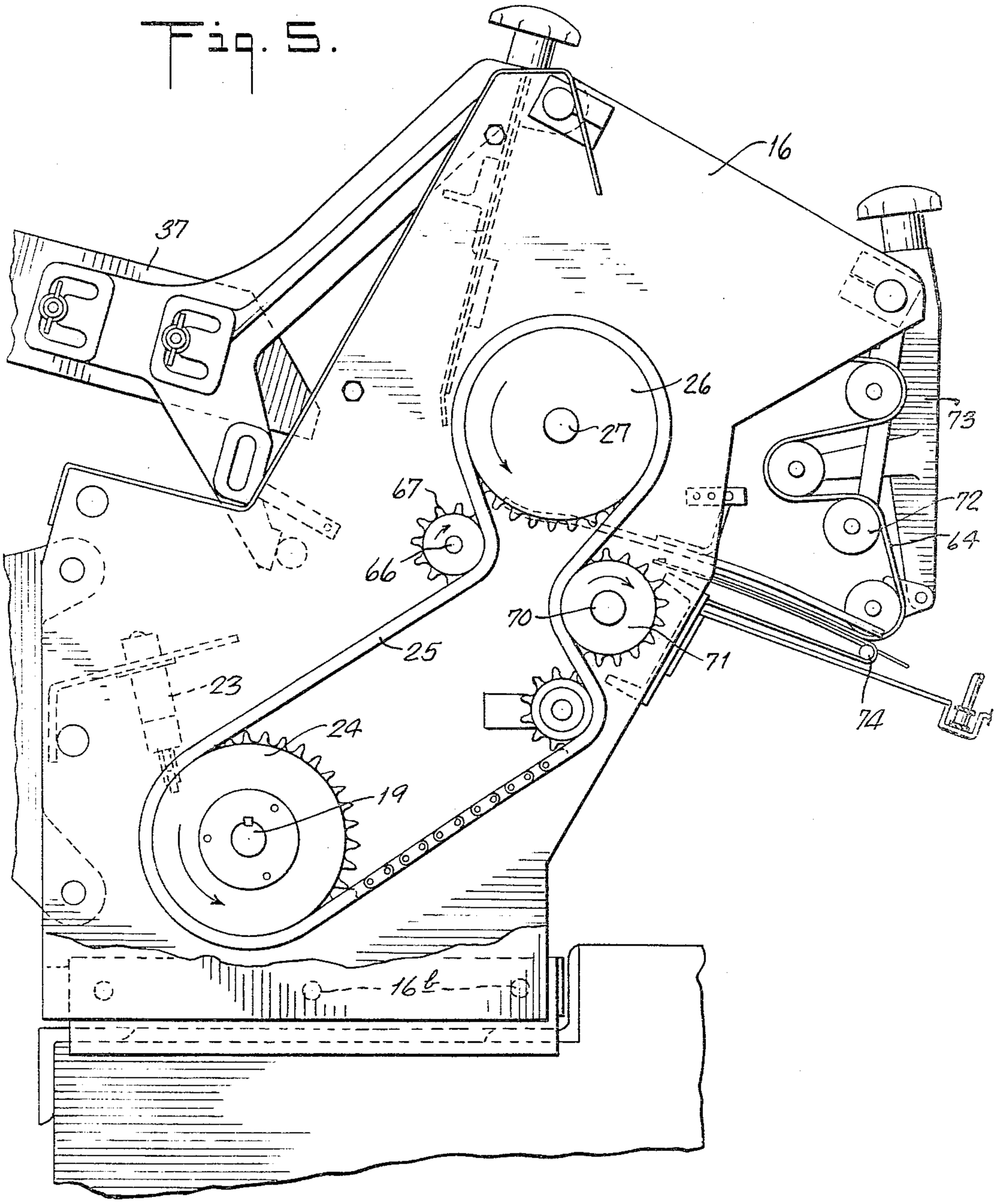

INVENTORS
ERNEST J. SARRING
BY ROBERT A. BRYSON
Kenyon & Kenyon
ATTORNEYS

March 28, 1967 E. J. SARRING ETAL 3,311,368

HIGH SPEED SIGNATURE GATHERING MACHINE

Filed July 10, 1963 12 Sheets-Sheet 5

Fig. 6.

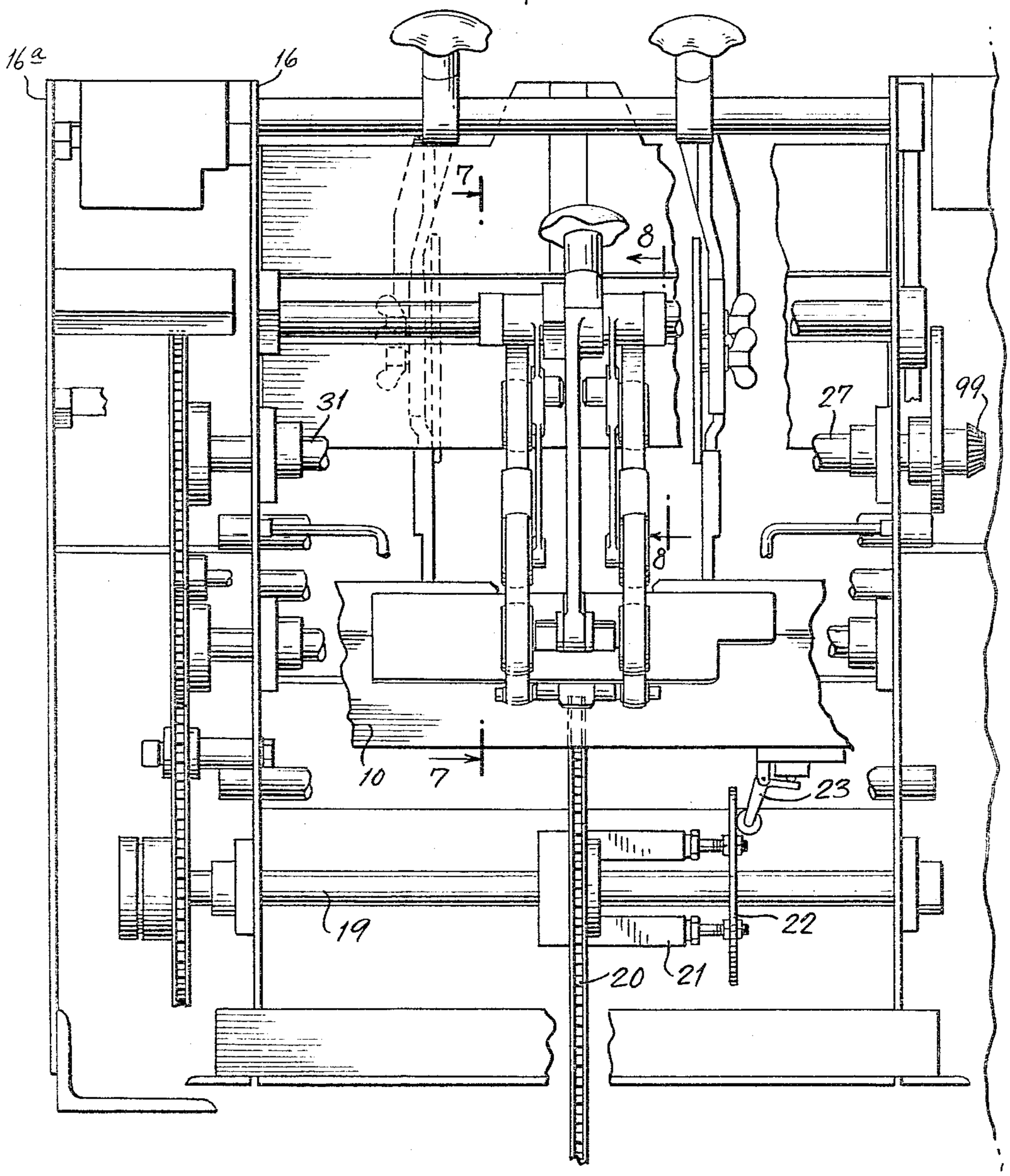

INVENTORS
ERNEST J. SARRING
BY ROBERT A. BRYSON
Kenyon & Kenyon
ATTORNEYS

March 28, 1967 E. J. SARRING ETAL 3,311,368

HIGH SPEED SIGNATURE GATHERING MACHINE

Filed July 10, 1963 12 Sheets-Sheet 6

Fig. 7.

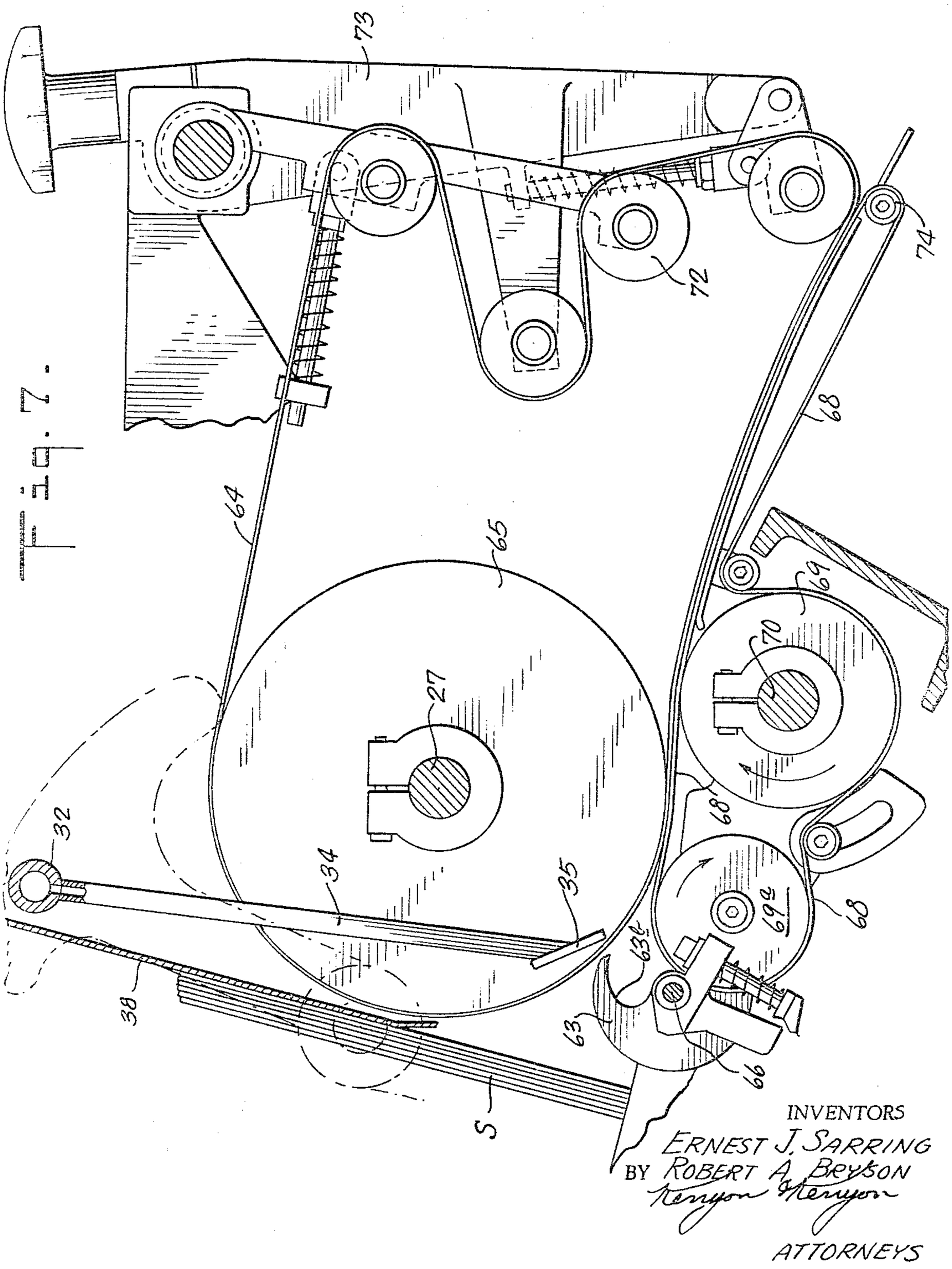

INVENTORS
ERNEST J. SARRING
BY ROBERT A. BRYSON
Kenyon & Kenyon
ATTORNEYS

March 28, 1967 E. J. SARRING ETAL 3,311,368

HIGH SPEED SIGNATURE GATHERING MACHINE

Filed July 10, 1963 12 Sheets-Sheet 7

Fig. 8.

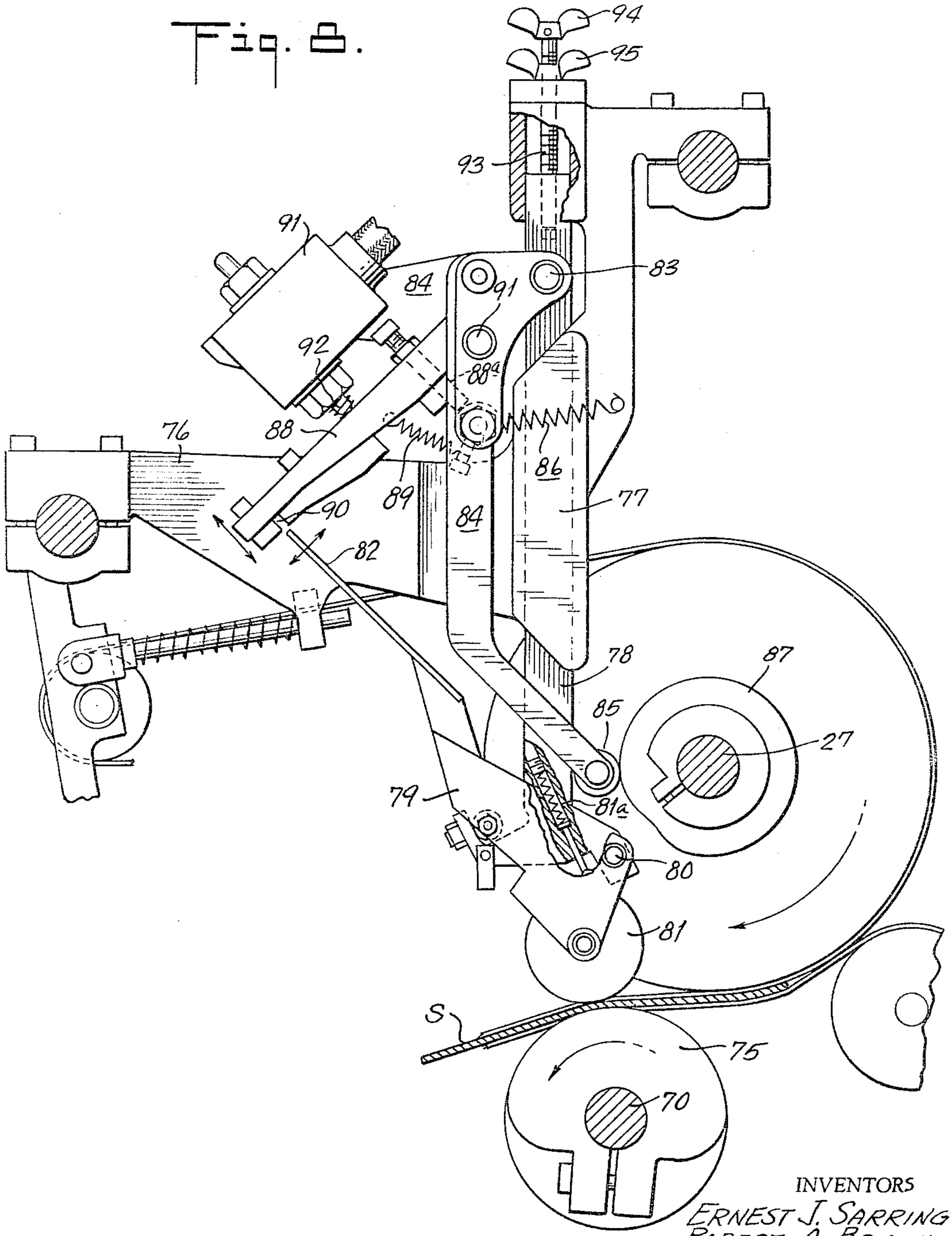

INVENTORS
ERNEST J. SARRING
BY ROBERT A. BRYSON
Kenyon & Kenyon
ATTORNEYS

March 28, 1967 E. J. SARRING ETAL 3,311,368

HIGH SPEED SIGNATURE GATHERING MACHINE

Filed July 10, 1963 12 Sheets-Sheet 8

Fig. 9.

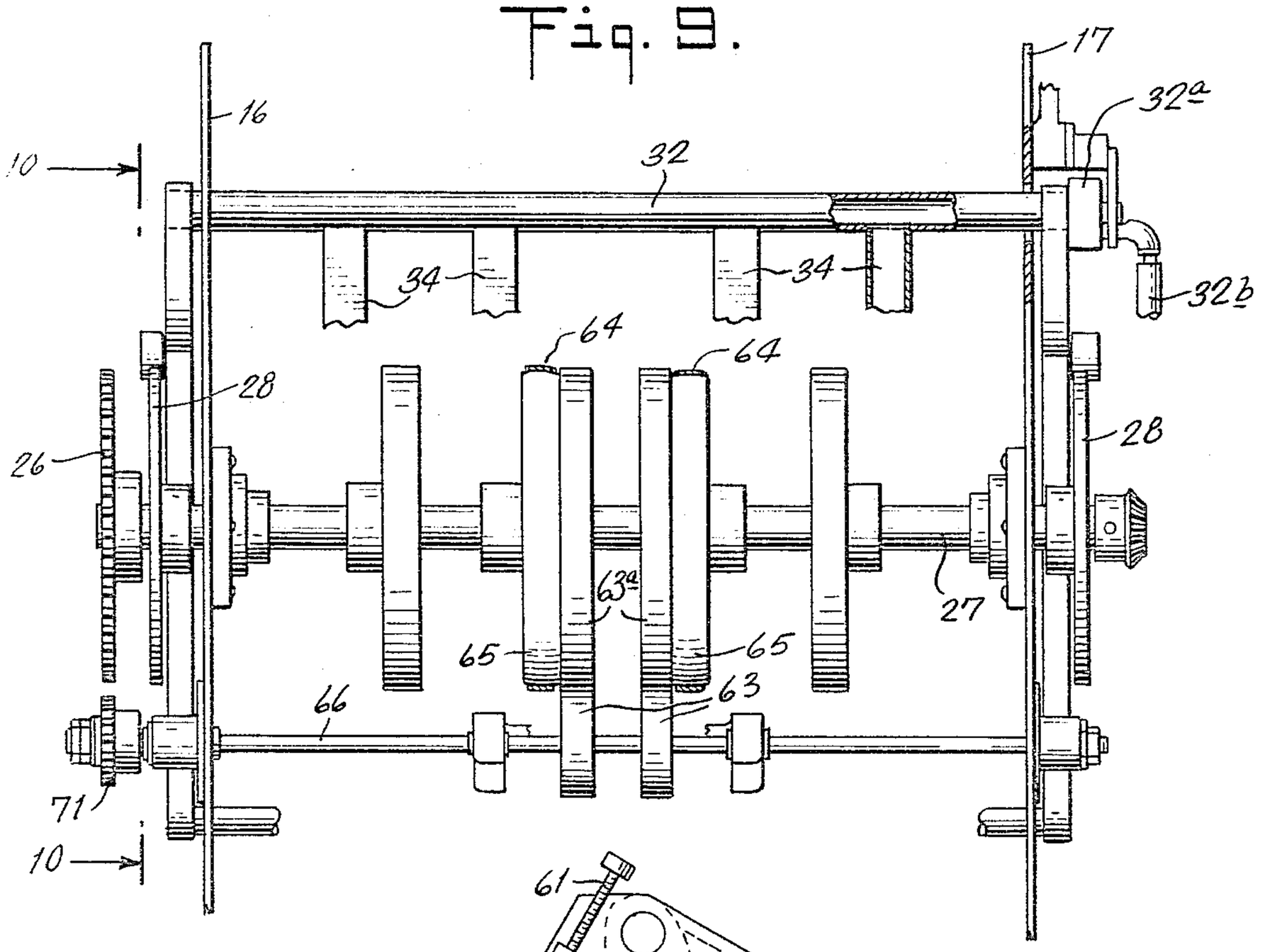

Fig. 10.

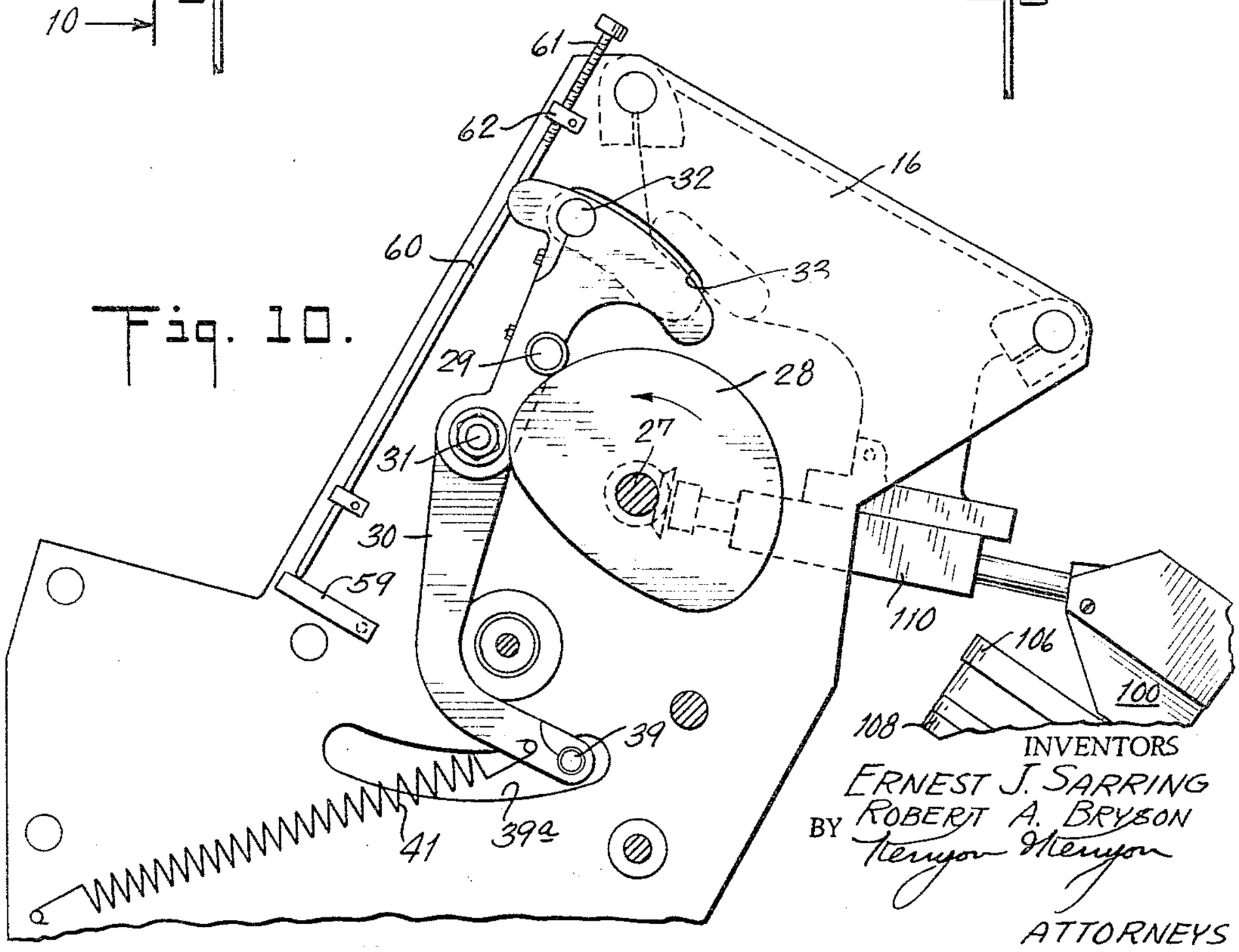

INVENTORS
ERNEST J. SARRING
BY ROBERT A. BRYSON
Kenyon & Kenyon
ATTORNEYS

March 28, 1967 E. J. SARRING ETAL 3,311,368

HIGH SPEED SIGNATURE GATHERING MACHINE

Filed July 10, 1963 12 Sheets-Sheet 9

Fig. 11.

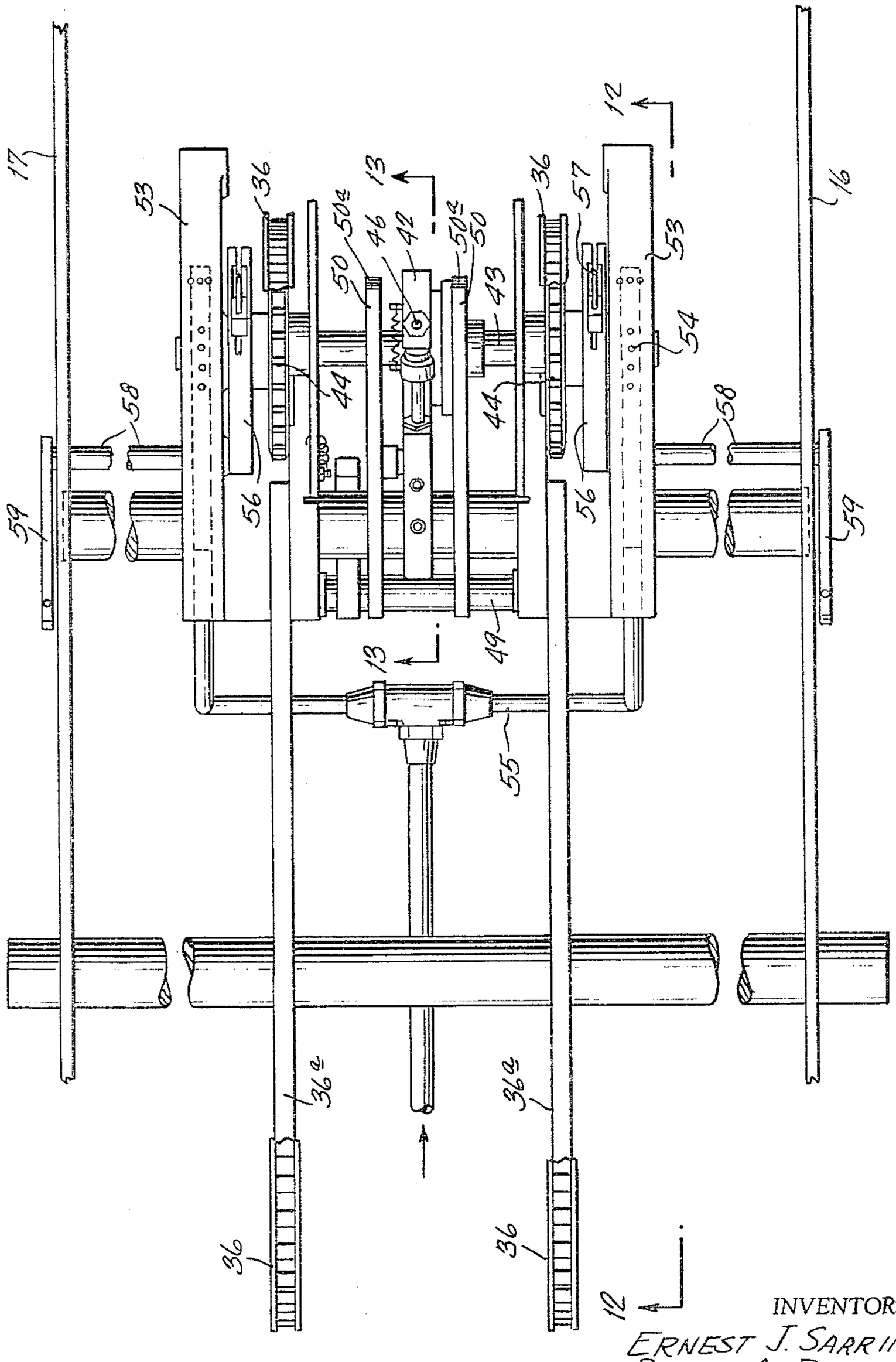

INVENTORS
ERNEST J. SARRING
BY ROBERT A. BRYSON
Terryon & Kenyon
ATTORNEYS

March 28, 1967 E. J. SARRING ETAL 3,311,368

HIGH SPEED SIGNATURE GATHERING MACHINE

Filed July 10, 1963 12 Sheets-Sheet 10

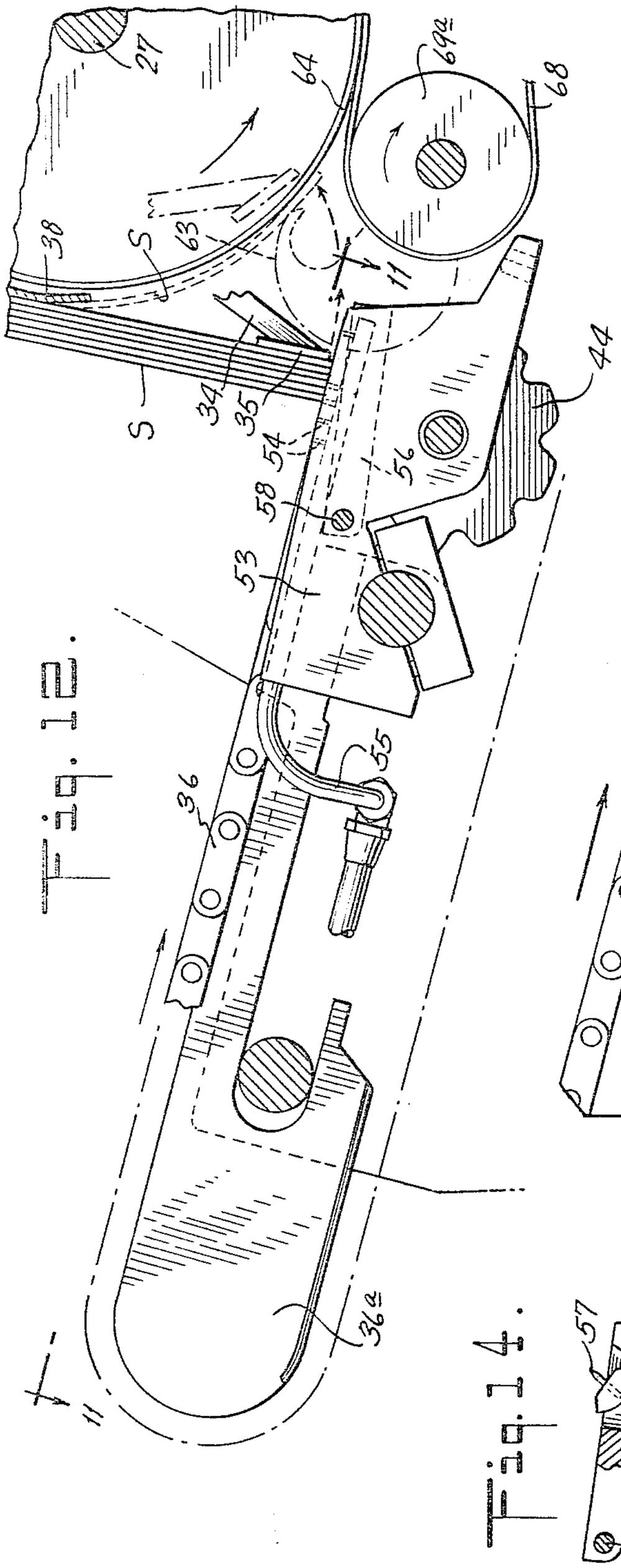

Fig. 12.

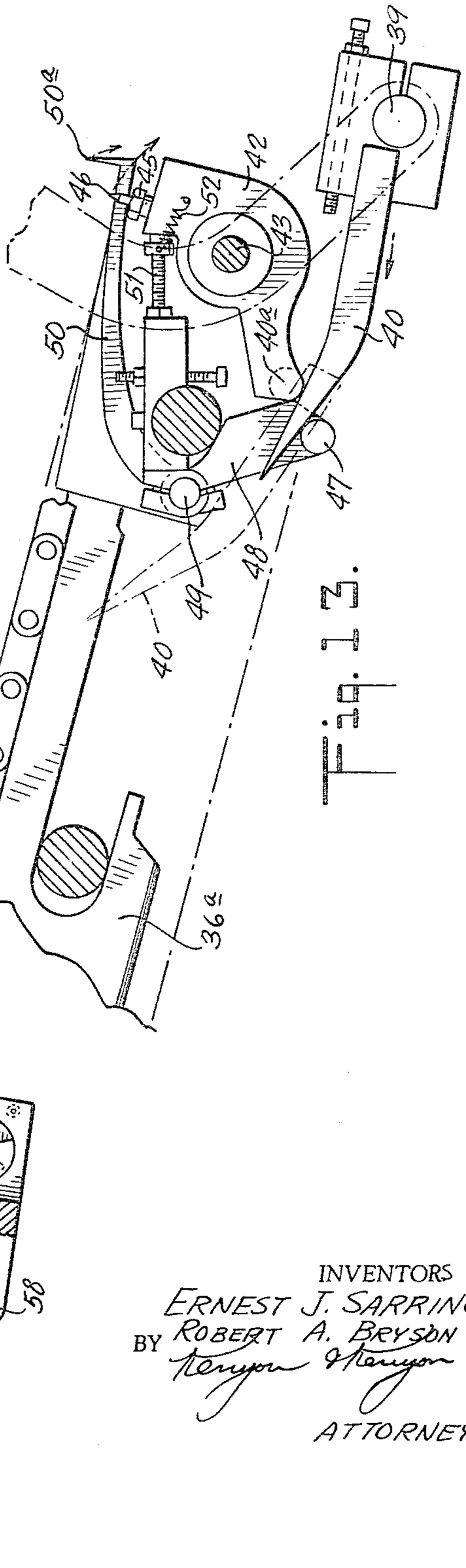

Fig. 13.

Fig. 14.

INVENTORS
ERNEST J. SARRING
BY ROBERT A. BRYSON
Kenyon & Kenyon
ATTORNEYS

March 28, 1967 E. J. SARRING ETAL 3,311,368

HIGH SPEED SIGNATURE GATHERING MACHINE

Filed July 10, 1963 12 Sheets-Sheet 11

Fig. 15.

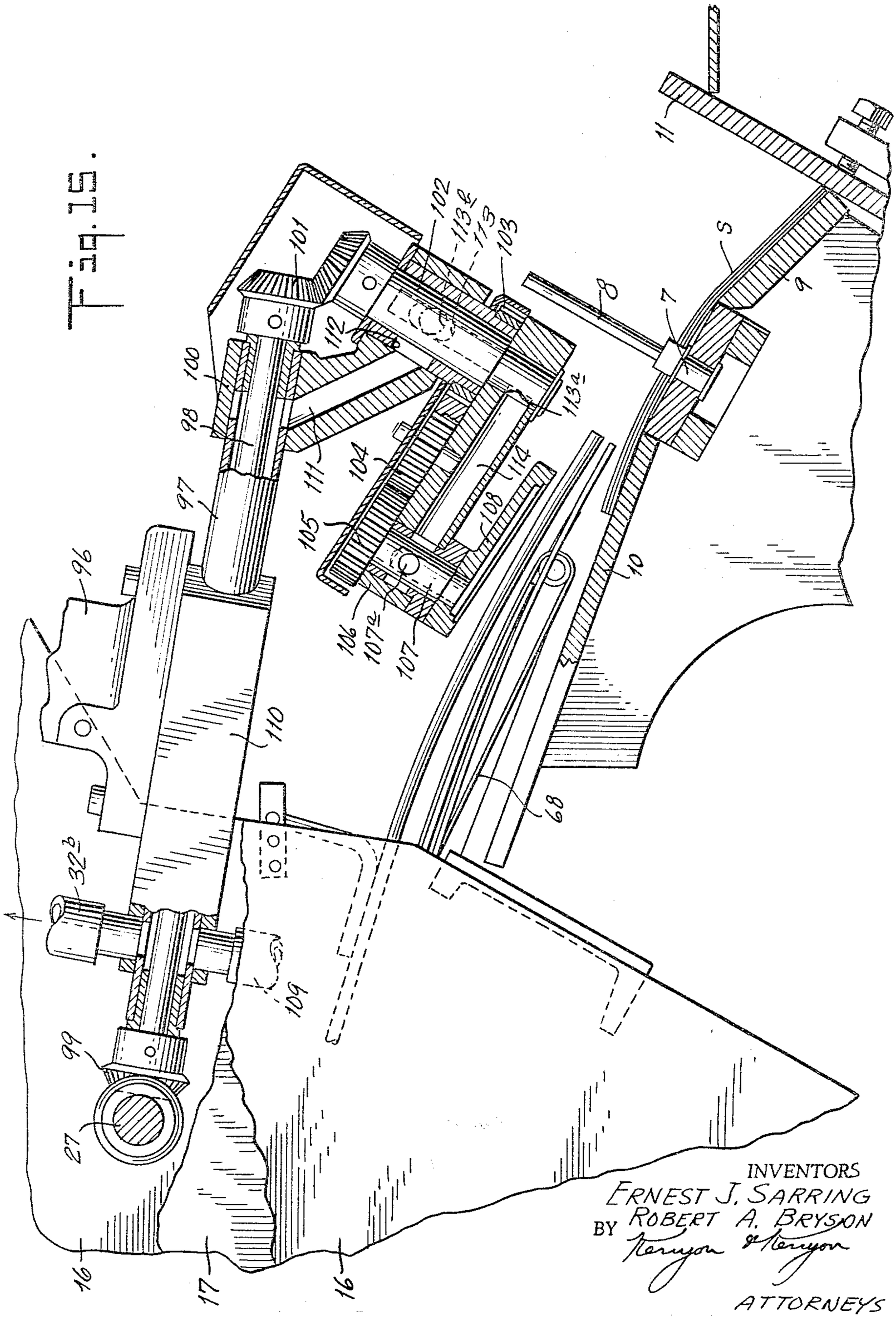

INVENTORS
ERNEST J. SARRING
BY ROBERT A. BRYSON
Kenyon & Kenyon
ATTORNEYS

March 28, 1967 E. J. SARRING ETAL 3,311,368

HIGH SPEED SIGNATURE GATHERING MACHINE

Filed July 10, 1963 12 Sheets-Sheet 12

Fig. 16.

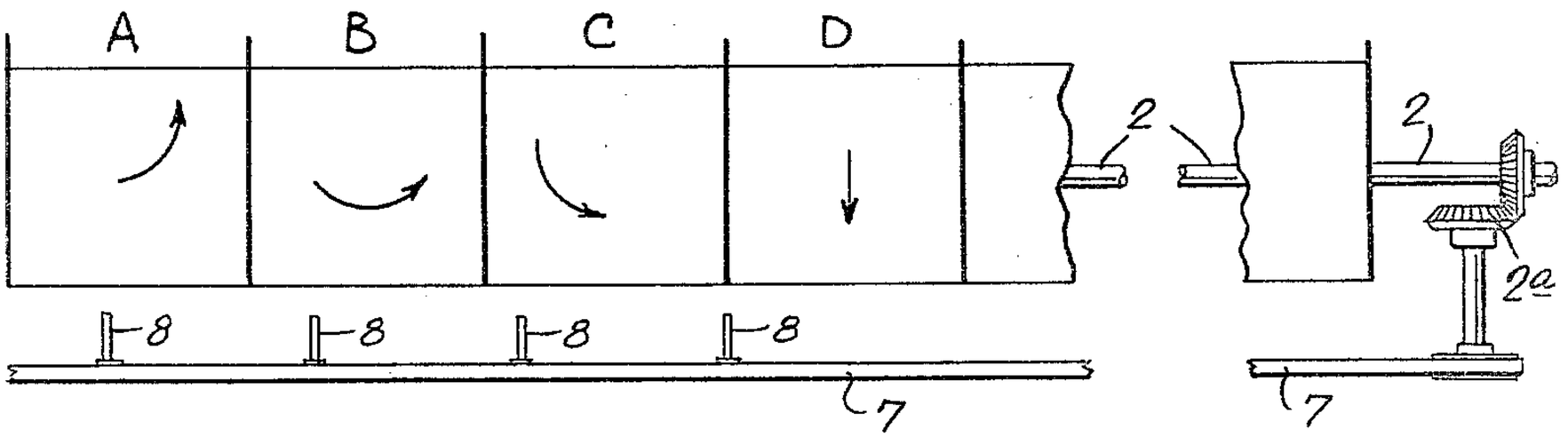

INVENTORS
ERNEST J. SARRING
BY ROBERT A. BRYSON
Kenyon & Kenyon
ATTORNEYS

United States Patent Office

3,311,368

Patented Mar. 28, 1967

3,311,368

HIGH SPEED SIGNATURE GATHERING MACHINE

Ernest J. Sarring and Robert A. Bryson, Easton, Pa., assignors, by mesne assignments, to T. W. & C. B. Sheridan Co., New York, N.Y., a corporation of New York, a subsidiary of Harris-Intertype Corporation, New York, N.Y., a corporation of Delaware

Filed July 10, 1963, Ser. No. 293,987

15 Claims. (Cl. 270—54)

This invention relates to signature gathering machines. Prior to this invention these machines were designed so that all of the hopper assemblies operated in phase with each other. This has the disadvantages that the chain pin spacing is fixed by the spacing between the center lines of the hopper assemblies and that the machine's drive shaft and its powering source are subjected to torque surging. Further, the hopper assemblies have been designed so that the signatures are not positively controlled when fed to the chain pins, an obvious disadvantage. When fed transversely by the reciprocating or rotary gripper types the signatures are left uncontrolled until the pins hit them and accelerate them to the chain speed. When fed tangentially by the overhead rotary gripper type the signatures must in actual practice be thrown ahead of the pins and are uncontrolled until engaged by the pins.

The main objects resulting in the present invention were to provide a gathering machine permitting the chain pin spacing to be in accord with the signature size to provide more gathering capacity for any given chain speed, to avoid the torque surging on the drive shaft and its powering source, and to keep the signatures under positive control at all times during their gathering. Other objects may be inferred from the following disclosure of a specific example of a novel signature gathering machine embodying the principles of this invention.

In the accompanying drawings:

FIG. 1 is a perspective view showing the front of the first end-most hopper assembly, a part of the next hopper assembly, and the chain with its upstanding pins that travels in front of all of the series of hopper assemblies which would extend off to the right;

FIG. 2 is a top view of a new signature transfer device which moves the signatures to the pins of the traveling chain;

FIG. 3 is the same as FIG. 2 but shows the action as the signature is transferred to the pin of the chain;

FIG. 4 is an end elevation of the machine, showing the end hopper assembly seen in FIG. 1, and its supporting base member;

FIG. 5 shows the hopper assembly of FIG. 4 but on an enlarged scale with an end cover plate removed;

FIG. 6 is a front elevation of the hopper assembly with certain of the parts broken away;

FIG. 7 is a cross section on the line 7—7 in FIG. 6;

FIG. 8 is a cross section on the line 8—8 in FIG. 6;

FIG. 9 is a lateral section on an upstanding plane looking into the hopper assembly backwardly or opposite to the signature feeding direction, certain of the parts being eliminated;

FIG. 10 is a cross section taken on the line 10—10 in FIG. 9;

FIG. 11 is a view looking down into the hopper at parts on which the signatures rest and which meter their feed, parts being eliminated;

FIG. 12 is a cross section taken on the line 12—12 in FIG. 11;

FIG. 13 is a cross section taken on the line 13—13 in FIG. 11;

FIG. 14 is a detail shown only by dotted lines in FIG. 12;

FIG. 15 is a section taken on a vertical plane of the signature transfer device which transfers the signatures to the conveyor chain pins; and

FIG. 16 entirely schematically shows in plan view the feeding action of the new machine.

The machine shown by these drawings has a base assembly 1 which jounals the main drive shaft 2 of the machine, this drive shaft running the length of the machine. This base assembly mounts brackets 3 which by loosening screws 4 may be adjusted up and down by means of adjusting screw 5. The base assembly 1 is made of a series of frameworks and such a bracket 3 and its adjusting means is provided for each of these frameworks. Each bracket supports chain track members 6 in which the chain 7 runs having the upstanding pins 8. It also supports the signature supporting slide plates 9 and 10.

The plates 9 and 10 form a trough which transversely declines a little from horizontal and has a front plate 11 for preventing the signatures from sliding forwardly. The signatures slide horizontally on these plates while accumulating. The signatures are fed to in front of each of the pins 8 one after another and with the signatures piling on top of each other so as to collate them as they slide along and produce a book pack. The adjustable brackets 3 are adjusted so the signature trough and the chain 7 declines along the length of the entire machine to keep the top level of the growing piles of signatures at about the same height while the signatures are being collated. The front plate is fastened to the framework 1 and its level remains fixed. Therefore, as the bracket 3 is adjusted downwardly the height of the front plate relative to the level of the trough, increases to accommodate the greater height of signature piles.

At interspaced positions along its length the machine is provided with jam detectors each having a feeler 12 mounted on a bar 13 so as to swing in the event of a jam and actuate a limit switch 14 which lights a lamp 15 while stopping the machine by means of suitable electrical circuitry (not shown).

Extending upwardly from each of the cross frames of the framework of the base assembly 1 is a side frame of each of the hopper assemblies. Each assembly has two of these side frames shown, in FIG. 1 for example, at 16 and 17. These side frame are interconnected by various cross tie bars 18. FIG. 1 shows the two side frames 16 and 17 of one hopper assembly and the left hand side frame 16 of the next succeeding hopper assembly, it being understood that there are a large number of these hopper assemblies extending for the length of the machine.

As for each hopper assembly, there is a hopper assembly drive shaft 19 which extends transversely through them and is journaled to them. This drive shaft is connected by a sprocket wheel and chain drive 20 with the drive shaft 2, this upper part of this drive being shown in FIG. 6, the chain extending downwardly to a sprocket wheel on the shaft 2 in the usual manner. The drive's connection with the shaft 19 is through a clutch assembly 21 which declutches automatically when a predetermined torque maximum is attained. This is to protect the machine in the event of a jam, the clutch assembly having a plate 22 which works a limit switch 23 when declutching occurs to provide an indication in the event of a jam.

On the outside of the side frame 16 the drive shaft 19 has a sprocket wheel 24 keyed to it which through an endless chain 25 drives a sprocket wheel 26 keyed to an upper shaft 27 which is also journaled by the cross frames 16 and 17. As shown by FIGS. 9 and 10, the drive shaft 27 has cams 28 keyed to it on the outsides of the side frames 16 and 17. These cams engage cam

followers 29 on the upper arms of the two-armed levers 30 which swing on stub shafts 31. All of the shafts extend through the two side frames and are journaled to them.

A tube 32 extends through the side frames 16 and 17, the latter having arcuate slots 33 for this purpose, and this tube 32 is mounted transversely on the upper arms of the levers 30 so as to reciprocate swinging laterally. Hollow arms 34 depend from this tube 32 at laterally interspaced locations and are provided on their lower ends with sucker heads 35. The tube 32 is connected with a vacuum source through a valve connection 32*a* which serves to connect the tube 32 with a vacuum tube 32*b* when the sucker heads 35 are at the limit of their backward stroke and to keep this vacuum connected while these heads move forwardly to about a third of the way to the limit of their forward stroke, whereupon the vacuum is terminated, the tube then being connected to the atmosphere or possibly to compressed air.

FIGS. 7 and 12 show that these sucker heads are for the purpose of bending forwardly the lower portion of each front signature S in a stack of signatures arranged with the signatures on edge.

These signatures S are supported on declining chains 36, adjustable side plates 37 holding the stack laterally and a front stop plate 38 engaging the upper portion of the front one of the signatures so as to prevent the stack from moving forwardly as a whole.

As shown by FIG. 10 the lower arms of the levers 30 have a cross bar 39 extending transversely between them and working through arcuate slots 39*a* formed in the two side frames 16 and 17. Tension springs 41 engage the lower ends of the levers and bias their upper ends forwardly so as to keep the cam followers 29 pressed against the cams 28.

Reference to FIG. 13 shows that the cross bar 39 mounts centrally a dagger cam 40 which extends backwardly. When this cam moves from the position shown in solid lines backwardly to the position shown by broken lines it throws a cam follower 40*a* upwardly so as to rotate a feed pawl 42 a few degrees so its upper portion moves forwardly. This feed pawl 42 is in effect an overrunning clutch or ratchet and pawl type of assembly. In engages a shaft 43 which is keyed to front sprocket wheels 44 over which the chains 36 are looped, the chains having back track members 36*a* for their back ends. In this way each time the levers 30 are operated to cause their lower ends to swing backwardly the chains 36 are caused to inch forwardly slightly so as to keep the stack of signatures S tightly pressed against the front stop plate 38.

As shown by FIG. 11 the pawl member 42 is located centrally with respect to the stack of signatures. The top of this feed pawl carries a screw member 45 in which a needle 46 is mounted. This needle extends upwardly and serves to engage the bottom last one of the signatures and by being held thereby against backward motion acts to limit the back stroke of the needle 46 to thereby control the extent of the feed the cam 40 imparts to the chains 36.

When the cam 40 is moved backwardly by the action of the tube 32, the arms 34 then bringing their sucker heads 35 to the lower portion of the front signature of the stack, it also actuates a cam follower 47 which is on the lower end of a two-armed lever 48 which is keyed to a shaft 49. This shaft 49 has arms 50 on which extend forwardly and terminate with upwardly pointed bottom signature stops 50*a*. The stroke of the feed pawl device 42 is determined by the distance it can return after actuation by the cam 40, and this is fixed by the location of the needel 46, and to limit maximum feed there is an adjustable stop 51 against which an abutment on the feed pawl 42 is biased by a tension spring 52.

With the stack of signatures held laterally between the side plates 37 and resting on the chains 36, rotation of the cams 28 causes the arms 34 to swing the sucker heads 35 to the lower part of the front face of the front signature of the stack of signatures resting on the chains 36, the bottom signature stop members 50 to drop while the sucker heads 35 move the signature forwardly and the levers 50 rise to place the stops 50*a* between this signature and the remainder of the stack. With continued rotation of the cams 28 the lower portions of the arms 34 swing forwardly with the sucker heads 35 holding the front signature bottom portion and bending it forwardly so as to project in a forward direction as shown by the dotted lines in FIG. 12. To facilitate separation of the forward signatures with respect to one another, laterally interspaced manifolds 53 extend beneath the signatures, straddling either side of the two chains 36, these manifolds having upwardly pointing holes 54 and being supplied with compressed air through a conduit system 55. Thus, air is blown up between the signatures' bottom edges to aid in their separation.

In addition to the foregoing precautions, located between the manifolds 53 and the chains 36 are forwardly extending levers 56 on which upwardly and forwardly pointing needles 57 are mounted in an angularly adjustable manner. Each lever 56 may be swung up and down by operation of an individual control shaft 58 which is manipulated by having a lever 59 located on its outer end which projects beyond the side frames 16 or 17. These levers are manipulated by push rods 60 which extend upwardly along the side frames and are provided at their upper ends with adjusting screw threads 61 which engage nut members 62 secured to the side frames. These needles 57 are adjusted to project just above the level of the support afforded by the chains 36. Therefore, as each signature is pulled forwardly by the sucker head 35 it is dragged lightly over these needles so as to further assure pulling only one signature at a time. These needles may be adjusted while the machine is operating.

Reference to FIG. 7 shows that as each signature has its bottom portion pulled forwardly by the sucker heads 35 its forward edge is tucked between or in the nip of laterally interspaced pinch rolls 63 and 63*a* which feed to beneath upper belts 64 which are looped around pulleys 65. The lower pinch rolls 63 are made with cut-outs 63*b* to provide clearance as each signature is swung towards them by the sucker heads 35. There are two or more of these pinch rolls and belts as required to obtain a good laterally spread purchase on each of the signatures. The pulleys 65 about which the belts 64 pass are driven by being keyed to the shaft 27 driven by the chain 25. The pinch roll 63 is keyed to a shaft 66 which, as shown by FIG. 5, is provided with a sprocket wheel 67 which is engaged by the outside of the loop of chain 25, thus securing the necessary opposite rotation relative to the shaft 27.

After passing through the nip of the pinch rolls 63 and now beneath the upper belts 64, the advanced signature now feeding forwardly is next engaged by lower belts 68 which are looped around pulleys 69 which are keyed to a shaft 70 which, again as shown by FIG. 5, is keyed to a sprocket wheel 71 which also engages the outside of the loop of chain 25 so as to have opposite rotation relative to the shaft 27. The belts 68 are looped around pulleys 69 and match or register with the belts 64. All of the belts extend forwardly of the machine in the form of forwardly projecting loops of belts, the forwardly traveling spans of the upper and lower belts respectively coinciding so as to carry the signatures on forwardly. The forwardly extending spans of the upper belts are carried by a series of pulleys 72 which are mounted by a carrier 73, some of these various wheels being spring biased to maintain a good belt tension. The lower belts 68 project forwardly by being looped around extension pulleys 74 and have rear pulleys 69*a* which extend them backwardly as required.

It will be remembered that the long drive shaft 2 is intergeared in the prior art manner with respect to the chain 7 which moves the pins 8. Through the gearing and belts previously mentioned the action of the arms 34 and sucker heads 35 are such as to, by timing, pull and start forward one signature each time one of the pins 8 approaches the hopper assembly involved. Furthermore, the forward advancing speed of the belts 64 and 68 are timed, by the various gearing elements, so as to advance each signature at approximately the same speed as the pins are traveling past the various assemblies. It should be kept in mind that in each instance one signature must be started forwardly by the mechanisms described as one of the pins 8 advances towards that particular hopper assembly.

As each signature is carried forwardly by the belts 64 and 68 it passes over a cam 75 which is mounted on the shaft 70, this cam being timed to rise and press upwardly each signature as it passes over it. A signature caliper is mounted above this cam 75 as described below.

This caliper is in the form of an assembly which is mounted by a bracket 76 the location of which can be seen generally in FIG. 1 as being on the center line of the hopper assembly. This assembly includes a vertical slideway 77 in which a rod 78 can reciprocate for calipering adjustment. On the lower end of this rod a two-armed lever 79 is pivoted by a bearing 80. The lower end of this two-armed lever supports a caliper wheel 81 which is biased by a spring 81*a* towards the cam 75, so it calipers the signatures passing between it and the cam 75 when the latter is in operative position. If only one signature is being passed the wheel 81 is raised a predetermined amount so as to swing the other arm 82 of the two-armed lever 79, this arm being very long so as to have a motion-multiplying effect relative to the wheel 81.

The rod 78 also has pivoted to it at 83 a bell crank 84 having a long depending arm provided with a cam follower 85 which is biased by a spring 86 against a cam 87 keyed to the shaft 27. The timing is such that as a signature is between the cam 75 and the caliper roller 81 a depression in the cam 87 permits the follower 85 to move briefly to the right as the caliper assembly is shown by FIG. 8.

A lever 88 is pivoted to the bell crank 84 and has an abutment 88*a* bearing on the latter with a spring 89 biasing the lever towards abutment with the bell crank. Therefore, as the follower 85 moves to the right the bell crank 84 swings counter-clockwise, as seen in FIG. 8, allowing the spring-biased lever 88 to move towards the end of the arm 82.

The lever 88 has a recess 90 which receives the end of the lever 82 only when the latter is deflected due to a single signature passing between the roller 81 and the cam 75. When there is either no signature or there are two or more signatures the recess 90 can not receive the end of the lever 82 and the latter therefore abuts the lever 88 and holds it against further movement with the bell crank 84. The latter has a short laterally extending arm on which a limit switch 91 is mounted with its actuator engaging the lever 88, and when the latter is held by abutting the lever 82 the switch continues to move so the lever 88 presses the actuator 92 to provide a signal which may be used to stop the entire machine. FIG. 1 shows a signal lamp 93 which would ordinarily be actuated by this signal also. When the cam 87 turns around a bit more it returns the follower 85 and this raises the lever 88 and clears the caliper for the next signature.

It can be seen that the entire caliper assembly is accurate and relatively foolproof. To adjust the setting of the caliper wheel 81 the bar 78 may be adjusted vertically by means of a screw 93 threaded into its upper end and having a handle wing 94 and provided with a jam nut 95.

As each signature is fed forwardly between the belts 64 and 68 it must be transferred to the pins 8. Reference to FIGS. 1, 2, 3 and 15 show how this is done.

As shown by FIG. 15 bracket 96 mounts a forwardly extending shaft assembly comprising a housing of tubular shape 97 within which a rotative drive shaft 98 is journaled, the rear end of this shaft 98 having angle gearing 99 connecting it with the drive shaft 27 where it projects beyond the side frame 17. The forward end of this tubular housing 97 mounts a gear bracket 100 in which angle gearing 101 is journaled, this connecting the shaft 98 with a relatively short downwardly extending shaft 102.

The bracket 100 also mounts around the lower end of the shaft 102 a stationary sun gear 103 which is geared to a planet gear 104 which is in turn meshed with a second planet gear 105, all of these being journaled by an arm assembly 106 extending radially from and being keyed to the shaft 102. The gear 105 is keyed to a depending short stub shaft 107 which carries on its lower end a sucker head 108. This planetary gearing system is such that as the arm assembly 106 rotates in one direction, which is in the direction the pins 8 are traveling, the sucker head 108 revolves in the opposite direction so that its orientation angularly never changes although it revolves about the center of the shaft 102.

A suction hose 109 is connected to a manifold 110 connecting with the tubular member 97, the inside diameter of the latter being enough larger than the shaft 98 to form a vacuum duct running down to the bracket 100, where this duct communicates with a branch duct 111 opening to a port 112. This manifold also connects with the tube 32*b*. The shaft 102 is tubular in part and has a port 113 that registers with the port 112 to provide a rotary valve action, registration of the two ports causing the vacuum to be connected through the tubular shaft 102 and through a port 113*a* with a side branch 114 formed in the arm assembly 106 and through a tubular part of the stub shaft 107 and a port 107*a* with the sucker head 108. The port 113 has another registering port 113*b* formed in the bracket 100 supplied with compressed air by way of a hose 115 shown in FIGS. 1 to 3.

As shown somewhat schematically by FIG. 2, a signature fed forwardly as described before is sucked up by the sucker head 108, the timing of the vacuum valve arrangement relative to the rotation of the arm 106 being timed suitably for this purpose. The peripheral speed of the arm assembly 106 is such as to match peripherally the linear traveling speed of the belts 64 and 68. As shown by FIGS. 2 and 3 the angular orientation of the signature does not change from the position it had when fed by the two belts, it being merely moved forwardly in a curving manner and tangentially deposited in front of the appropriate advancing pin 8 with which that particular hopper assembly is timed. Just as the signature is registered with that pin 8 the vacuum connection established between the port 112 and the port 113 is terminated and the port 113 of the shaft 102 registers with the air port which is connected with the compressed air tube 115.

It is to be understood that when a signature is pulled from the stack in the hopper it is thrust into the pinch rolls and then between the belts previously described so as to be almost immediately accelerated to approximately the traveling speed of the pins 8 but at right angles to their travel, this signature then feeding forwardly as the sucker head 108 turns into registration with this signature. The suction then is drawn and the signature is moved forwardly in a curving manner and arcuately turned, the speed being peripherally the same as the speed of the belts 64 and 68, and is deposited in actual engagement with the pin 8 or almost so and with the signature having substantially the same speed as the pin and moving in the pin's traveling direction.

Never for a moment is the signature left uncontrolled from the moment it is pulled from the stack of signatures

until it is moving in the trough in the pin's traveling direction and very close to the pin's speed. The signature never is left in a spaced position in front of the pin 8 but is moved positively into engagement with the pin 8 by the sucker head 108 in each instance until the signature and pin are in actual contact after which the sucker head 108 lets loose of the signature, but not until then.

To achieve the above result it is necessary that there be exact timing between the hopper assembly parts and each pin 8 drawn along by the chain 7. This is ordinarily impossible to maintain because the chain 7 wears so that the spacing between the pins 8 may increase and the various mechanisms of the hopper assembly may be subject to wear. Also, manufacturing precision has limits preventing a predetermination of exact simultaneous signature feeding. Prior art machines have dropped the signatures in front of the pins from heights requiring considerable time for them to settle in the trough and this has necessitated that the signatures be placed well in advance of each of the pins of the conveyor chain, this in turn necessitating that these chain pins be spaced much farther apart than is necessary to accommodate the length of the signatures and therefore necessitating much wider spacing as to each of the stations where the signatures are fed to the chains.

In the present machine each signature is turned while flat and in about the same plane as the trough and at a level above the trough just sufficient for safe clearance, into the trough in front of the pin which pushes this signature along. Therefore, practically no time is lost while the signature settles in the trough and the pins need not be excessively interspaced solely to give time for signature settling.

In the present machine the main drive shaft 2 has a clutch 116 for each of its hopper assemblies. This clutch is in each instance operated by levers 117 under the control of the operator of the machine. Each clutch 116 is capable of being engaged throughout an infinite number of angular positions relative to the shaft 2 and each clutch 116 is interposed between the lower sprocket which drives the chain 20 which in turn drives the shaft 19 which controls the entire hopper assembly in each instance.

With the above arrangement it is possible to time each and every one of the hopper assemblies so that its sucker head 108 can be made to deposit each signature exactly into direct contact with each of the pins 8 passing by. It is unnecessary that all of the hopper assemblies operate simultaneously together and this action would ordinarily not be obtained. Therefore, high torque surges on the machine's main drive shaft are avoided because the various hopper assemblies are dephased relative to each other under practical operating circumstances.

Various elements shown have not been described in all instances since it is unnecessary for the purpose of disclosing the principles of operation of the present invention. For example, the left-hand or first hopper assembly is provided with an end plate 16*a* which covers the sprockets and gearing at that end. Various signature guides are used. In FIG. 1 the control switch box for the machine is shown at 116*a* there being a number of these boxes along the machine's length so as to provide control when one or the other of the lights 93 is actuated and the trouble thus indicated has been corrected.

FIG. 1 also shows an indicator 117*a* which provides an indication of the actual production rate of the machine. Due to the features described hereinabove this machine can attain rates of up to 200 books per minute or more.

This high speed operation is possible because each hopper assembly can be timed exactly with respect to the pins 8. It is unnecessary to space these pins widely apart just to permit the deposit of each signature well in advance of each pin. At that same time the positive engagement of each pin 8 by the signature which has been

under constant control since it left the stack of signatures, permits the much higher speed because there can be no bouncing or dearranging of the signatures deposited in front of the pins.

Note that each signature is fed by the belts 64 and 68 forwardly at right angles to the traveling direction of the pins 8. The sucker head 108 picks up the signature, the sucker being positioned by means of its supporting parts so that when it picks up the signatures it is moving tangentially with respect to the traveling direction imparted to the signature by the belts 64 and 68. The sucker is moving at substantially the same speed as the signatures and therefore as the suction goes on it picks the signature up in each instance without jerks or trouble. The picked up signature is then carried forwardly in an arc moving at the same peripheral speed as it had linearly when leaving the belts 68 and 64. Each signature is then moved to actual contact with each pin 8, the curving motion permitting this to be done since the back edge of the signature is being brought forwardly so as to accommodate the linear movement of the pin 8. Just when the signature is moving tangentially with respect to the travel of the pin 8 the suction lets go and the compressed air is turned on thus blowing the signature positively off and downwardly in phase with the pin's travel. The compressed air continues to flow as the signature starts its travel on the trough, so due to the swing of the head the air flow follows the signature.

To prevent the signatures from dropping excessively, it is to be noted that, as shown by FIG. 4, the bracket assembly 3 may in each instance be adjusted up and down so that the trough and the chain may be made to gradually decline throughout the length of the entire gathering machine. That is to say the chain and the trough may be made to gradually decline in proportion to the accumulated signatures. Therefore, at no station is it necessary for the sucker head 108 to let loose of the signature and permit the other signature to drop vertically any substantial distance. It is to be understood that all of the hopper assemblies feed the signatures at substantially the same level.

Each hopper assembly is entirely independent of the others in every way. Each is a self-contained unit removably fastened to the base framework by screw fastenings indicated at 16*b* in FIG. 5, for example. Therefore any one may be removed and replaced by another. This may be for maintenance, permitting spares to be used when necessary. It may also be to permit replacement by a hopper assembly designed to handle novelty or trick inserts as demanded by advertising today in some instances.

Reference to schematic FIG. 16, a group of the signature hopper assemblies A to D are reprsented, as well as the chain 7 and pins 8 and, incidentally, a representation of a mechanical drive 2*a* between the chain and the drive shaft 2 of the machine. The series of hopper assemblies is very long in the actual machine.

Now note that the spacing between the pins is shown as being substantially less than the spacing between the centers of the hopper assemblies. Further, note that assembly A has fed its signature, B is just placing its signature in contact with its pin, C is behind B in its cycle, and D is just sucking up its signature from the feeding belts. All four machines are dephased relative to each other. Throughout the complete series of the machine's hopper assemblies some may be in phase and many are dephased, the timing being as required by the pin spacing only.

What is claimed is:

1. A signature gathering machine including a series of first means for feeding signatures automatically and continuously one after another, a series of interspaced constantly traveling second means extending along the series of first means for engaging the signatures fed thereby with each second means moving from each of

the first means to the next of the first means to accumulate signatures, said second means being interspaced a predetermined distance, and means for mechanically intergearing the two series over a range of infinitely differing angular relations so that the first means are timed to feed the signatures to the second means when the latter are interspaced a predetermined distance and including for each of the first means a clutch for disengaging and re-engaging each first means with respect to its intergearing with the second means series, so that each first means may be retimed individually to feed signatures for substantially immediate engagement thereof by each second means regardless of the latter's exact interspacing.

2. A signature gathering machine including a series of first means for feeding signatures automatically and continuously one after another, a series of interspaced constantly traveling second means extending along the series of first means for engaging the signatures fed thereby with each second means moving from each of the first means to the next of the first means to accumulate signatures, said second means being interspaced a predetermined distance, and means for mechanically intergearing the two series over a range of infinitely differing angular relations so that the first means are timed to feed the signatures to the second means when the latter are interspaced a predetermined distance and including for each of the first means a clutch for disengaging and re-engaging each first means with respect to its intergearing with the second means series, so that each first means may be retimed individually to feed signatures for substantially immediate engagement thereof by each second means regardless of the latter's exact interspacing; each first means having means for engaging each signature fed thereby continuously while moving it in a plane approximately the same and through an arc tangent to the travel of the second means series and releasing each signature when engaged by each second means.

3. A signature gathering machine including a series of first means for feeding signatures automatically and continuously one after another, a series or interspaced constantly traveling second means extending along the series of first means for engaging the signatures fed thereby with each second means moving from each of the first means to the next to accumulate signatures, and means for mechanically intergearing the two series and including for each of the first means a clutch for disengaging and re-engaging each first means with respect to its intergearing with the second means series, whereby each first means may be timed individually to feed signatures for engagement thereof by each second means; said series being substantially linear and positioned substantially horizontally and the second means comprising abutments for pushing the signatures, said machine including an endless chain on which the abutments are mounted and having a trough extending along the first means series and into which the abutments project for slidingly supporting the signatures as they accumulate, and means for mounting the trough and chain so that they decline in the traveling direction of the chain so that the upper level of the accumulating signatures remains substantially the same, the first means all feeding substantially at the same level.

4. A signature gathering machine including a series of first means for feeding signatures automatically and continuously one after another, a series of interspaced constantly traveling second means extending along the series of first means for engaging the signatures fed thereby with each second means moving from each of the first means to the next to accumulate signatures, and means for mechanically intergearing the two series and including for each of the first means a clutch for disengaging and re-engaging each first means with respect to its intergearing with the second means series,

whereby each first means may be timed individually to feed signatures for engagement thereof by each second means; each first means having means for engaging each signature fed thereby continuously while moving it in a plane approximately the same and through an arc tangent to the travel of the second means series and releasing each signature when engaged by each second means; said series being substantially linear and positioned substantially horizontally and the second means comprising abutments for pushing the signatures, said machine including an endless chain on which the abutments are mounted and having a trough extending along the first means series and into which the abutments project for slidingly supporting the signatures as they accumulate, and means for mounting the trough and chain so that they decline in the traveling direction of the chain so that the upper level of the accumulating signatures remains substantially the same, the first means all feeding substantially at the same level, whereby the signatures are positively engaged continuously to hold them against individually uncontrolled motion while being gathered.

5. A signature gathering machine including a series of first means for feeding signatures automatically and continuously one after another, a series of interspaced constantly traveling second means extending along the series of first means for engaging the signatures fed thereby with each second means moving from each of the first means to the next to accumulate signatures, and means for mechanically intergearing the two series and including for each of the first means a clutch for disengaging and re-engaging each first means with respect to its intergearing with the second means series, whereby each first means may be timed individually to feed signatures for engagement thereof by each second means; each first means having means for engaging each signature fed thereby continuously while moving it in a plane approximately the same and through an arc tangent to the travel of the second means series and releasing each signature when engaged by each second means; said series being substantially linear and positioned substantially horizontally and the second means comprising abutments for pushing the signatures, said machine including an endless chain on which the abutments are mounted and having a trough extending along the first means series and into which the abutments project for slidingly supporting the signatures as they accumulate, and means for mounting the trough and chain so that they decline in the traveling direction of the chain so that the upper level of the accumulating signatures remain substantially the same, the first means all feeding substantially at the same level; whereby the signatures are positively engaged continuously to hold them against individually uncontrolled motion while being gathered; the first means each including means for holding a stack of signatures and means for separating individual signatures therefrom and while continuously engaging each separated signature transferring it to the signature engaging means moving it through the arc aforesaid.

6. A signature gathering machine hopper assembly including a signature transfer device for transferring approximately horizontal signatures to the continuous horizontally traveling interspaced signature abutments of a signature gathering machine's signature accumulating conveyor having a trough for supporting the conveyed signatures, said assembly including a crank arm rotative in a plane substantially the same as said trough, a sucker head mounted on the swinging end of the arm to revolve in said plane, means for rotating the head in a reverse direction relative to the rotation of the arm so that the head's angular orientation remains constant while the arm rotates, means for rotating the arm in said direction at a peripheral speed at least approximating said abutment's speed, the arm and head being

located so the head swings over a signature to be transferred and through the path of said abutments tangentially with respect to their said directions, and means for applying suction to the head as it swings over the signature to pick up the latter and for terminating the suction as the head swings through said path to transfer the signature to said conveyor.

7. A signature gathering machine hopper assembly including a signature transfer device for transferring approximately horizontal signatures to the continuous horizontally traveling interspaced signature abutments of a signature gathering machine's signature accumulating conveyor having a trough for supporting the conveyed signatures, said assembly including a crank arm rotative in a plane substantially the same as said trough, a sucker head mounted on the swinging end of the arm to revolve in said plane, means for rotating the head in a reverse direction relative to the rotation of the arm so that the head's angular orientation remains constant while the arm rotates, means for rotating the arm in said direction at a peripheral speed at least approximating said abutment's speed, the arm and head being located so the head swings over a signature to be transferred and through the path of said abutments tangentially with respect to their said direction, and means for applying suction to the head as it swings over the signature to pick up the latter and for terminating the suction as the head swings through said path to transfer the signature to said conveyor; said arm rotating means including means for adjustably varying the angular location of the arm relative to said traveling abutments so the head can place the signature in positive contact with an abutment prior to termination of the suction.

8. A signature gathering machine hopper assembly including a signature transfer device for transferring approximately horizontal signatures to the continuous horizontally traveling interspaced signature abutments of a signature gathering machine's signature accumulating conveyor having a trough for supporting the conveyed signatures, said assembly including a crank arm rotative in a plane substantially the same as said trough, a sucker head mounted on the swinging end of the arm to revolve in said plane, means for rotating the head in a reverse direction relative to the rotation of the arm so that the head's angular orientation remains constant while the arm rotates, means for rotating the arm in said direction at a peripheral speed approximating said abutment's speed, the arm and head being located so the head swings over a signature to be transferred and through the path of said abutments tangentially with respect to their said direction, and means for applying suction to the head as it swings over the signature to pick up the latter and for terminating the suction as the head swings through said path to transfer the signature to said conveyor; said assembly including means for feeding signatures successive to the sucker head timed to the rotation of the crank arm and in a plane substantially the same as that in which the arm rotates and at a traveling speed substantially the same as the arm's peripheral speed with the signatures feeding substantially at a right angle with respect to said abutment's travel and tangentially with respect to the head's travel on the end of the arm, whereby the signatures during transfer travel in a curve to said abutments without change in their orientation.

9. A signature gathering machine hopper assembly including a signature transfer device for transferring approximately horizontal signatures to the continuous horizontally traveling interspaced signature abutments of a signature gathering machine's signature accumulating conveyor having a trough for supporting the conveyed signatures, said assembly including a crank arm rotative in a plane substantially the same as said trough, a sucker head mounted on the swinging end of the arm to revolve in said plane, means for rotating the head in a reverse direction relative to the rotation of the arm so that the head's angular orientation remains constant while the arm rotates, means for rotating the arm in said direction at a peripheral speed approximating said abutment's speed, the arm and head being located so the head swings over a signature to be transferred and through the path of said abutments tangentially with respect to their said direction, and means for applying suction to the head as it swings over the signature to pick up the latter and for terminating the suction as the head swings through said path to transfer the signature to said conveyor; said assembly including means for feeding signatures successive to the sucker head timed to the rottaion of the crank arm and in a plane substantially the same as that in which the arm rotates and at a traveling speed substantially the same as the arm's peripheral speed with the signatures feeding substantially at a right angle with respect to said abutment's travel and tangentially with respect to the head's travel on the end of the arm, whereby the signatures during transfer travel in a curve to said abutments without change in their orientation; said arm rotating means including means for adjustably varying the angular location of the arm relative to said traveling abutments so the head can place the signature in positive contact with an abutment prior to termination of the suction.

10. A signature gathering machine including a forward declining support for a stack of signatures each positioned on edge, means engaging the front signature for preventing the stack from moving forwardly while leaving the lower portion of the signature free, a retractable means for engaging and holding said portion, at least one sucker head and means for mounting this head so it reciprocatively moves between a back position, causing the head to engage with said lower portion and a forward position bending this portion forwardly, means for engaging said bent lower portion and pulling the front signature from said stack and moving it forwardly in a generally horizontal plane, a conveyor having interspaced signature engaging abutments traveling horizontally transversely in front the signature engaging and forwardly moving means, and signature transfer means for engaging the forwardly fed signature and while maintaining its angular orientation in its generally horizontal plane swinging the signature in this plane arcuately into engagement with the approaching abutment.

11. The machine of claim 10 in which said support includes at least one chain feeding conveyor span and means for intermittently moving this span forwardly in response to the location of the foremost singature.

12. The machine of claim 10 and including means for blowing air upwardly into the bottom edges of said stack at least along its forward portion.

13. The machine of claim 10 and including at least one forwardly inclined upwardly pointing fixed needle located to project above the bottom level of said stack adjacently ahead of the front signature to aid in pulling single signatures.

14. The machine of claim 10 and including rotative means for supporting one face of the signature while moving forwardly to said signature transfer means and a roller bearing on the other face, a lever on which the roller is mounted for deflection by the signature and including a relatively long arm projecting for amplified deflection, a reciprocative feeler having a recess for receiving the end of the long arm, when the latter is deflected by the presences of a single signature, the feeler otherwise abutting the end of the arm, means for reciprocating the feeler towards the end of the arm each time a signature should pass the roller, and means for obtaining a signal responsive to the feeler being held from reciprocating because the arm's end fails to be received by the feeler's recess.

15. A signature gathering machine hopper assembly including a signature transfer device for transferring ap-

proximately horizontal signatures to the continuous horizontally traveling interspaced signature abutments of a signature gathering machine's signature accumulating conveyor having a trough for supporting the conveyed signatures, said assembly including a crank arm rotative in a plane substantially the same as said trough, a sucker head mounted on the swinging end of the arm to revolve in said plane, means for rotating the head in a reverse direction relative to the rotation of the arm so that the head's angular orientation remains constant while the arm rotates, means for rotating the arm in said direction at a peripheral speed at least approximating said abutment's speed, the arm and head being located so the head swings over a signature to be transferred and through the path of said abutments tangentially with respect to their said directions, and means for applying suction to the head as it swings over the signature to pick up the latter and for

terminating the suction as the head swings through said path to transfer the signature to said conveyor, and means for blowing air downwardly from asid head after said transfer, to hold the signature on said conveyor.

References Cited by the Examiner

UNITED STATES PATENTS

591,801	10/1897	Agnew	270—54
1,041,806	10/1912	King	270—46
1,441,278	1/1923	Halvorsen	270—55
2,770,456	11/1956	Magarinos et al.	270—58
3,071,369	1/1963	Ambrogi	270—55

EUGENE R. CAPOZIO, *Primary Examiner.*

P. WILLIAMS, *Assistant Examiner.*