Dec. 6, 1966 A. R. DAVIS 3,290,555

SILICON CONTROLLED RECTIFIER DIMMER

Filed June 9, 1964

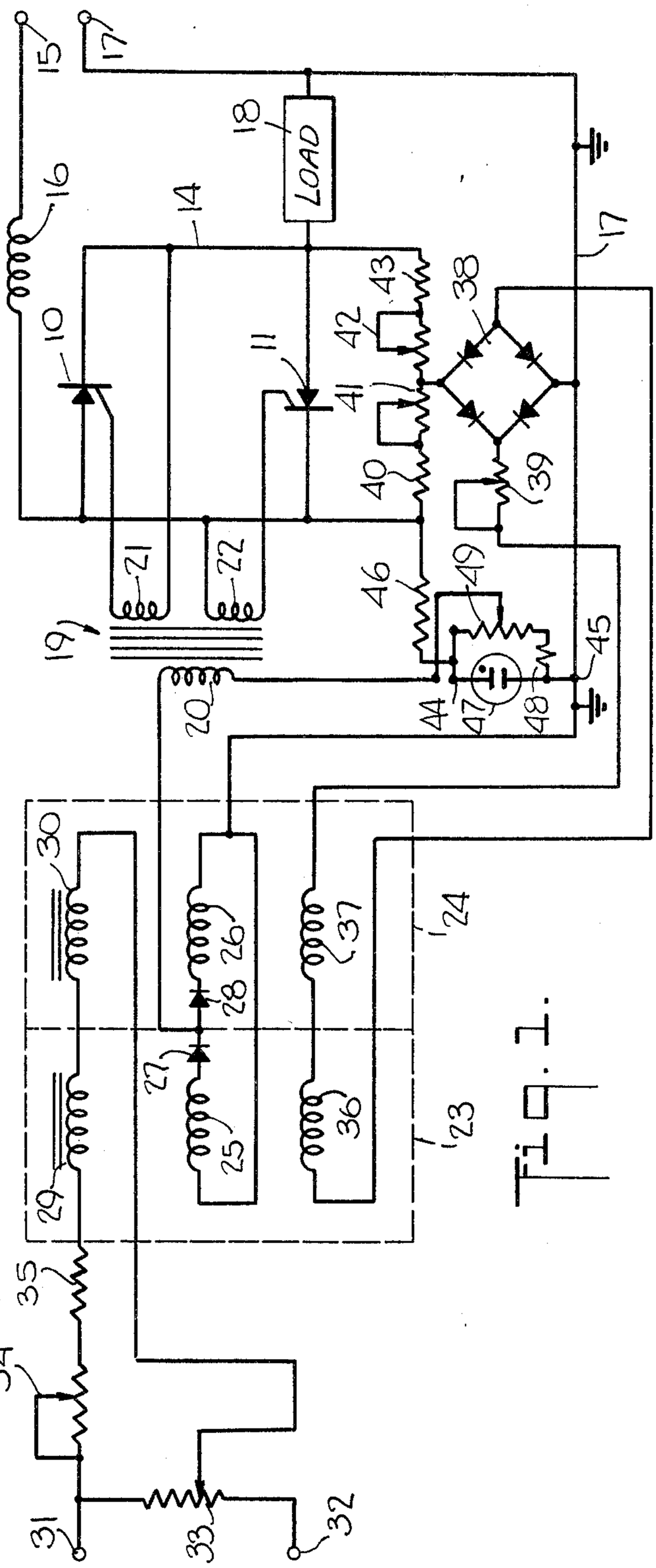

Fig. 1.

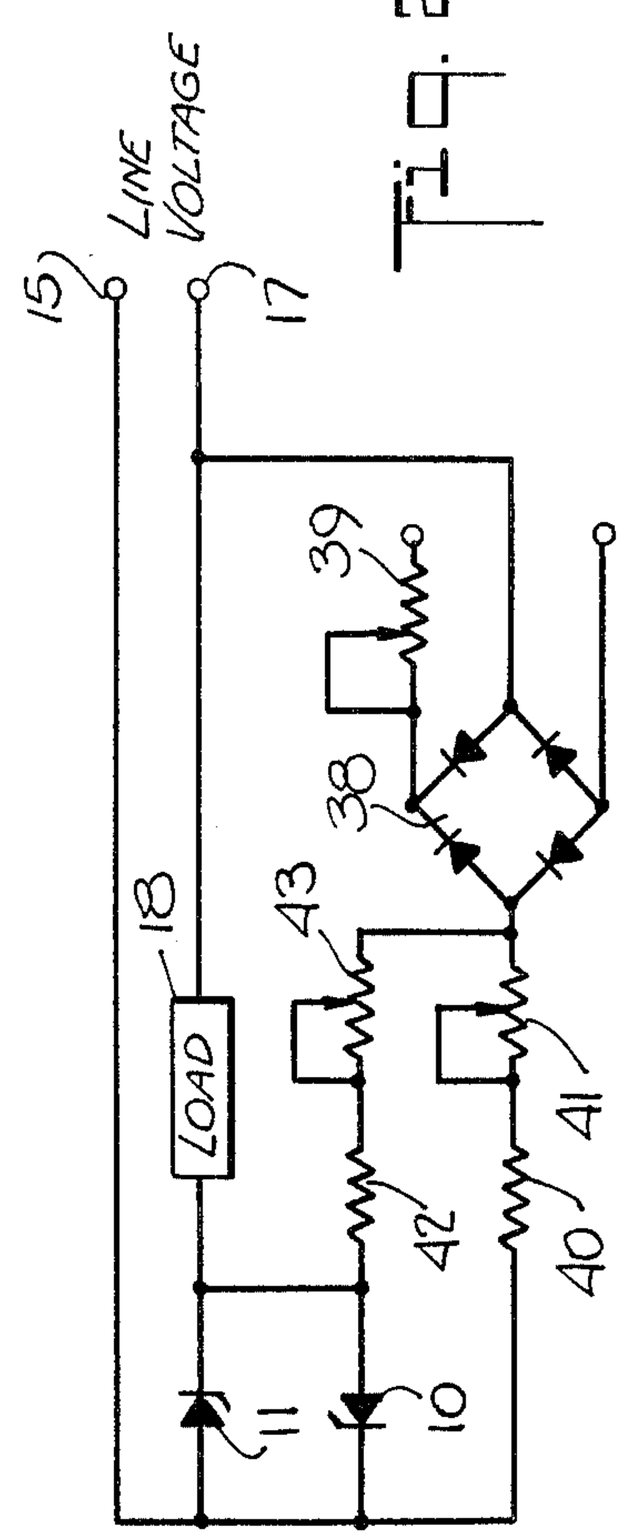

Fig. 2.

INVENTOR.
ARIEL R. DAVIS
BY
Frank G. Bauer
ATTORNEY

United States Patent Office

3,290,555

Patented Dec. 6, 1966

3,290,555

SILICON CONTROLLED RECTIFIER DIMMER

Ariel R. Davis, Salt Lake City, Utah, assignor to B. J. Management Corporation, Salt Lake City, Utah, a corporation of Utah

Filed June 9, 1964, Ser. No. 373,704

4 Claims. (Cl. 315—194)

This invention relates to silicon controlled rectifier systems for supplying current to incandescent lamps and is directed particularly to controlling the relationship of the emitted light and the means for setting the level of intensity over the range from full bright to dimout.

In lowering or raising the illumination of an incandescent lamp it is desirable that the observed change of illumination is at a uniform rate. Due to the physiological response of the eye an actual constant or uniform rate of change of illumination is not observed as uniform. It has been determined that a square law change in illumination produces an apparent uniform change to an observer. Various silicon controlled rectifier dimming equipment have endeavored to produce a square law change of illumination. Some equipment deviates substantially at various portions or over the entire range. Other equipment attains the desired relation but is complicated in design and expensive.

An object of the invention is to provide a silicon controlled rectifier dimmer that produces a square law change of illumination and is inexpensive to manufacture.

Another object of the invention is to provide a feedback control over the entire range of illumination.

Other and further objects and advantages will be apparent from the following description taken in connection with the drawings in which:

FIG. 1 is a schematic view of the circuit, and

FIG. 2 is a fragmentary view of the feedback circuit.

The silicon controlled rectifiers **10** and **11** are connected in back to back relation by lines **13** and **14** for conducting alternate halves of an alternating current. The line **13** is connected to the alternating power input terminal **15** through a choke **16** and the line **14** is connected to the input terminal or neutral **17** through the incandescent load **18**. The silicon controlled rectifiers are connected to the secondary windings **21** and **22** of the peaking transformer **19**. The primary winding **20** is connected to the magnetic amplifiers **23** and **24** for receiving a current therefrom.

The magnetic amplifiers **23**, **24** have anode windings **25**, **26**, respectively connected in parallel with rectifiers **27**, **28** in series therewith. The control windings **29**, **30** are connected in series to a pulsating direct current source across terminals **31**, **32**. The input control voltage is determined by the potentiometer **33**. In series with the windings are resistors **34** and **35** for setting the level of the control current.

The feedback windings **36** and **37** are connected in series to the full wave bridge rectifiers **38** to receive a pulsating direct current therefrom. A resistor **39** is connected in series with the winding for adjusting the level of feedback current. The feedback is attained through resistors **40**, **41**, **42**, **43** connected in series across the silicon controlled rectifiers. The resistors are connected between lines **13** and **14**. The alternating terminals of the bridge **38** are connected to the neutral **17** and between resistors **41** and **42**. Thus two different currents are obtained.

The anode windings **25**, **26** each pass an alternate half cycle and thus the cores are alternately driven to saturation. The voltage is supplied from the terminals **44** and **45**, terminal **45** being connected to neutral and terminal **44** being connected to input **15** through resistor **46**. The parallel connected anode windings are connected at one end to neutral and at the other end through the rectifiers **27**, **28** to the primary winding **20**. The gas discharge tube **47** is connected across the terminals **44**, **45** and the primary winding **20** may be connected to terminal **44**. However, it is preferable that a potentiometer **49** and resistor **48** be connected across the terminals **44**, **45** and gas discharge tube **47** and the primary winding **20** connected to the variable tap of potentiometer **49**. The gas discharge tube **47** maintains the saturating current substantially constant and the adjustment of the tap controls the level of the current and increases the sensitivity of the dimming control. Silicon controlled rectifier dimmers of the magnetic amplifier type cause a slight glow of the lamp load at the zero setting. This is also true of the present amplifier when primary winding **20** is connected to terminal **44**. However, with the primary winding connected to the variable tap, the values of the current through the primary winding may be adjusted so that the control potentiometer **33** turns the lights off.

The timing of the saturation is set by the control windings **29**, **30** and feedback windings **36**, **37**. Since the magnetic amplifiers are operative only on alternate half cycles the flux of the core may be reset by the feedback windings **36** and **37**, respectively, a desired amount to adjust or compensate for departures of the output from the square law relation.

The particular feature of this invention is the arrangement of the feedback. The resistors **40**, **41** are connected between lines **13** and neutral by means of the bridge rectifier **38**. Current thus is provided over the dimming range for adjusting the level of feedback flux. The resistors **42**, **43** are connected between line **14** and neutral or in series with the rectifiers **10** and **11** between terminal **15** and neutral. When the rectifiers are not passing current the voltage is absorbed by the rectifiers and no current passes through resistors **42**, **43**. However, as the rectifiers become conductive more current flows which provides corrective action at the higher levels of illumination. By adjustment of the resistor **42** considerable variation in the illumination curve can be attained particularly at the high and middle ranges of illumination. The curve of illumination versus control may be moved from substantially above to substantially below the square law curve.

The resistor **41** has substantially less effect since the values of resistors **40**, **41** are substantially greater than the values of resistors **42**, **43**. The resistor **41** moves the curve up and down a few percent. This small amount has considerable effect at the low illuminations in view of the small values involved. The adjustment of the resistor **39** in the direct current portion of the feedback positions the curve along the control axis. The resistor **34** matches the maximum control voltage to the operative voltage range of the control winding so that the potentiometer **33** is effective over the entire movement.

For example, the resistors may have the following values to produce the desired operation, **34**, 10K; **35**, 10K; **39**, 10K; **40**, 100K; **41**, 300K; **42**, 25K; **43**, 22K; **46**, 2.2K. In another example, resistors **34** and **35** may be 10K and 5K respectively, resistors **40** and **41** a combined resistance of 100K, resistors **42**, **43** a combined resistance of 33K; resistor **39** may be 1.5K, resistor **46** may be 2.2K, resistor **48** may be 3.5K and potentiometer **49** may be 2K.

A particular feature of the invention is the inexpensive structure of the magnetic amplifiers and peaking transformers. The magnetic amplifiers have rectangular shaped cores of the three legged type and may be made of low nickel iron. The peaking transformer core may be of a low silicon iron. The anode windings are of 2,500

turns, the control winding of 4,000 turns and the feedback winding of 2,000 turns. The primary winding and secondary windings of the peaking transformer are 1,500 turns and 500 turns respectively.

In the foregoing description a solid state controlled rectifier dimmer has been described that has a minimum of elements and varies the illumination of the lamp in a given relation to the control portion. Thus the dimmer may be adjusted so that the illumination follows a square law relation to the control portion.

I claim:

1. Electrical control apparatus for controlling the current applied from a first and second input voltage terminals to an incandescent lamp load to vary the illumination over a range in response to an input control comprising silicon controlled rectifiers connected in back to back relation across said input voltage terminals to pass alternate halves of an alternating load current, a peaking transformer having two secondary windings connected to a respective silicon controlled rectifier for applying a firing pulse initiating conduction of a respective rectifier and having a primary winding, two magnetic amplifiers each having a rectangular shaped core with an anode winding, a control winding and a feedback winding, said anode windings each having a rectifier connected in series therewith, said series anode windings and rectifiers connected in parallel for passing alternate half cycles, and said parallel connected combination of series connected anode windings and rectifiers connected in series with said primary winding, input control means, said control windings connected in series to said input control means for varying the lamp load over an illumination range, a resistor network consisting of at least two resistors connected across said silicon controlled rectifiers and said input voltage terminals, a full wave bridge rectifier with alternating input terminals and direct current output terminals, said feedback windings connected in series to said direct current output bridge terminals for receiving a current to reset the level of the cores, one of said alternating current input bridge terminals being connected between said resistors and the other of said alternating current input terminals being connected to said second input voltage terminal, said resistor of said network connected to the first input terminal being substantially larger than the other resistor and passes a substantially constant current over the illumination range providing for adjustment of the relation of illumination and said input control means, and the other resistor passing current as the silicon controlled rectifiers are conductive to provide adjustment of the relation of illumination and said input control means at the higher illuminations whereby the relation of input control means and illumination of the lamp load may be effectively adjusted over the entire illumination range.

2. Electrical control apparatus for controlling the current applied from input voltage terminals to an incandescent lamp load comprising silicon controlled rectifiers connected to pass alternate halves of an alternating load current, a peaking transformer having a primary winding and two secondary windings connected to a respective silicon controlled rectifier for applying a firing pulse thereto and initiating conduction of a respective rectifier, magnetic amplifier means having anode windings connected in series with said primary winding to pass saturating anode current and having control means for varying the time of saturation over each half cycle to set the level of illumination of the lamp load, a voltage limiting device connected across said input voltage terminals, a resistor connected across the voltage limiting device and said primary winding connected to said resistor to permit the incandescent lamp load to be turned completely off by said control means.

3. Electrical control apparatus for controlling the current applied from first and second input voltage terminals to an incandescent lamp load comprising solid state controlled rectifiers connected in series with said incandescent lamp load across said input voltage terminals for controlling alternating current passing through said load, phase shifting means connected to said rectifiers for applying firing pulses to said rectifiers variable in phase over each half cycle, input control means connected to said phase shifting means for varying the time of firing of said rectifiers, a resistance network connected across said solid state controlled rectifiers and to said first input voltage terminal, rectifying means having a direct current output connected to said phase shifting means and having an alternating current input connected between an intermediate point of said network and said second input voltage terminal, a portion of the resistor network connected to said first input terminal having a substantially greater resistance than the remaining portion and passing a substantially constant current over the range of illumination while said remaining portion passes current varying with the conductivity of the rectifiers to provide adjustment of the relation of said input control means and lamp load illumination over the entire illumination range to attain the desired relation between the input control means and the illumination of the lamp load.

4. Electrical control apparatus for controlling the current applied from first and second input voltage terminals to an incandescent lamp load comprising solid state controlled rectifiers connected in series with said incandescent lamp load across said input terminals for controlling alternating current passing through said load, phase shifting means connected to said rectifiers for applying firing pulses thereto variable in phase over each half cycle, input control means connected to said phase shifting means for varying the time of firing of said rectifiers, a resistor network connected across said solid state controlled rectifiers and to said first and second input terminals, rectifying means having a direct current output connected to said phase shifting means and having an alternating current input connected between an intermediate point of said resistor network and said second input voltage terminal with the portion of the resistor network between the intermediate point and the first input terminal remaining providing a substantially constant correction of the relation of said input control means and the illumination over the range of illumination and with the portion of the resistor network between the intermediate point and the second terminal providing a correction of the relation of said input control means and the illumination varying with the conductivity of the rectifiers and increasing the amount of correction available at the brighter portion of the illumination range to attain the desired relation between the input control means and the illumination of the lamp load.

References Cited by the Examiner

UNITED STATES PATENTS

3,142,781	7/1964	Izenour	315—199 X
3,193,725	7/1965	Skirpan	315—194

JOHN W. HUCKERT, *Primary Examiner.*

A. M. LESNIAK, *Assistant Examiner.*