Dec. 6, 1966 A. M. SENKEWICH 3,290,550

TRANSFORMER HAVING CONDUCTIVE GASEOUS WINDINGS

Filed March 4, 1965

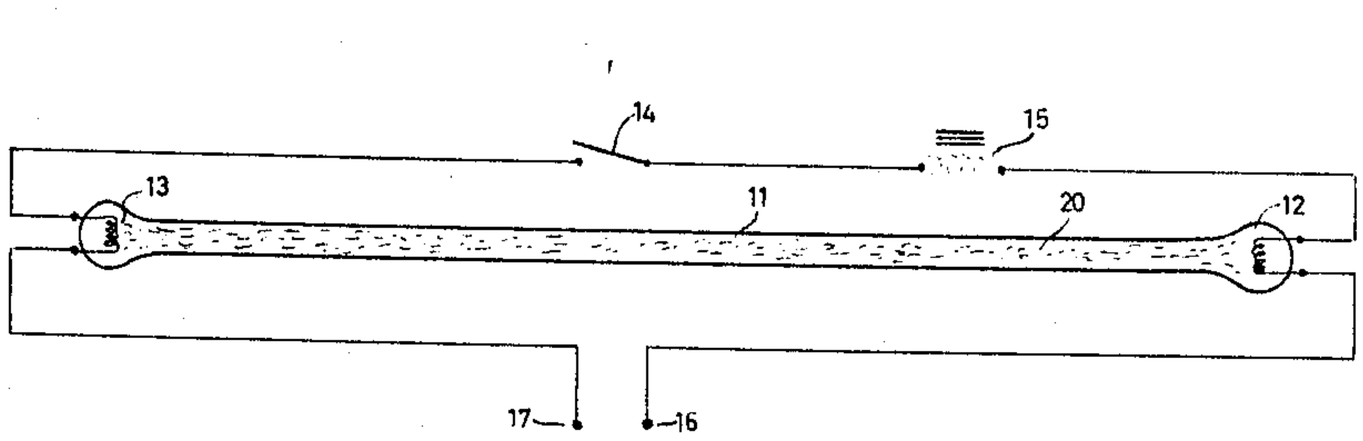

Fig. 1

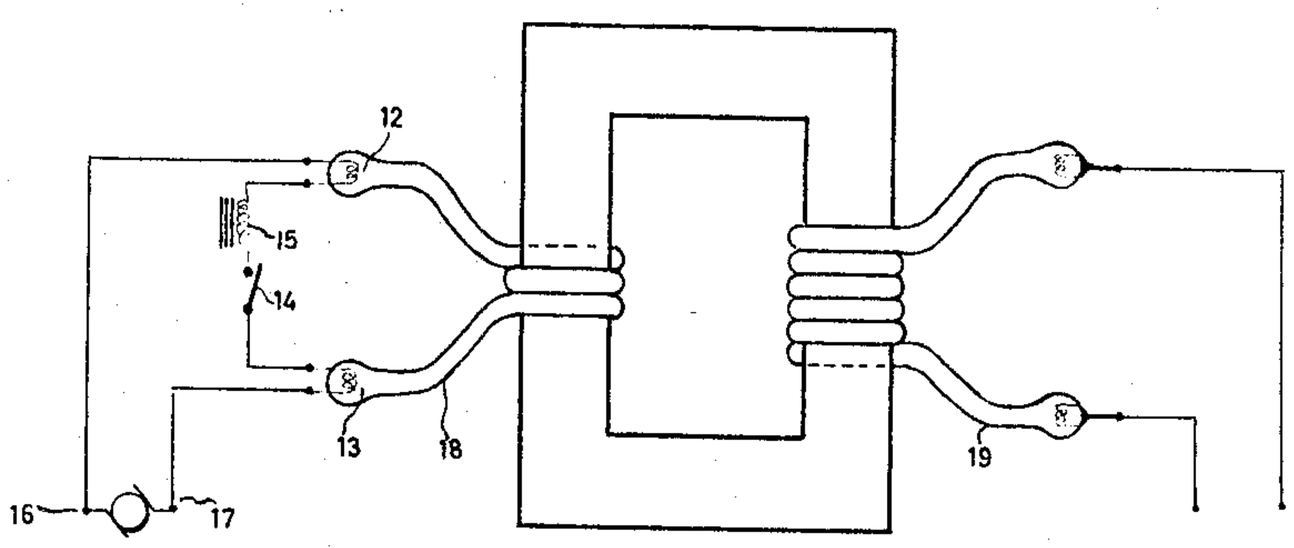

Fig. 2

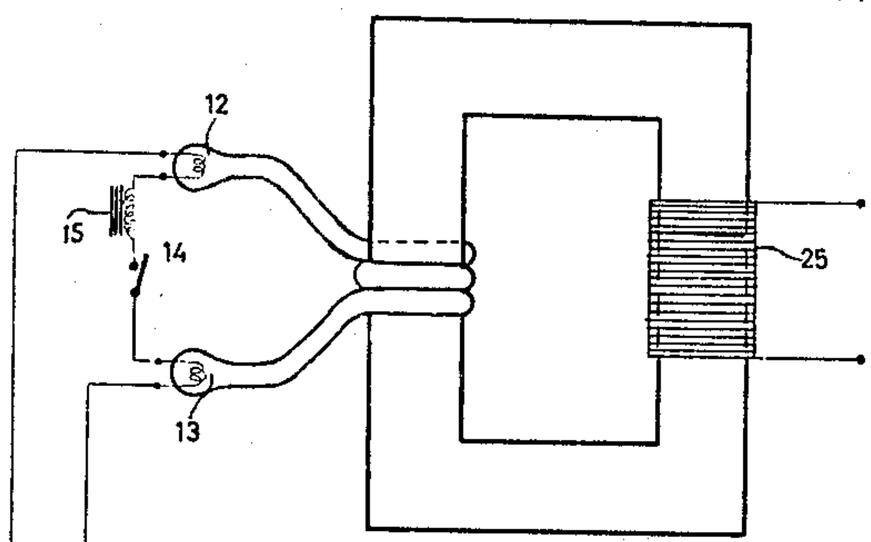

Fig. 3

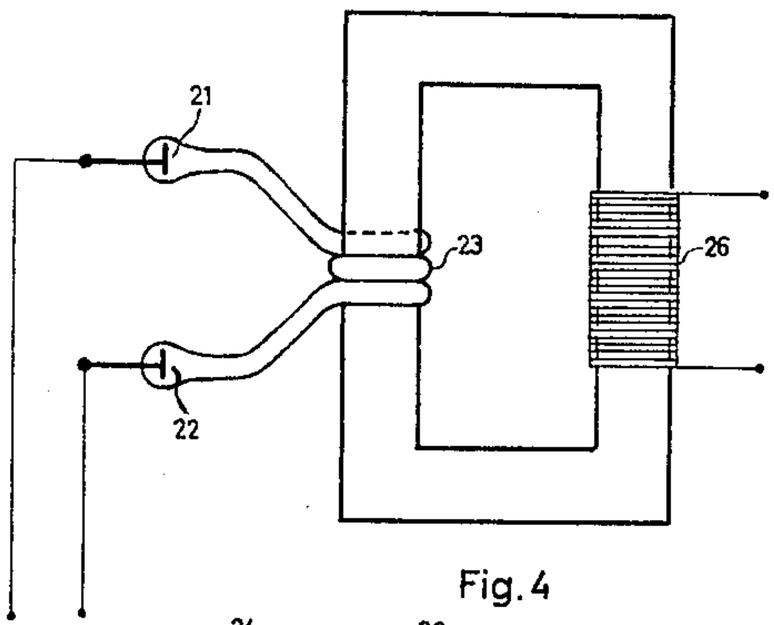

Fig. 4

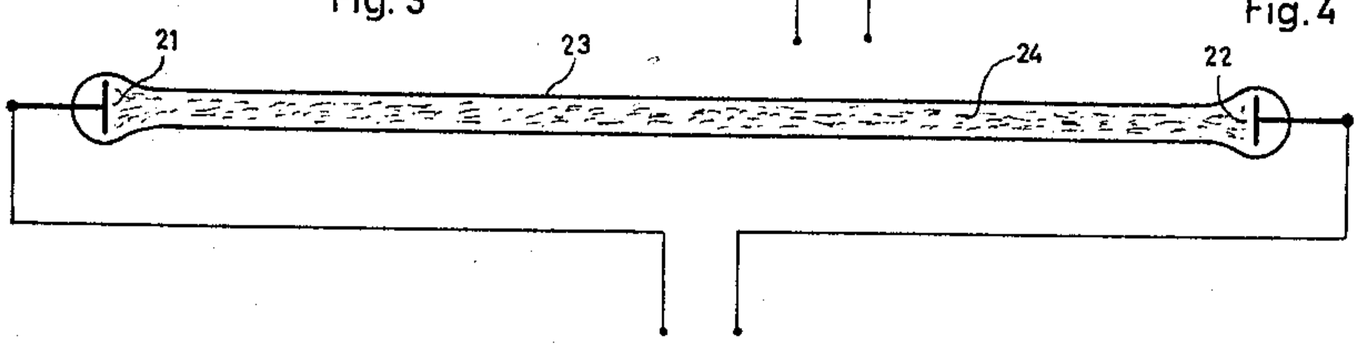

Fig. 5

INVENTOR.

Alexander M. Senkewich

United States Patent Office

3,290,550

Patented Dec. 6, 1966

3,290,550
TRANSFORMER HAVING CONDUCTIVE GASEOUS WINDINGS

Alexander M. Senkewich, New York, N.Y., assignor of five percent to James M. Heilman, Rye, N.Y., and five percent to Marjorie Kingston, Flushing, N.Y.

Filed Mar. 4, 1965, Ser. No. 437,079
3 Claims. (Cl. 315—57)

As it is known, an ordinary transformer consists of an iron yoke, primary wire winding and the secondary wire winding. The primary winding creates alternating magnetic fields on the core of the yoke. The changing of the magnetic polarity of the yoke due to the action of the alternating current creates induced currents in the secondary winding of the transformer. The main disadvantages of the existing transformer consists of the following:

(1) When the transformer is overloaded, very often the primary winding burns out and the transformer becomes inoperative.

(2) Large weight of the transformer.

In order to avoid these disadvantages in fabricating a tube or transformer winding, one may use a pipe made of insulating, fire resistant material (quartz, heating resisting glass and others) instead of the wire, which would create alternating magnetic fields around the yoke, if an alternating current would circulate inside that pipe. In order for the alternating current to circulate inside the pipe, it is necessary to have inside the pipe a current carrying medium with the smallest ohmic resistance.

FIG. 1 shows the pipe having an electrically conducting medium.

FIG. 2 shows the transformer, where the primary and secondary windings are pipe type and the input voltage is low.

FIG. 3 shows the transformer where the primary winding is pipe type, and the secondary winding is wire type.

FIG. 4 shows the transformer where the primary winding is pipe type, but instead of the heater filaments disc type electrode with a stem is used. The secondary winding is wire type.

FIG. 5 shows a pipe with the disc type electrode with a stem.

In order to create inside the pipe a current carrying medium with the smallest ohmic resistance, a vacuum pipe **11** (FIG. 1) made of an insulating and fire resistant material (quartz, heat resistant glass) is taken and filled with an electrically conducting gas (xenon, argon, neon or others). Small addition of mercury vapors will add to the conductivity of the medium. In addition, thin wires **12** and **13**, heater filaments, electrodes, on which an alkaline, earth metal (barium, sodium, postassium or others) is deposited, are welded into both ends of the pipe. When heated, these heater filaments **12** and **13** emit electrons **20**. Electrons and the heat rays together with the mercury vapors in the current carrying gas create a favorable medium for the circulation of the alternating current between the heater filaments.

An external indication of the fact that the alternating current does actually circulate between the heater filaments is apparent from the lighting of the medium inside the pipe. If the transformed voltage is not sufficient for the ignition of the beam between the heater filaments, then this ignition of the ray may be accomplished by the extra-current from the choke coil. If the above described pipe **11** (FIG. 1) with the current conducting medium is bent to a shape of a spiral and the arm of the yoke of the transformer is placed inside such a spiral and the alternating current is connected to the contacts **16** and **17**, then the ray of such a spiral will create magnetic fields in the arm of the yoke. The power of the

magnetic fields will correspond to the magnitude of the current used by the beam of the spiral. This will be the transformer's primary pipe winding **18**. If a spiral shaped pipe is placed also on the other arm of the yoke of the transformer as a secondary winding **19** rigged up in a same way as the primary winding then an alternating current created by the magnetic fields of the primary winding **18** of the transformer will be induced in it. The number of turns of the secondary winding will determine the calculated coefficient of transformation. If the transformed voltage is not sufficient for the ignition of the beam between the heater filaments, then the ignition of the beam may be accomplished by the extra current from the choke coil with the core **15**.

FIG. 1 illustrates pipe **11** where the ignition of the beam is accomplished by the extra current from choke coil **15**. When low alternating voltage is connected to contacts **16** and **17** and contact **14** is closed, then starting from contact **17** the alternating current will follow the path—filament **13**, contact **14**, choke coil **15**, filament **12**, and contact **16**. At this time, the filaments **13** and **12** are heated and will emit electrons **20** which will flow from filament **13** to filament **12** and back depending on the half-period polarity of the feeding current. The electron stream will always emanate from the filament having a negative half-period to the filament having a positive half-period. The electron stream will pulsate in accordance with the frequency of the alternating current feeding the winding. At the moment when contact **14** is disconnected, choke coil **15** for an instant creates extra current of high voltage which will be sufficient for igniting the beam between filaments **13** and **12**. Further contact **14** remains disconnected and the heating of the filaments will be sustained by the current which will circulate between filaments **13** and **12**. Now the path of the alternating current will be as follows: contact **17**, heater filament **13**, the current carrying medium of the pipe, heater filament **12** and contact **16** (FIG. 1) and (FIG. 2). The secondary winding **19** (FIG. 2) is also pipe type, however it does not have the choke coil since it is supposed that the alternating voltage taken off the secondary winding **19** is sufficient for igniting the beam between the heater filaments of the secondary winding. If this voltage is not sufficient then for the ignition of the beam of the secondary winding the extra current from the choke coil is used according to the method described for the primary pipe winding **18**. For the transformation of high voltage there is no need to utilize the hot cathodes in the form of heater filaments inside the tube, and to use the choke coil for igniting the beam in the pipe. Instead of the heater filaments it is necessary to attach disc type electrodes with stems **21** and **22** to the ends of the tube **23** (FIG. 5). Alkaline earth metal (barium, sodium, potassium or others) is deposited on these disc type electrodes.

At high transforming voltage, the heat formed by the beam is sufficient for the creation of the electron stream **24** from one electrode **21** to the other electrode **22** and back. This voltage is sufficient for the ignition of the beam. Here a more powerful beam of electrons is created which in turn creates a greater conductivity medium with smaller ohmic resistance.

FIG. 4 shows the transformer where the primary winding is pipe type. This transformer is intended for the transformation of high voltage sufficient for igniting the beam in the pipe. As it is evident here, the discs with stems **21** and **22** are used as electrodes and not as heater filaments. FIGS. 3 and 4 show combined transformers where the primary windings are pipe type and the secondary windings are wire type **25** and **26**. While this type of transformers, it is possible to achieve an extremely high coefficient of transformation. Of course, a com-

bined transformer may be of the type where the primary winding is wire type and the secondary winding is pipe type. The pipe type winding may also be used for the polyphase current. The advantages of the pipe type transformer consist of the following:

(1) With the pipe type transformer, it is possible to achieve high coefficients of transformation.

(2) The primary winding of the transformer will not burn out when the transformer is overloaded.

(3) Changing pipe type windings is easier than changing wire type windings.

(4) The weight of the pipe type transformers is much smaller.

I claim:

1. An electrical circuit for passing electricity through a gas-filled tube composed of a gas-filled tube having heater elements in each end thereof, two contacts connected to an external source of electricity, a first conducting means connecting said contacts with one end of each of said heater elements, a second conducting means connecting the opposite ends of said heater elements to each other through a contact switch, and choke coil being positioned in said second conducting means whereby when current is passed through said heater elements they will be heated and throw off electrons, and when said switch is operated the choke coil will force an extra surge

of current through the tube and ignite the gas beam in said tube, a closed metallic yoke, said gas-filled tube wrapped around one leg of said yoke, and electrical conducting means wrapped around the opposite leg of said yoke whereby current of a different voltage will be induced in said electrical conducting means.

2. A transformer as set forth in claim 1, wherein said electrical conducting means is a glass tube fitted with an electrical conducting gas whose windings are more numerous than the windings of the first gas-filled tube.

3. A transformer as set forth in claim 2, wherein the heater elements are filamentary electrodes of an alkaline earth metal, and a few drops of mercury are in said tube.

References Cited by the Examiner

UNITED STATES PATENTS

1,981,066	11/1934	Osnos	336—222
2,266,619	12/1941	Campbell	315—100

OTHER REFERENCES

Endler et al.: German application No. 1,091,670, pub. October 27, 1960.

LARAMIE E. ASKIN, *Primary Examiner.*

C. TORRES, T. J. KOZMA, *Assistant Examiners.*