Dec. 6, 1966 I. WEISSMAN 3,290,543

GRAIN ORIENTED DISPENSER THERMIONIC EMITTER FOR ELECTRON DISCHARGE DEVICE

Original Filed June 3, 1963 3 Sheets-Sheet 1

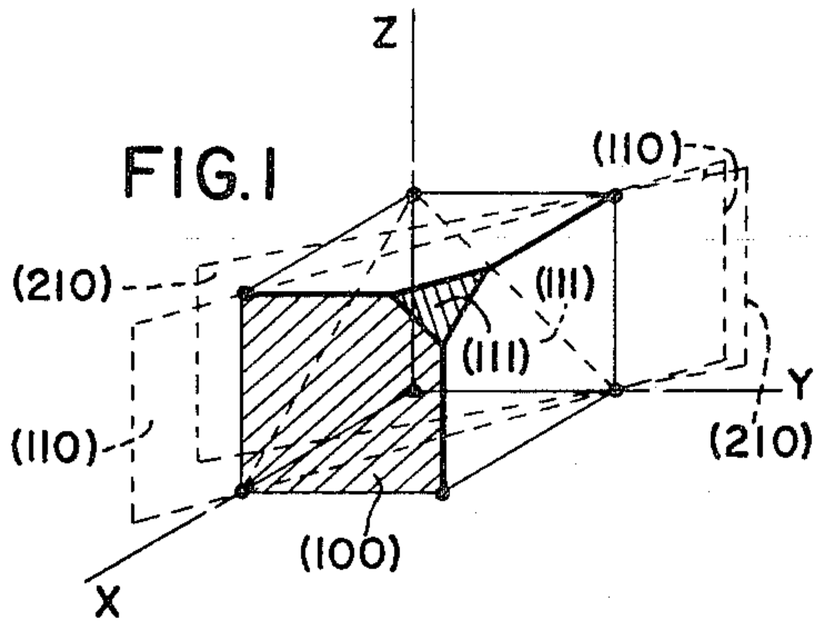

FIG. 1

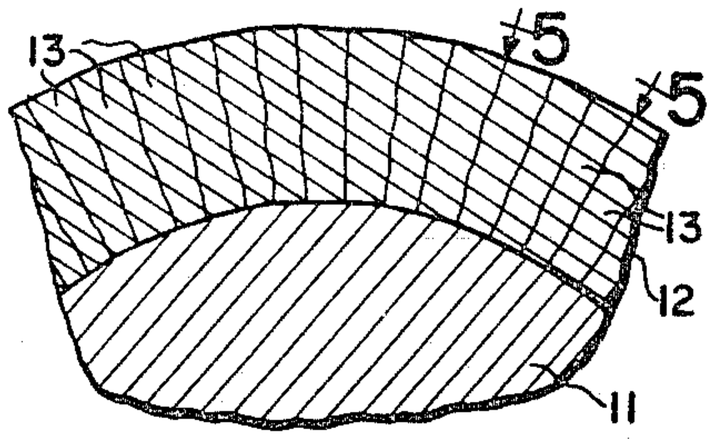

FIG. 4

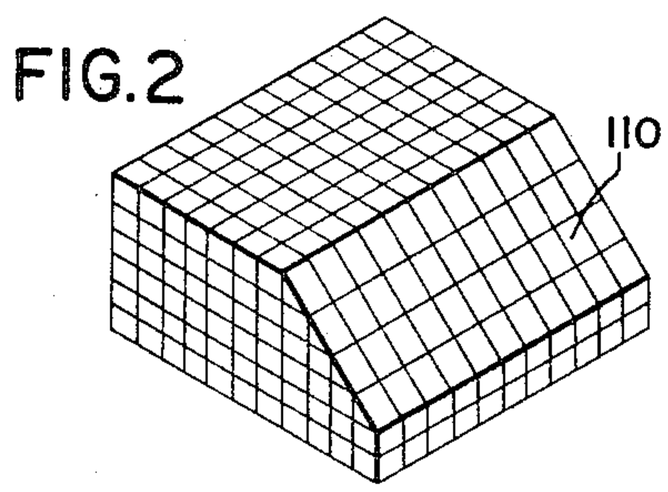

FIG. 2

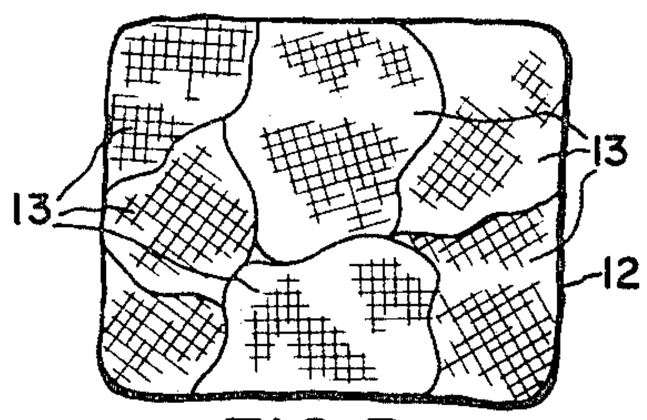

FIG. 5

FIG. 3

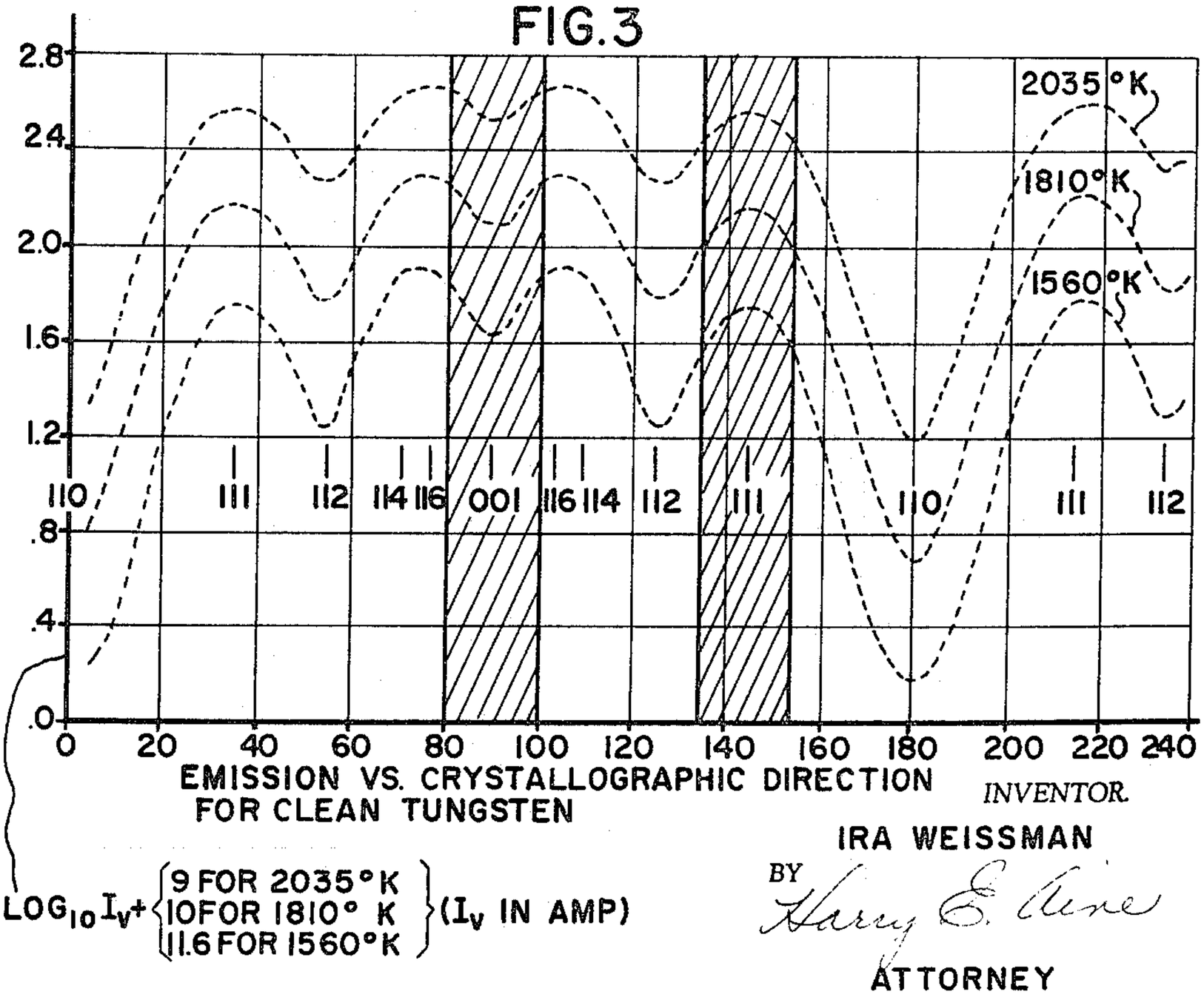

EMISSION VS. CRYSTALLOGRAPHIC DIRECTION FOR CLEAN TUNGSTEN

$LOG_{10} I_V +$ { 9 FOR 2035°K, 10 FOR 1810° K, 11.6 FOR 1560°K } (I_V IN AMP)

INVENTOR.

IRA WEISSMAN

BY Harry E. Aine

ATTORNEY

Dec. 6, 1966 I. WEISSMAN 3,290,543

GRAIN ORIENTED DISPENSER THERMIONIC EMITTER FOR ELECTRON DISCHARGE DEVICE

Original Filed June 3, 1963 3 Sheets-Sheet 2

FIG. 6

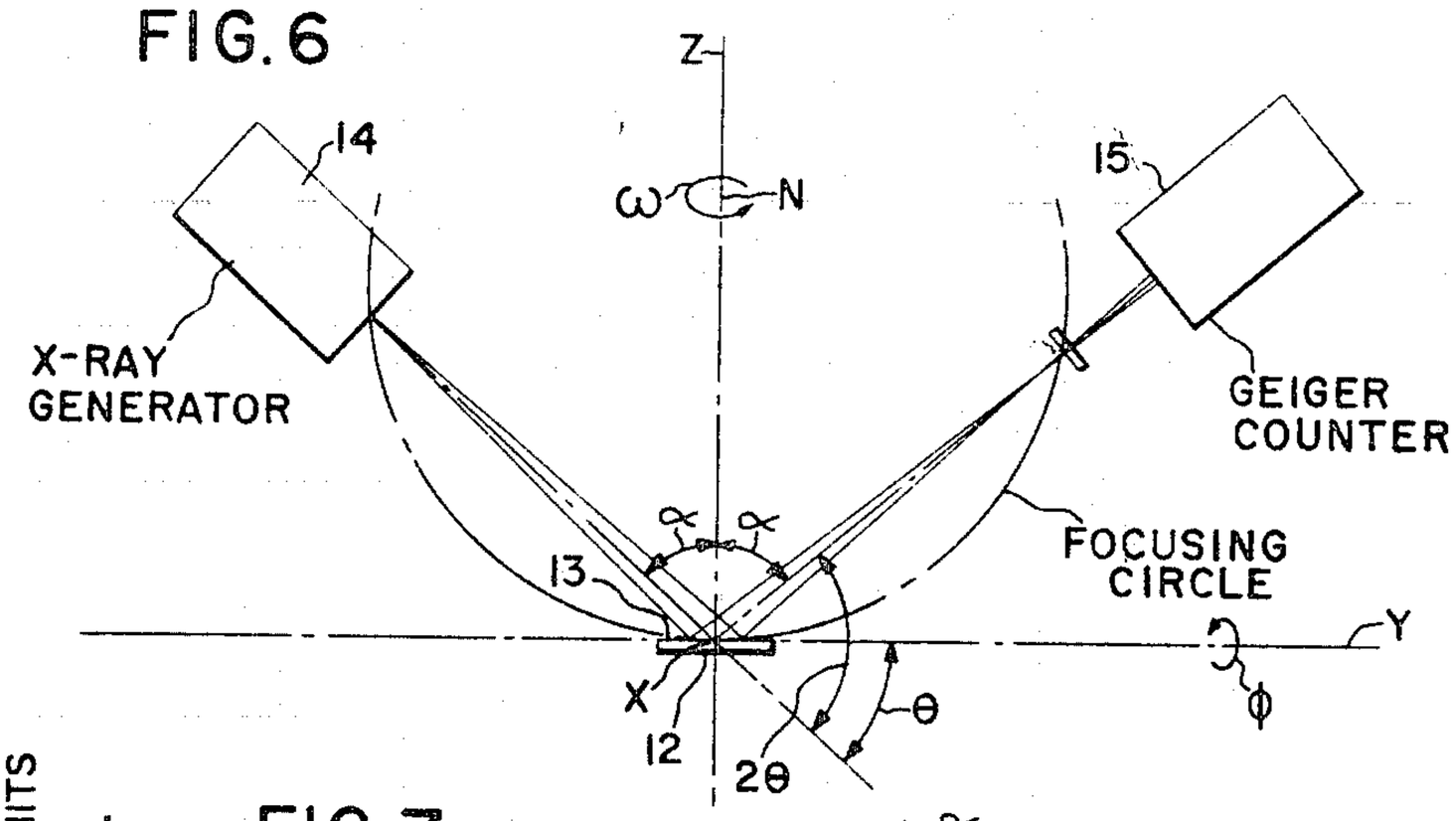

FIG. 7

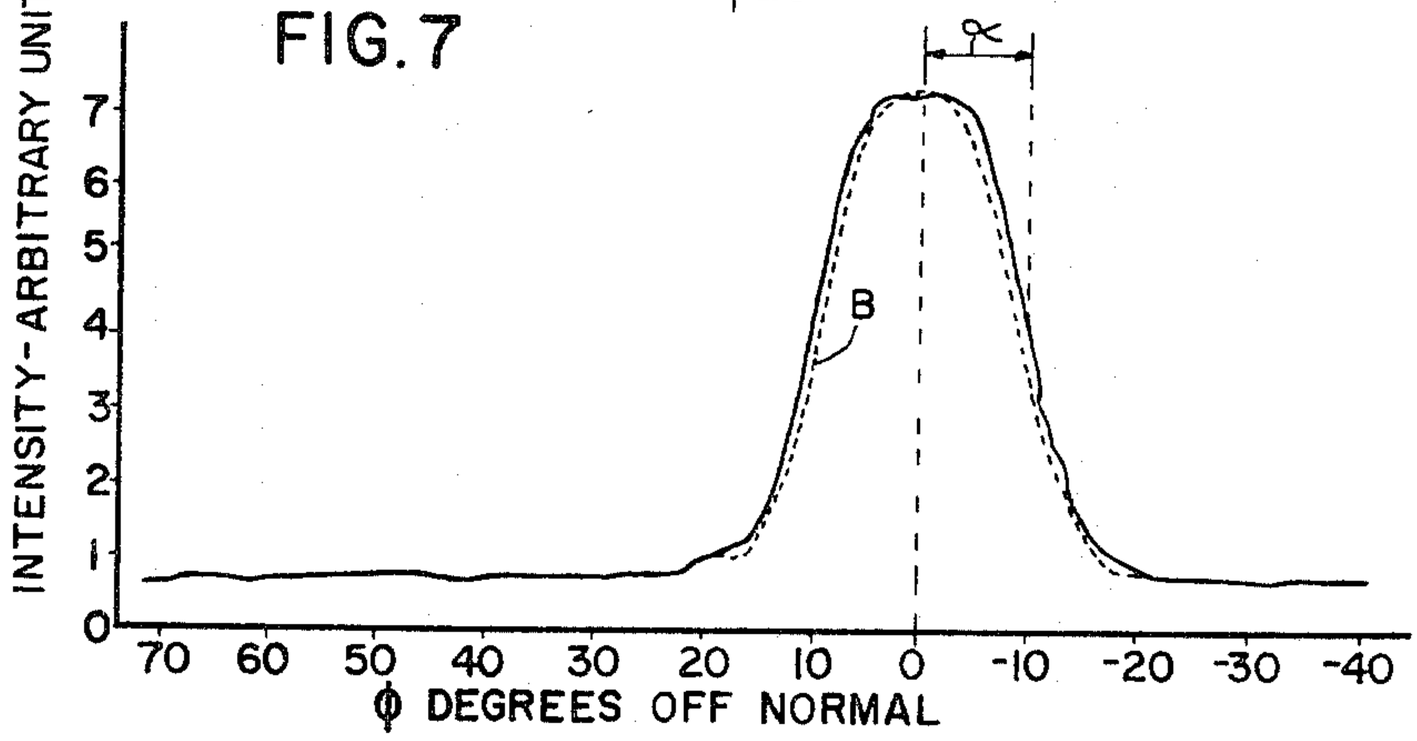

FIG. 8

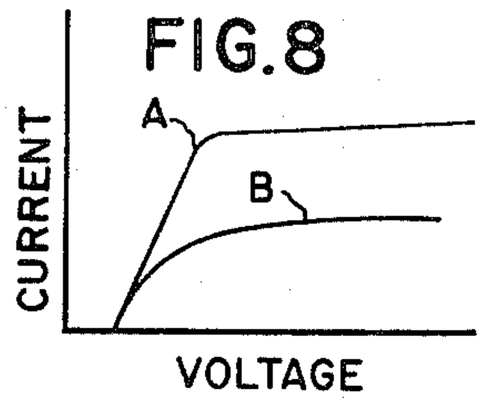

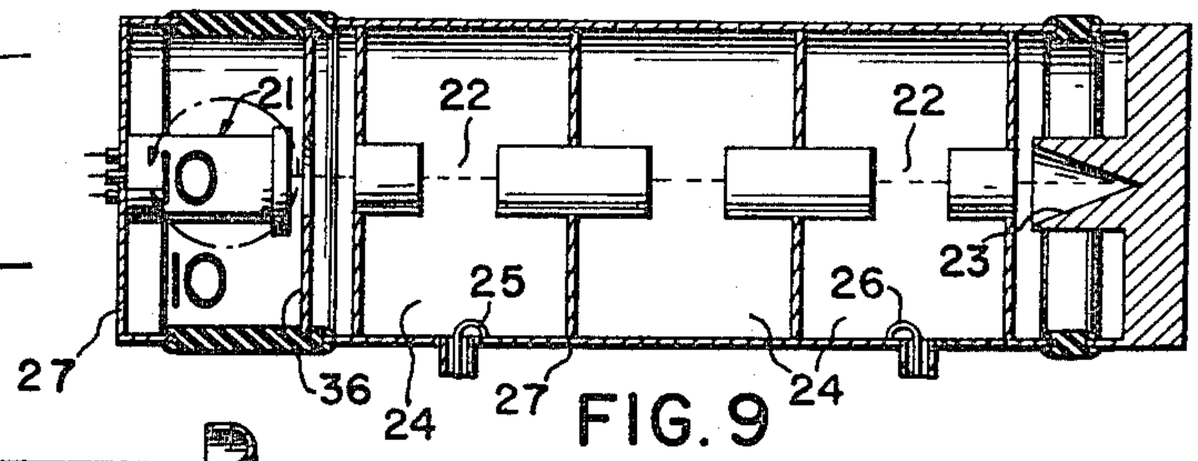

FIG. 9

FIG. 10

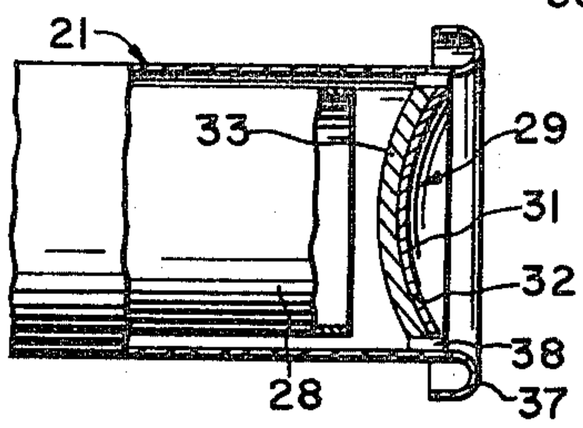

INVENTOR.
IRA WEISSMAN
BY Harry E. Aine
ATTORNEY

Dec. 6, 1966 I. WEISSMAN 3,290,543

GRAIN ORIENTED DISPENSER THERMIONIC EMITTER FOR ELECTRON DISCHARGE DEVICE

Original Filed June 3, 1963 3 Sheets-Sheet 3

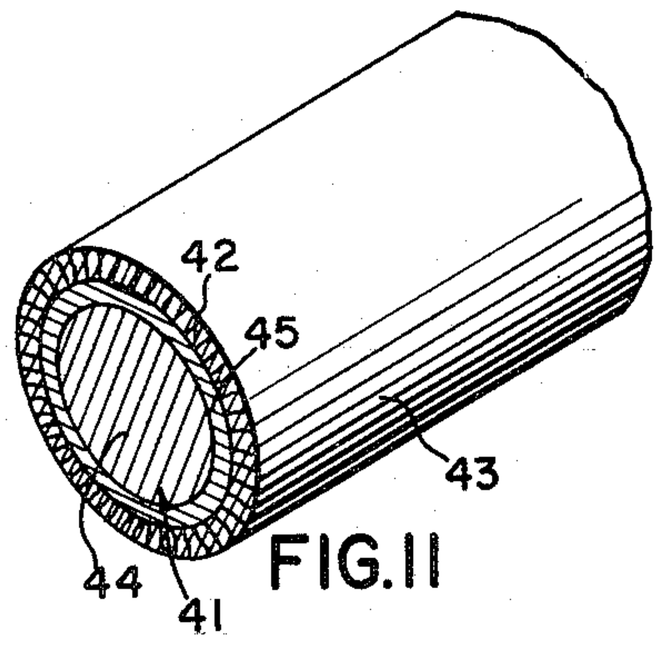

FIG. 11

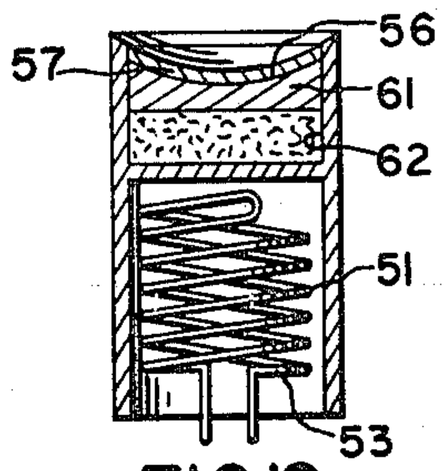

FIG. 12

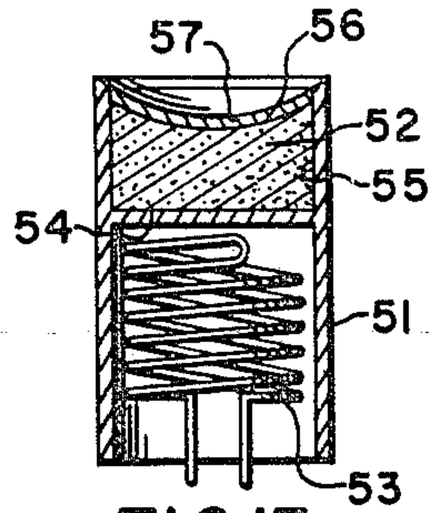

FIG. 13

INVENTOR
IRA WEISSMAN
BY Harry E. Aine
ATTORNEY

United States Patent Office

3,290,543

Patented Dec. 6, 1966

3,290,543

GRAIN ORIENTED DISPENSER THERMIONIC EMITTER FOR ELECTRON DISCHARGE DEVICE

Ira Weissman, Palo Alto, Calif., assignor to Varian Associates, Palo Alto, Calif., a corporation of California

Original application June 3, 1963, Ser. No. 285,150. Divided and this application May 13, 1964, Ser. No. 367,183

9 Claims. (Cl. 313—346)

The present invention is a divisional of my parent application, U.S. Ser. No. 285,150 directed to thermionic emitter for electronic discharge devices and methods of fabricating same, filed June 3, 1963, and assigned to the same assignee as the present invention.

The present invention relates in general to thermionic emitters and more particularly to polycrystalline emitter members having a grain oriented emitting surface coated with a thin film of low work function material which is desorbed in use and replenished in use by diffusion from a source through the surface of the emitter. Such emitters permit non-planar emitter surface geometries with greatly enhance demission properties and are especially useful in electron discharge devices of all types including but not limited to klystrons, traveling waves tubes, magnetrons and thermionic converters.

Heretofore it has been known that certain crystallographic planes of a single crystal emitter such as the 111, 116 and 012 planes of body centered cubic tungsten gave much greater emission than other crystallographic planes such as, for example, the 110 and 112 planes. In a single crystal emitter body the high emission crystallographic planes are found in plane surfaces. Therefore, single crystals are not applicable to curved emitter surface geometries as required for most practical emitter applications. In addition, large single crystals are very expensive to fabricate.

Heretofore non-planar emitter surfaces have been fabricated using polycrystalline emitter bodies. The resulting emitter surfaces have been made up of a multitude of crystallites with a more or less randow distribution of a great number of different crystallographic planes. Emitters having such a random distribution of crystallographic planes at the surface are generally referred to as being "patchy" since their work function varies from one crystal plane to another. Patchy emitters are characterized by a large fraction of the emission coming from a small fraction of the total surface, that part being the part containing high emission (or low work function) crystal faces in the surface. The remaining large fraction of the emitter surface contributes essentially nothing to the total electron emission while nonetheless radiating thermal energy from the emitter thereby further contributing to inefficient emitter operation. For thermionic converter emitter applications patchy emitters are further undesirable because only a small part of the emitting surface can have the work function which corresponds to optimum efficiency at its operating temperature.

Heretofore certain polycrystalline thermionic emitters have had a small amount of crystallite ordering produced by cold working, casting, etc. The effect on uniformity of thermionic emission of ordering thus produced has been negligible.

In the present invention polycrystalline thermionic emitters are formed with a highly grain oriented emitting surface coated with a thin film of electropositive or low work function material, the film material being desorbed in use and replenished in use by diffusion from a source through the emitting surface thereby resulting in far more uniform emission and non-planar emitter efficiences

approaching those of a coated high emission crystallographic plane surface of a single crystal.

The term "grain oriented" as used herein shall mean that for almost all of the crystallites or grains that constitute the emitting surface, the normal to one particular crystal plane is oriented within a "specified angle," α, to the normal of a plane tangent to the emitting surface. The direction of the normal to the particular crystal plane in question shall hereafter be called the preferred crystal direction. The "specified" angle shall be sufficiently small such that the average current density obtained from the emitting surface is at least double the current density drawn from a comparable randomly oriented polycrystalline emitter operating under comparable conditions.

The "crystal direction" of the crystallites and the "specified" angle are conveniently measured by means of X-ray diffraction. A graph showing the integrated intensity of X-rays diffracted from the plane corresponding to the preferred direction as a function of angular displacement of the preferred direction from the surface normal will be called a distribution function (see FIG. 7).

The angle (α) between that at which the distribution function falls to ½ its peak amplitude and that at which it has its peak amplitude is the "specified" angle referred to in the above paragraphs.

Grain oriented thermionic emitters, constructed according to the teachings of the present invention, will substantially increase the current densities obtained from emitters at a given temperature or allow the same emission at lower temperatures thereby increasing operating life. Use of thermionic cathode emitters of the present invention in thermionic converters, where uniform work function is particularly important, will lead to substantial increases in converter efficiencies from the low values of 10%–15% currently being obtained.

The principal object of the present invention is to provide improved thermionic emitters for use in electron tubes and to provide methods of fabricating such emitters.

One feature of the present invention is the provision of a novel polycrystalline thermionic emitters wherein the emitting surface is constituted of grain oriented crystallites and coated with a thin film of electropositive material which diffuses to the emitting surface therethrough whereby emitting efficiency is enhanced.

Another feature of the present invention is the same as the preceding feature wherein the crystallites form an overlay disposed upon a substrate and said coating material diffuses to said surface through said substrate.

Another feature of the present invention is the provision of a thermionic emitter according to any of the preceding features wherein the emitting surface is curved.

Another feature of the present invention is the provision of a polycrystalline thermionic emitter having a volt-ampere characteristic when tested in a diode characterized by an abrupt transition from fully space charge limited to fully temperature limited operation.

Another feature of the present invention is the provision of a novel electron discharge device employing a thermionic cathode emitter according to any one of the preceding features whereby device efficiency is enhanced and/or operating lifetime is increased.

Another feature of the present invention is the same as the preceding feature wherein the electron discharge device is a thermionic converter whereby conversion efficiency is enhanced and/or operating temperature is reduced.

Other features and advantages of the present invention will be more apparent after a perusal of the following specification taken in connection with the accompanying drawings wherein,

FIG. 1 is a line diagram defining certain crystallographic planes of a cubic crystal cell through the use of Miller Indices,

FIG. 2 is a schematic isometric diagram of a single cubic crystal,

FIG. 3 is a graph of emission vs. crystallographic direction for the 110 zone of a single crystal of tungsten,

FIG. 4 is an enlarged schematic drawing of a fragmentary cross-sectional view of an emitter of the present invention having an electropolished polycrystalline grain oriented deposit on a polycrystalline substrate,

FIG. 5 is an enlarged fragmentary schematic drawing of a portion of the structure of FIG. 4 taken along line **5—5** in the direction of the arrows,

FIG. 6 is a schematic diagram depicting an X-ray diffraction method for determining the crystallographic plane distribution at and near the surface of the emitter,

FIG. 7 is a section taken through an X-ray diffraction pole plot of a certain crystallographic plane in a grain oriented surface layer constituting the emitting surface of FIG. 4,

FIG. 8 is a current vs. voltage curve for both the emitter of the present invention (A) and a typical prior art patchy emitter (B), both used in otherwise identical diodes,

FIG. 9 is a longitudinal cross-sectional view of a microwave electron tube utilizing a cathode emitter employing features of the present invention,

FIG. 10 is an enlarged fragmentary cross-sectional view of the emitter portion of FIG. 9 delineated by line **10—10**,

FIG. 11 is an isometric view partly in cross-section of a filamentary emitter employing features of the present invention,

FIG. 12 is a longitudinal cross-sectional view of a thermionic dispenser emitter employing features of the present invention, and

FIG. 13 is a thermionic dispenser emitter alternative of FIG. 12 employing features of the present invention.

Referring now to FIG. 1 there is shown a cubic cell with the conventional orthogonal coordinate system wherein the axes are labeled *x*, *y*, and *z*. Crystallographic planes are conventionally defined by an index system utilizing "Miller Indices" and fully described in Introduction to Solid State Physics, by Kittel, 2nd edition, published 1956, pages 33 et seq. Briefly, the Miller Indices are three numbers (*h*, *k*, *l*) corresponding to the reciprocals of the points of intersection of the identified plane with the *x*, *y*, and *z* axes, respectively. In FIG. 1 the (100), (110), (111), and (210) crystallographic planes are depicted and identified. The crystal direction as previously defined is normal to a certain crystallographic plane and is identified by the same triplet of Miller Indices as is that plane (e.g., the 110 crystal direction is the direction normal to the 110 crystal plane).

FIG. 2 shows a single crystal of a cubic material such as tungsten or molybdenum. The crystal is formed by an ensemble of cubic cells. The cells are uniformly arranged and any arbitrary planes cut through the crystal will expose a surface constituted of a single crystallographic plane. Note that a surface constituted of a single crystallographic plane can not be obtained over a curved surface of the single crystal. Thus any curved surface taken through the single crystal is not uniform in the sense that different crystal faces are exposed over it.

FIG. 3 shows the emission from the different crystallographic planes of the 110 zone of a single crystal of tungsten as measured by G. F. Smith, Physical Review, vol. 94, page 295 (1954). Emission peaks are shown for the (111), and (116) crystallographic planes. Lowest emission was obtained from the (110) planes. The (116) plane corresponds to the lowest work function of 4.30 ev. and the (110) plane corresponds to the highest work function of 6.00 ev. The work function for the (111), (100), and (012) planes are 4.39 ev., 4.53 ev., and 4.34 ev., respectively. While the preferred planes of a single crystal emitter can be exploited at high cost for planar emitter geometries they are not applicable to non-planar geometries as found in most all emitter applications.

Polycrystalline thermionic emitters are ordinarily used in making curved emitting surfaces but these have heretofore been plagued with non-uniform or patchy emission. The principal cause of non-uniform emission from polycrystalline metals is the difference in work function of the various crystallographic planes that constitute the emitting surface. The average work function for a randomly oriented polycrystalline tungsten emitter is 4.52 ev. or about 0.2 ev. higher than the highest emission (116) crystallographic plane of a single crystal tungsten emitter. It should be noted that in the normal operating range of practical emitters a 0.1 ev. change in work function corresponds to 60° K. change in operating temperature for the same emission. Also that a 10% change in work function produces a ten fold change in emission at the same operating temperature. Patchy emitters typically have work function variations over them of the order of 10%. Thus low work function regions, though they may represent a relatively small fraction of the total surface area, will produce a large fraction of the total emission, while high work function areas will, relatively speaking, be thermionically dead.

Table I illustrates the approximate improvement that could be realized if the total surface were made uniformly low work function, starting with various patchy surfaces having both high and low work function regions. In this approximation interpatch effects are neglected.

TABLE I

Initial Fractional Area Of High Emission Surface	Contribution To Total Emission Produced By Fractional Areas Of High Emission [1]	Available Increase In Emission By Making Total Surface of High Emission [1]
1/20	1/3	700%
1/10	1/2	500%
1/5	2/3	350%
1/2	10/11	200%

[1] Assuming a 10% difference in work function between the high emission area and low emission area of the total emitting surface.

Referring now to FIG. 4 there is shown a fragmentary cross-sectional view of a filamentary emitter constructed according to the teachings of the parent application. More particularly, a refractory metal wire or substrate **11** as of, for example, tungsten, molybdenum, rhenium, niobium, tantalum, etc., is overlayed with a layer **12** of grain oriented polycrystalline refractory material as of, for example, one or more of the aforementioned refractory metals.

Although a number of different methods may be suitable for forming the grain oriented layer **12** a preferred method is that of chemical vapor deposition. This preferred method of deposition will be more fully described below and illustrated by FIG. 20.

In a typical example of a filamentary emitter structure (FIG. 4) of the present invention, a 0.006" diameter tungsten wire **11** is overlaid with a 0.0005" thick deposit of grain oriented tungsten by chemical vapor deposition from a constituent gas atmosphere of tungsten hexafluoride and a hydrogen reducing gas. By proper control of the thermodynamic and fluid dynamic parameters of the vapor deposition process a uniform growth of tungsten crystallites **12** is obtained over the outside of the tungsten wire **11**. The crystallites are elongated in the direction normal to the surface of the substrate wire **11** such as to form a grain oriented columnar structure with the columns being normal to the outside surface of the emitter. By proper control of deposition temperature, pressure, gas mixture, etc. the crystallite grains are oriented.

The outer surface of the deposited overlay is typically initially rough and possibly constituted of many different crystallographic planes. These surface irregularities are removed by, for example, electropolishing to expose the crystallographic planes **13** normal to the grain axes. In this manner the oriented crystallographic planes are exposed at the outer surface of the overlay **12** constituting the emitter surface. A preferred electropolishing method is described below in connection with the description of FIG. 20.

An indirect check of the distribution of crystallographic planes at the emitting surface can be obtained with X-ray diffraction as indicated in FIGS. 6 and 7 using a Norelco pole figure plotter. Briefly, an X-ray generator **14**, disposed in the Y–Z plane, projects a well columinated X-ray beam of characteristic K α radiation onto the emitting surface **13** of an overlay **12**. The overlay forms a plane surface parallel to the Y axis and is rotatable about the Y axis through angles ϕ. An X-ray detector **15** as, for example, a Geiger counter is positioned in the Y–Z plane to receive X-ray energy reflected from the overlay **12**. The X-ray detector **15** is arranged to receive reflected X-ray energy from the sample **12** substantially only from the same angle θ with the Y axis as the incident X-ray beam makes with the Y axis. The flat emitter layer **12** is also rotatable through angle ω about an axis, N, perpendicular to the plane of layer **12**. Plots of integrated intensity of received X-ray energy as a function of ϕ are made.

The angle θ uniquely determines the crystallographic plane that will be detected by the intensity of the diffracted signal according to the Bragg law, $\lambda=2d \sin \theta$. The crystallographic plane, in the polycrystalline layer **12**, of special interest is the plane parallel to the emitting surface since the emitting surface will be constituted of this plane when the surface has been properly smoothed and polished as verified by Khan et al., Physical Review, vol. 129, No. 4, February 15, 1963, page 1514.

A section taken through a pole plot of the (100) plane for a grain oriented tungsten deposit is shown in FIG. 7. This plot shows that the (100) plane of the deposited polycrystalline layer is predominately disposed parallel to the surface.

In addition to identifying the preferred crystal plane, the pole plot describes its distribution within almost the entire hemisphere about the surface normal. The half width (2α) of the plotted distribution is a meaningful measure of the degree of preferred orientation. The plot of FIG. 7, for an actual deposit, shows a typical half width of its distribution of approximately 20° with a peak intensity of 22 units. All plots thus far obtained for chemically vapor deposited tungsten have been cylindrically symmetric about the surface normal, N indicating no preferred orientation in the plane of deposition. Therefore, a single section of the full plot, for all angles of ϕ from 90° to +90° as in FIG. 7, defines the surface everywhere in the hemisphere.

A mild heat treatment, 1900° C. for 30 minutes, tends to improve the uniformity of the deposited surface. The distribution for the treated surface is shown as curve B in the plot of FIG. 7. FIG. 8 illustrates comparative volt-ampere characteristics of high vacuum diodes, identical in every respect except that one utilizes a grain oriented polycrystalline filamentary emitter and the other an ordinary polycrystalline emitter. Plot B shows the emission characteristics of the patchy filamentary emitter. Plot A shows the emission characteristics of the uniform work function polycrystalline emitter. The sharpness or abruptness of the "knee" of plot A shows the high degree of uniformity of the emission from the grain oriented emitter. The more the uniformity of the emissive surface the more abrupt the transition from fully space charge limited to fully temperature limited emission.

Surfaces which exhibit more uniform emission by the above criterion in vacuum, also exhibit more abrupt transitions from the retarding field region into the temperature limited accelerating field region when operating space charge neutralized in a low pressure positive ion atmosphere as encountered in some thermionic energy converters. Surface uniformity in thermionic converter emitters is very important.

The work function of the aforementioned uniform work function vapor deposited polycrystalline emitter, as measured from a positive ion neutralized diode volt-ampere curve, was 4.56 ev. This agrees almost perfectly with the accepted value of 4.53 ev., for the work function of the (100) crystal plane of a single crystal of tungsten. The diffraction pole figure plot of the deposit indicated a grain oriented surface with the (100) crystal plane oriented parallel to and constituting the emitting surface.

An electron tube incorporating a cathode emitter constructed according to the present invention is shown in FIGS. 9 and 10. The tube includes a cathode assembly **21** at one end for forming and projecting a beam of electrons **22** over an elongated beam path. A collector electrode **23** is disposed at the terminal end of the beam for collecting the electrons and dissipating their energies.

A plurality of cavity resonators **24** are successively arranged along the beam path in R.F. energy exchanging relationship with the beam passable therethrough. The cavity resonators **24** are disposed intermediate the cathode **21** and collector **23**. The upstream resonator includes an input terminal **25** for applying input R.F. signals to be amplified to the input resonator. The last or downstream resonator includes an output terminal **26** for extracting amplified R.F. wave energy from the tube. A vacuum envelope **27** surrounds the aforementioned tube elements for maintaining a suitable low vacuum as of 10^{-7} mm. Hg within the tube apparatus. The tube operates in the manner of the conventional klystron amplifier.

The cathode assembly **21** includes a Pierce type electron gun assembly and an electron bombardier type cathode heater **28**. The primary thermionic emitter member of the electron gun consists of a concave circular emitter member or structure **29** formed from a disk having a spherical concavely shaped segment forming the emitting surface **31**. The concave emitting surface **31** is constituted of a grain oriented polycrystalline refractory metal layer **32** to obtain uniform and enhanced emission as compared to randomly oriented polycrystalline emitters.

In a preferred embodiment the metal layer **32** is deposited on a concave refractory or high melting point material substrate **33** preferably as of, for example, tungsten or thoriated tungsten. The grains of the layer **32** are preferably elongated into columnar form with their longitudinal axes directed normal to the surface of the substrate and to the concave emitting surface **31**. The crystallites of the layer **32** are oriented such that emission is enhanced.

The heater **28** bombards the back side of the substrate **33** with electrons of substantial energies as of 2500 ev. to heat the cathode emitter to its operating temperature of approximately 2000° C.

A centrally apertured anode electrode **36** is spaced from the emitter **29** and operated at a suitable positive potential relative to the cathode emitter as, for example, +17.5 kv. The anode **36** is provided with a flared aperture in axial alignment with and coaxially disposed of the cathode emitter **29** for drawing therethrough a converging electron stream.

A cylindrical focus electrode **37** as of tantalum surrounds the outer periphery of the concave emitter button and serves to support the emitter **29** via the intermediary of a plurality of inwardly directed tangentially contacting fingers **38** as of tantalum spot welded at their ends to both the focus electrode **37** and emitter button **29**.

The advantage of the uniform thermionic emitter surface as above described is that it permits the tube to operate at higher power levels for the same cathode operating

temperature previously used for patchy emitters or it permits the same power output at lower cathode operating temperature thereby substantially increasing tube operating life as compared to tubes using patchy emitters.

Referring now to FIG. 11 there is shown an isometric view of a thermionic emitter embodiment incorporating features of the present invention. More particularly, a thoriated tungsten emitter member 41 is overlaid with a deposit 42 of a grain oriented refractory metal, as described above, to obtain more uniform and enhanced emission from the emitting surface 43.

This embodiment is illustrative of the wide variety of possible substrate materials to which the grain oriented overlay may be adhered to obtain uniform emission characteristics. The improved thermionic emitter structure of FIG. 11 uses, in addition to the surface uniformity features of the aforementioned parent invention the porosity feature of the polycrystalline grain oriented overlay. This porosity feature permits a low work function material as, for example, thorium to continuously diffuse through the grain boundaries, to the surface and to diffuse over the surface of the emitter to uniformly lower the work function of the emitting surface 43.

In a typical example of the thoriated tungsten emitter of FIG. 11 the thoriated tungsten substrate 41 is formed of a 0.006" diameter thoriated tungsten wire 44 carburized at its outer surface layer 45 as by, for example, passing hydrogen gas saturated at room temperature with xylene vapor over the heated (~1700° C.) thoriated tungsten substrate wire. Carburization is complete at the point in time when the total resistivity of the wire has changed by 10% of its initial value. The grain oriented overlay 42 is deposited directly over the carburized substrate layer 45 to a depth of, for example 0.0001" to 0.001" by the method of chemical vapor deposition.

The surface 43 of the vapor deposited layer 42 is smoothed such as by, for example, electropolishing as described below, to remove surface irregularities and to expose the uniformly grain oriented emitting surface.

The emitter is activated as by, for example, directly heating the emitter wire by passing electrical current therethrough. The temperature of the emitter during activation can be near its typical operating temperature such as, for example, 1600° C. to 1650° C. The activation time (for the above example ~120 minutes) should be sufficient to cause enough thorium to diffuse to and over the surface such that surface coverage is adequate to yield emission from the emitter typical of that from a single crystal face of tungsten with a monoatomic layer of thorium over its surface.

In operation, at the typical operating temperature of 1600° C. to 1650° C., thorium is desorbed at the surface but is continuously replenished by diffusion of thorium from the thoriated tungsten substrate through the grain boundaries of the grain oriented layer 42 to continuously provide a nearly monoatomic layer of thorium at the surface. The monoatomic surface coverage of thorium lowers the work function of the emitting surface 43 of the layer 42 to, for example, 3.0 ev. in the same manner as any typical electropositive adsorbed surface layer.

The term "emitting surface" as used herein shall be deemed to be the emitter surface from which electron emission issues exclusive of adsorbed thin films on order of a few atoms or molecules thick.

Greatly enhanced emission is realized from the aforementioned thoriated tungsten emitter of FIG. 11. More specifically a 400% increase in emission was obtained from an emitter of FIG. 11 with a (100) crystallographic plane of tungsten constituting the emitting surface as compared to an identical emitter, at the same temperature, except that the latter emitter had a typical patchy emitting surface. By deposition of the (111) crystallographic plane, as opposed to the (100) plane constituting the emitting surface, a 1000% or greater increase in emission is obtainable over that of the patchy emitter.

Referring now to FIGS. 12 and 13 there are shown two alternative dispenser cathode embodiments utilizing the surface uniformity feature of the parent invention. In addition, as in the previous embodiment of FIG. 11, these dispenser thermionic emiters also employ the porosity feature of the grain oriented layer permitting low work function materials such as barium, thorium, etc., to be stored within the emitter body and to diffuse through the grain boundaries of the deposited layer to supply a continuous monoatomic or monomolecular coating of low work function material to the polycrystalline emitter surface constituted of grain oriented crystallites.

The thermionic dispenser emitter structure of FIG. 12 includes, a tube 51 of refractory metal as of molybdenum closed at one end by a porous refractory metal disk 52 or matrix as of sintered tungsten or nickel impregnated with a fused mixture of barium oxide and aluminum oxide in a 5:2 mol. ratio. The fused mixture completely or partialy fills all voids and interstices of the porous disk 52 which are accessible from the exterior of the disk 52.

A heater 53 is mounted within the tube for heating the cathode. In order to reduce evaporation of the alkaline earth metal and its diffusion into the molybdenum tube 51 the underside 54 and sides 55 are lapped to close the pores prior to impregnation of the disk 52 with the alkaline-earth metal composition.

The porous body 52 is machined at its outer surface 56 to provide a surface conforming to the shape of the desired emitting surface. In some cases, as in a Pierce gun, this surface is spherically concave. In other cases, the surface 56 is flat.

A grain oriented layer 57 of a high melting point material and preferably a refractory metal is deposited, as by chemical vapor deposition, on the surface 56. The columnar crystallites or grains of the deposited layer 57 are preferably oriented normal to the surface 56 and deposited, as described more fully below, such that a certain preferred crystallographic plane is disposed normal to the columns which is tantamount to being in the emitting surface. In this manner the emitting surface is uniformly constituted of the preferred crystal plane. The surface layer 57 is of any suitable thickness as of, for example 0.0001"–0.001".

After depositing the layer 57 it is preferably polished by any suitable means and preferably electropolished, as described below, to expose uniformly the oriented crystallites. The porous impregnated body 52 with the deposited layer 57 is mounted within the tube 51 as by welding and mounted in an evacuated envelope. After degassing the envelope, the cathode is activated by operating the emitter at a temperature somewhat higher than normal operating temperature, e.g., 1000° C. to 1200° C. until the cathode emits satisfactorily.

In operation, the impregnate alkaline earth composition, at elevated operating temperature, reacts with the refractory metal, principally in a manner productive of free alkaline earth metal. The alkaline earth metal diffuses out of the porous refractory matrix to the surface of the deposited layer through the oriented grain boundaries of the deposited layer 57. At the emitting surface of the polycrystalline grain oriented layer 57 the alkaline metal diffuses over the surface of the layer 57 to supply a layer of alkaline earth metal substantially one molecule thick on the surface.

Instead of machining the body in the manner described above, the body may be impregnated with a filler metal, swaged, or rolled and drawn to a reduced diameter in order to produce filaments which may be processed into cathodes. Likewise the body of refractory metal may be formed by extrusion and impregnated with filler metal or powdered refractory metal may be mixed with powdered filler metal and the body pressed and sintered.

As impregnant materials those which are capable of reacting with the refractory metal principally in a manner

productive of free alkaline earth metal are particularly suitable. As refractory metals, tungsten is preferred but molybdenum, tantalum, niobium and rhenium among others, may be used. In the case of tungsten, certain alkaline earth compounds, notably the nitrates react therewith to form tungstates, with a consequent diminution of the amount of free alkaline earth metal being made available in the free state. It is probable that similar reactions occur with the other refractory metals and for that reason we prefer to use no nitrates of the alkaline earth metals.

The porous refractory metal body **52** may be impregnated by a number of different methods using a number of different materials as described in the following U.S. Patents: 2,700,000, 2,700,118, 2,716,716, 2,769,708, 2,813,807, 2,848,644, and 2,929,133.

Such impregnants include, mixtures of alkaline earth metal azides and/or hydrides with a compound selected from formates and carbonates, mixtures of alkaline earth metal tungstate and a reducing metal selected from the group of thorium, zirconium, and tantalum, and other mixtures.

Referring now to FIG. 13 there is shown an alternative dispenser emitter embodiment. In this embodiment the emitters are substantially the same as described with respect to FIG. 12 and like numerals have been applied to identical elements. In this instance the grain oriented overlay **57** is deposited upon a porous refractory metal disk **61** as of sintered powdered tungsten which closes off a cavity **62** containing an alkaline earth composition and forming a reservoir of low work function materials. Suitable compositions include materials which are capable of reacting with the refractory metal disk **61** principally in a manner productive of low work function free alkaline earth metal.

The low work function material such as, for example, barium or thorium diffuses through the porous disk **61** and thence through the overlay **57** to the emitting surface. At the emitting surface the low work function metal replenishes the desorbed low work function metal to maintain a uniform low work function emission surface.

It should be noted that all crystallographic planes do not uniformly adsorb the thin film. The adsorption mechanism is dependent upon the atomic spacings in the exposed surface, both directly, since they affect the packing of the adsorbed atoms, and indirectly on account of the value of the work function. Thus cesium is adsorbed preferentially on the highest work function faces of tungsten, the (112) and the (110) faces, since the indirect effect is the greater, whereas barium and thorium are absorbed preferentially on the (111) face, which has the lowest work function, because with them the direct effect is the greater.

In summary it has been shown that the emission characteristics of thermionic emitters, in general, will be improved by forming the emitting surface of a polycrystalline grain oriented material constituting the emitting surface. The grain oriented material may, in general, consist of any one of a number of different high melting point materials including elements and compounds.

Suitable high melting point elements include the refractories such as tungsten, molybdenum, tantalum, niobium and rhenium. Other suitable high melting point elements includes carbon, hafnium, iridium, osmium, platinum, rhodium, ruthenium, thorium, titanium, vanadium, ytterbium, and zirconium.

What is claimed is:

1. A thermionic emitter structure adapted for operation at elevated temperatures for emitting a stream of electrons, said emitter structure having an emitting surface for emitting the stream of electrons and being formed by a layer of grain oriented polycrystalline material, means forming a source supplying a layer of coating material to said polycrystalline emitting surface, said layer of material having a lower work function than the bare emitting surface whereby the work function of said coated surface is lowered uniformly, and said layer of low work function material being depleted in use and being replenished in use by diffusion from said source through said polycrystalline emitting surface.

2. The apparatus according to claim **1** including, a porous polycrystalline metallic substrate member and said polycrystalline grain oriented layer being disposed as an overlay upon said substrate member.

3. The apparatus according to claim **2** wherein said source of low work function coating material is formed in said porous structure of said substrate member.

4. The apparatus according to claim **1** wherein said source of low work function coating material is a reservoir disposed on the remote side of said grain oriented layer from said emitting surface portion thereof.

5. The apparatus according to claim **2** wherein said substrate member is thoriated tungsten and said coating material is thorium.

6. The apparatus according to claim **5** wherein said emitting surface is formed by the (111) crystallographic plane of tungsten.

7. A thermionic emitter including, a structure of high melting point material adapted to operate at elevated temperatures, said structure having a surface portion adapted to act as an electron emissive surface, said emissive surface being constituted of the exposed ends of an ensemble of columnar crystals, a preponderance of said columnar crystals being directed approximately normal to said emissive surface, means forming a source for supplying a film of electropositive material to said emissive surface to lower the work function of said emissive surface, and said film of low work function material being desorted in use and being replenished in use by diffusion from said source through said emissive surface.

8. An electron discharge device including, a thermionic emitter structure adapted for operation at elevated temperatures for emitting a stream of electrons, a collector electrode spaced from said emitter structure for collecting electrons from the electron stream, said emitter structure having an emitting surface for emitting the stream of electrons and being formed by a layer of grain oriented polycrystalline material, means forming a source for supplying a film of electropositive coating material to said polycrystalline emitting surface for lowering the work function of said emitting surface, and said film being desorbed in use and being replenished in use by diffusion from said source through said polycrystalline emitting surface.

9. The apparatus according to claim **8** including, a porous polycrystalline metallic substrate member and said polycrystalline grain oriented layer being disposed as an overlay upon said substrate member.

References Cited by the Examiner

UNITED STATES PATENTS

1,826,514	10/1931	Gero et al.	313—346
2,750,527	6/1956	Katz	313—346
2,808,531	10/1957	Katz et al.	313—346
3,134,924	5/1964	Henderson et al.	313—346
3,155,864	11/1964	Coppola	313—346

JOHN W. HUCKERT, *Primary Examiner.*

A. J. JAMES, *Assistant Examiner.*