June 28, 1966 T. S. CONIGLIARO 3,258,564

AUTOMATIC THERMAL CUTOUT FOR USE WITH MAIL BOX INDICATOR AND DOOR SIGNAL

Original Filed July 17, 1962 2 Sheets-Sheet 1

Fig. 1

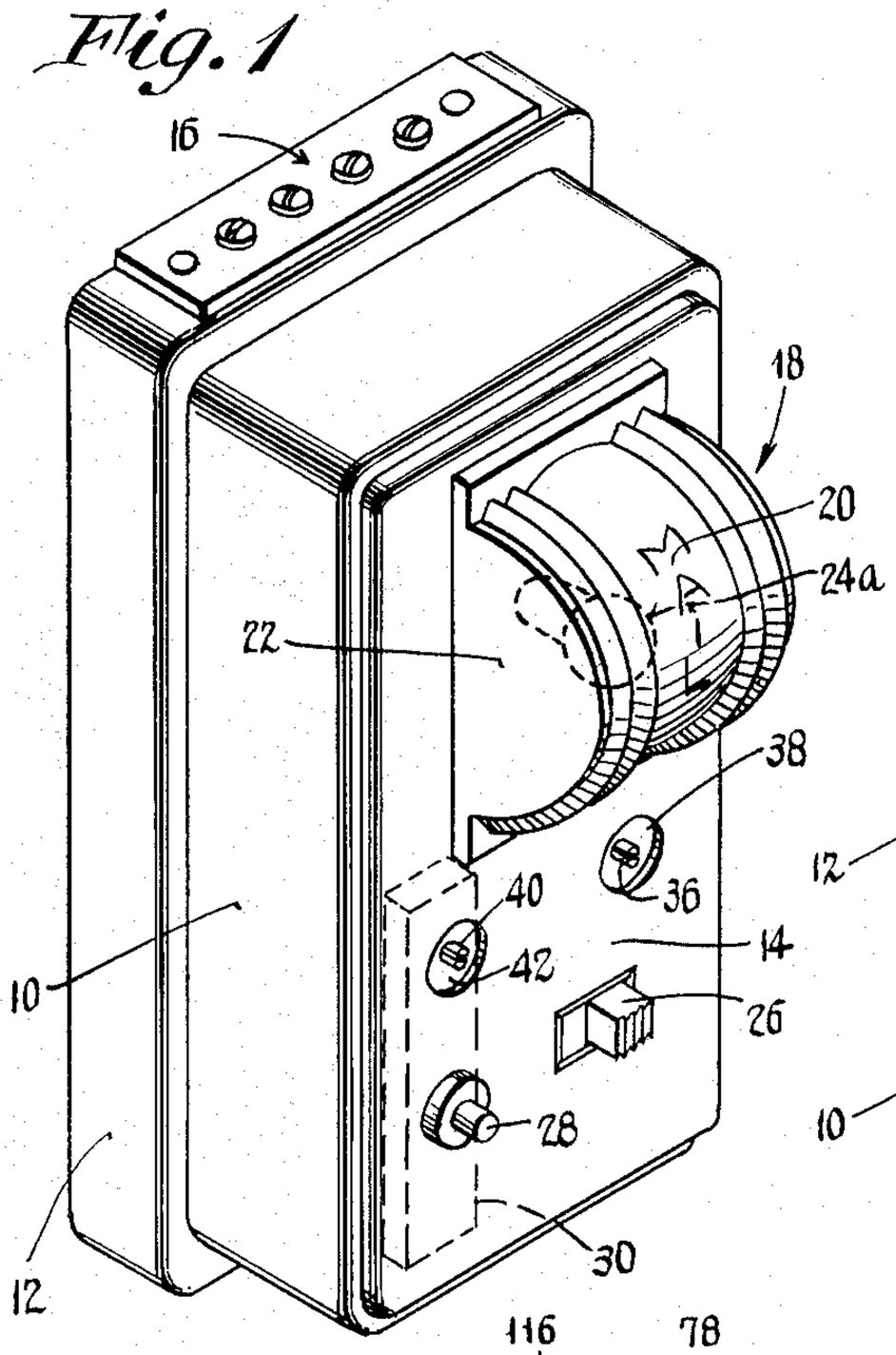

Fig. 2

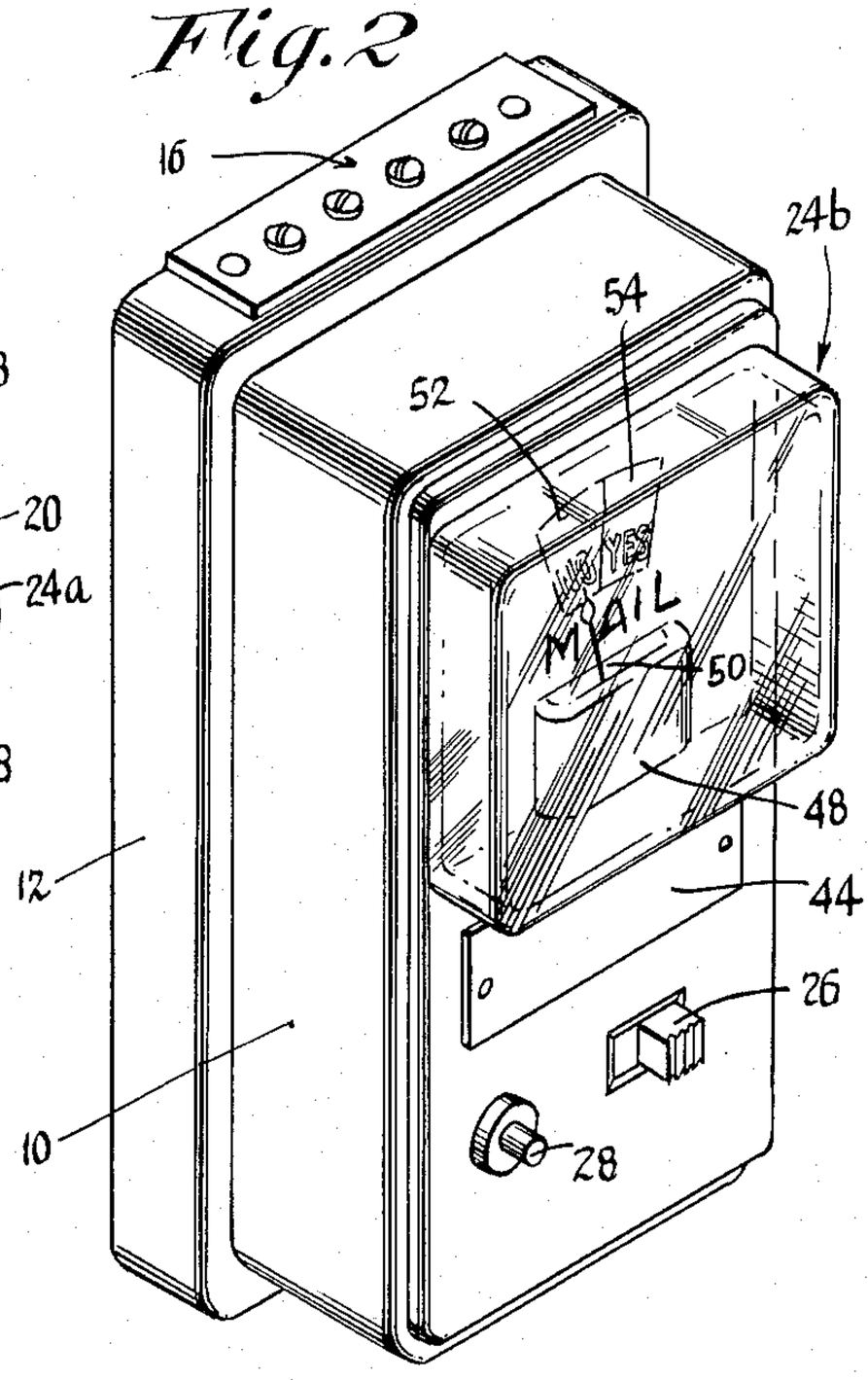

Fig. 3

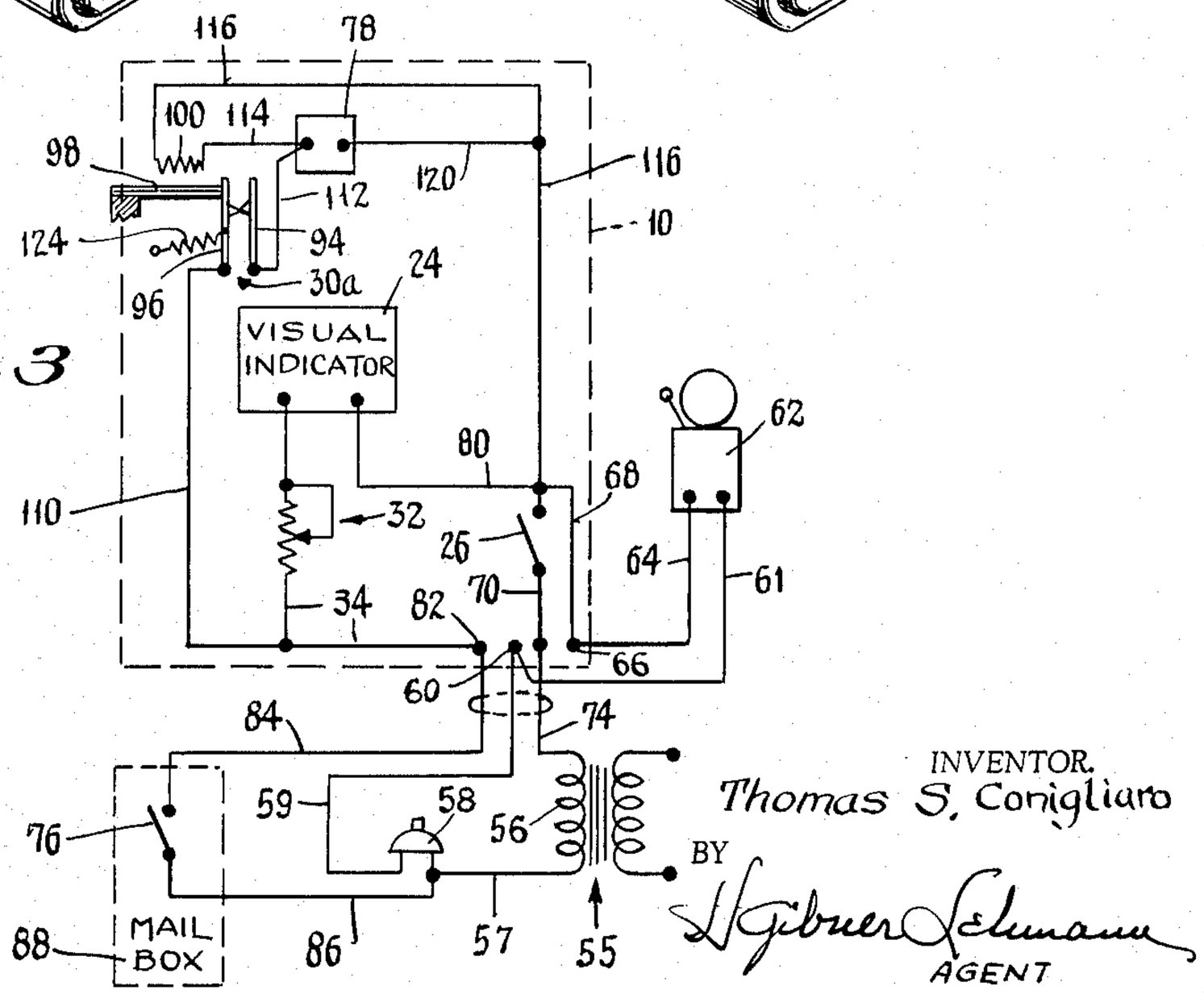

INVENTOR.
Thomas S. Conigliaro
BY
Hubner & Lehmann
AGENT

June 28, 1966 T. S. CONIGLIARO 3,258,564

AUTOMATIC THERMAL CUTOUT FOR USE WITH MAIL BOX INDICATOR AND DOOR SIGNAL

Original Filed July 17, 1962 2 Sheets-Sheet 2

Fig. 4

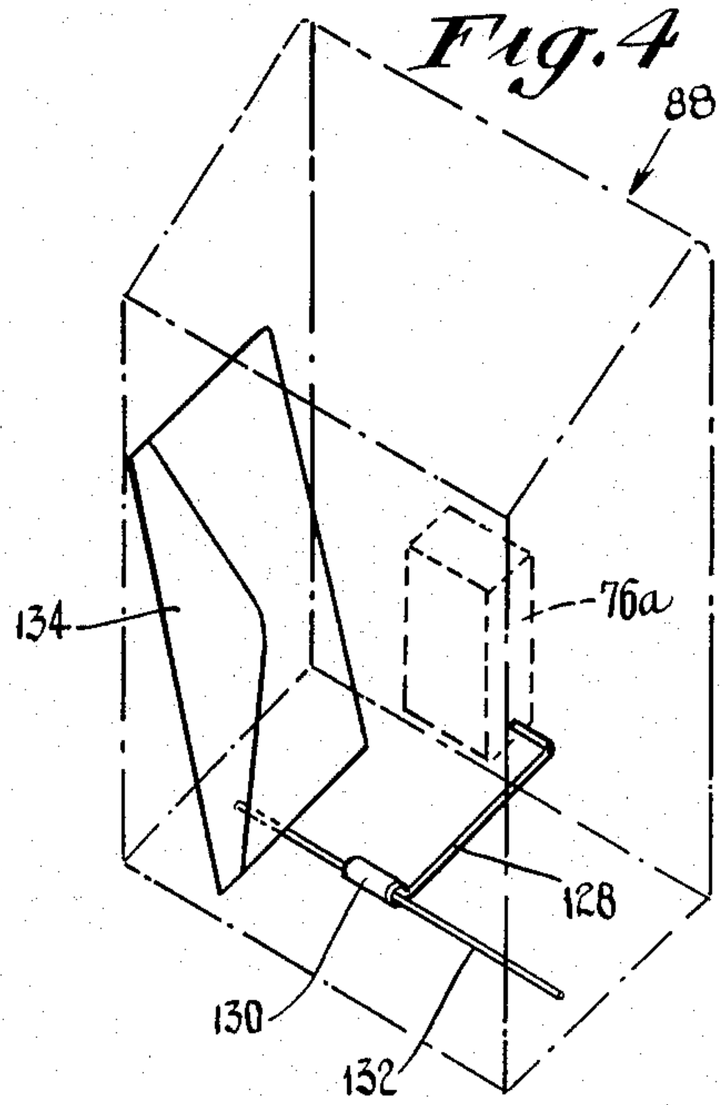

Fig. 5

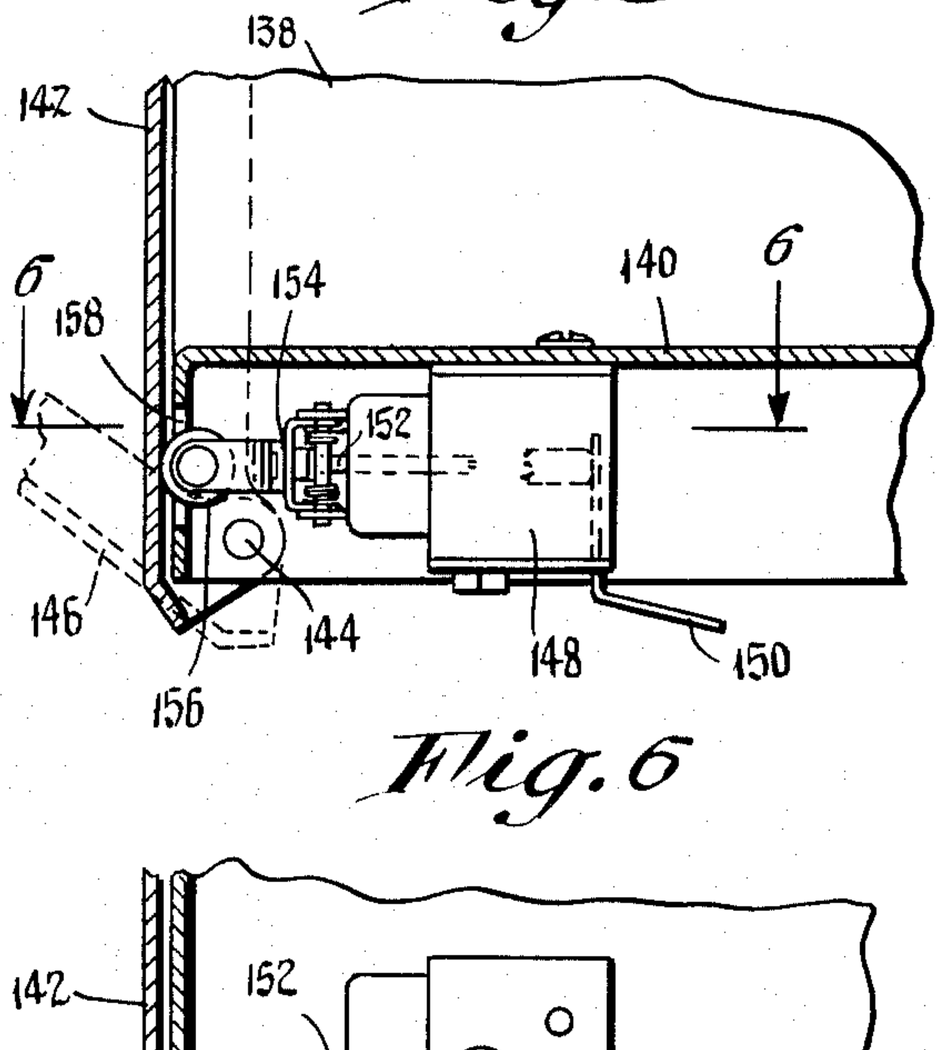

Fig. 6

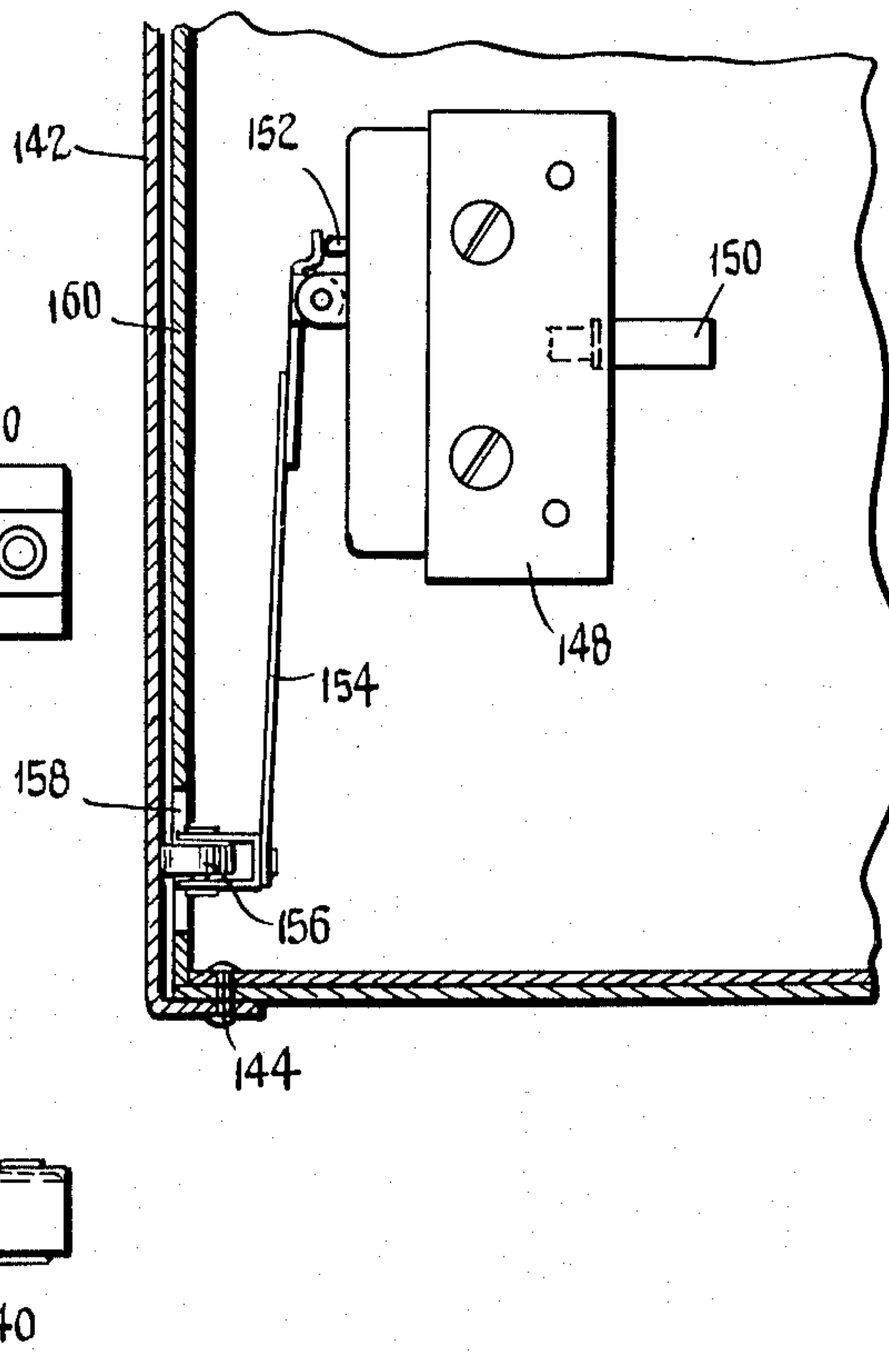

Fig. 7

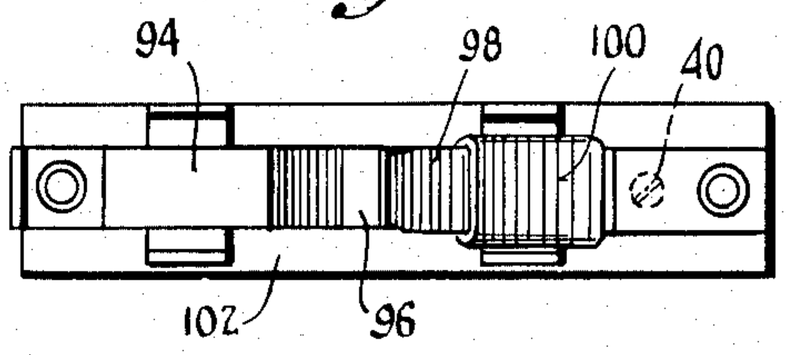

Fig. 8

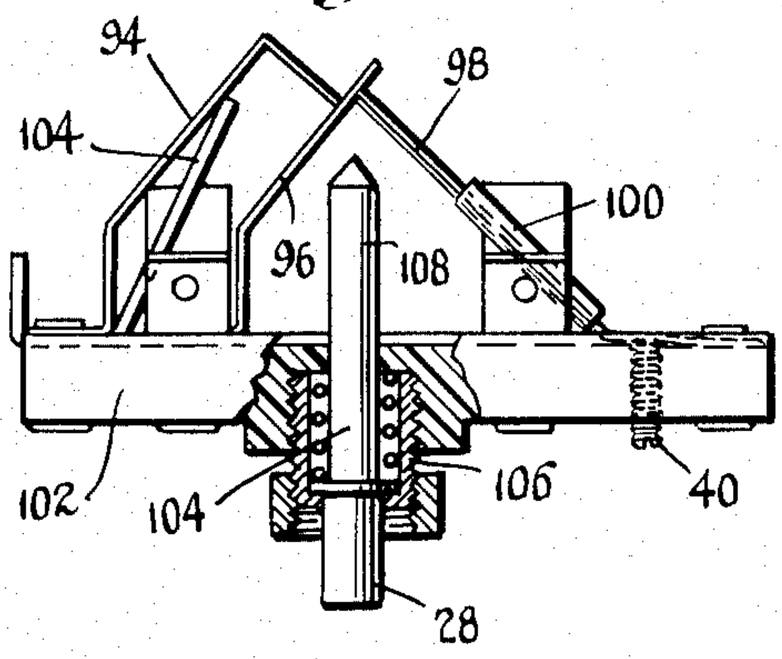

INVENTOR.
Thomas S. Conigliaro
BY
Hgébner Lehmann
AGENT

United States Patent Office

3,258,564

Patented June 28, 1966

3,258,564

AUTOMATIC THERMAL CUTOUT FOR USE WITH MAIL BOX INDICATOR AND DOOR SIGNAL

Thomas S. Conigliaro, Bridgeport, Conn., assignor of one-half to Nicholas Conigliaro, Carbondale, Pa.

Original application July 17, 1962, Ser. No. 210,424, now Patent No. 3,150,361, dated Sept. 22, 1964. Divided and this application Aug. 5, 1964, Ser. No. 387,751

4 Claims. (Cl. 200—116)

The present application is a division of my application Serial No. 210,424, filed July 17, 1962, and entitled, "Mail Indicator and Door Signal."

This invention relates to signal and indicator systems, and more particularly to systems of this type which incorporate door or entrance signals and mail box indicators.

The invention concerns improvements in the signal and indicator systems of my copending application Serial No. 137,766, filed September 13, 1961, and entitled, "Combined Door Signal and Mail Indicator System," and of my Patent No. 3,008,132, issued November 7, 1961, entitled, "Mail Indicator Device," and Patent No. 3,008,133, issued November 7, 1961, entitled "Combined Door Signal and Mail Indicator Device."

An object of the invention is to provide a novel and improved door signal and mail indicator system which effects both visual and temporary audible indications as to the presence of mail in the mail box, utilizing the fewer possible components and also utilizing a simplified circuit whereby the manufacturing cost is held to a minimum.

Another object of the invention is to provide an improved signal and indicator system as above, which is reliable in operation and not likely to get out of order, thereby requiring a minimum amount of servicing and maintenance.

An additional object of the invention is to provide a simple and improved automatic electric cut-out for use with an indicator system as above characterized, to enable a momentary audible signal to be had when mail is deposited in the mail box.

Another object of the invention is to provide a novel unitary mail indicator instrument and door signal accessory which is small and compact, attractive and easily operated, with the necessary manual controls and visual signal conveniently disposed at the casing front where it is readily accessible for viewing and adjustment.

Other features and advantages will hereinafter appear.

In the drawing accompanying this specification, similar characters of reference are used to designate like components throughout the several views, in which:

FIG. 1 is a front perspective view of a unitary mail indicator instrument illustrating one embodiment of the invention.

FIG. 2 is a front perspective view of another unitary mail indicator instrument made in accordance with the invention, illustrating another embodiment thereof.

FIG. 3 is a schematic circuit diagram of the improved door signal and mail indicator device.

FIG. 4 is a diagrammatic representation of a mail box having incorporated in it a simplified mail-actuated switch mechanism as provided by the invention.

FIG. 5 is a fragmentary vertical sectional view of another type of mail box, that commonly used for rural delivery, having incorporated therein a simplified mail-actuated switch means as provided by the invention.

FIG. 6 is a fragmentary horizontal section taken on the line 6—6 of FIG. 5.

FIG. 7 is a top plan view of a novel electric circuit cut-out device for effecting a temporary operation of the

audible signal of the indicator means, as provided by the invention.

FIG. 8 is a view partly in side elevation and partly in section, of the electric cut-out device of FIG. 7.

Considering first FIG. 1, the unitary mail indicating instrument and door signal accessory shown therein comprises a generally rectangular open-backed casing member **10** having a mounting or base edge portion **12**, and having a front wall or panel **14**. Terminals **16** are disposed at the top of the base portion **12** for connection with the door signal, signal lines, a source of supply and a mail-operated switch, all to be described. Referring to FIG. 3, the casing **10** is indicated diagrammatically by the broken rectangular outline which has been given the same number.

Disposed on the front panel **14** is a visual indicator device comprising a curved globe or lens **18** having a convex front face **20** and flat sides **22**. On the face **20** the word "MAIL" may be provided, as shown. Within the lens **18** is an incandescent electric lamp **24***a* of small voltage and power rating, such lamp being designated diagrammatically by a broken outline. In FIG. 3, the lamp **24***a* may be considered as constituting the visual indicator shown by the box **24**.

The front panel **14** also mounts an on-off switch **26**, and additionally a reset button **28** which constitutes a portion of an electric cut-out device indicated generally by the broken outline **30** in FIG. 1. In FIG. 3 the electric cut-out device is shown diagrammatically, and the diagrammatic showing is given the numeral **30***a*.

In series with the visual indicator **24** (see FIG. 1) is a rheostat **32**, such rheostat being inserted in a lead wire **34** connected with the indicator. The rheostat **32** has a shaft **36** which is accessible through an opening **38** in the front panel **14**. Similarly, the electric cut-out device **30***a* has an adjusting screw **40** which is accessible through an opening **42** in the front panel **14**.

A name plate **44** may be affixed to the front panel **14** to cover the openings **38** and **42** and the adjustment screws **36** and **40**, this being shown by way of example in the instrument illustrated in FIG. 2. The instrument of this figure is generally similar to that of FIG. 1 with the exception that the visual indicator designated **24***b*, is in the form of an electric meter having a deflecting coil **48** and a pointer **50**, the latter being movable over a scale having two colored zones **52** and **54** labelled respectively "NO" and "YES," and having the word "MAIL" in large printing. The instrument movement **24***b* thus is an alternative for the incandescent lamp **24***a* and the lens **18**. Both the incandescent lamp **24***a* and the instrument movement **24***b* constitute visual indicators to reveal the presence of mail as effected by the indicator system, as will be shortly described.

Referring now to the circuit diagram of FIG. 3, the indicator system is shown as operating from a source of current such as a conventional door bell or door chime transformer **55** having a secondary coil **56** connected by a lead **57** to the conventional front door push button **58**. The push button **58** is connected by a lead **59** to a terminal **60** of the unit instrument, which terminal is in turn connected by a lead **61** to the door bell **62** (or chimes) of the dwelling or building. The bell **62** is connected by a wire **64** to a terminal **66** of the instrument, from which a wire **68** goes to the on-off switch **26**, the latter being also connected by a wire **70** to a terminal **72**. From the terminal **72** a wire **74** connects to the remaining terminal of the transformer secondary coil **56**. By such organization, the door bell **62** will operate when the button **56** is depressed in the usual manner.

In accordance with the present invention, in conjunction with the current source and door bell system above set

forth there is provided a novel mail indicator device involving the visual indicator **24**, a mail box switch **76**, the electric cut-out **30***a*, and an audible signal device such as a buzzer **78**.

As shown in FIG. 3, the visual indicator **24** is connected by a wire **80** to the on-off switch **26**, and the wire **34** of the visual indicator is connected to a terminal **82** of the unit. From the terminal **82** a wire **84** leads to the mail-box switch **76**, and from such switch a wire **86** connects with the wire **52** of the transformer secondary **50**.

The mail-box switch **76** may comprise a miniature snap switch of the type well known in the electrical art. Such a switch is indicated by the broken outline **76***a*, shown in FIG. 4, where it is mounted on the rear wall of an upright type mail box, the latter being diagrammatically illustrated by a simple outline, designated **88**.

Considering again FIG. 3, the electric cut-out **30***a* is of the thermal-responsive type, comprising a pair of biased-apart switch blades **94** and **96** (see also FIGS. 7 and 8) which are normally held in engagement with each other by a bimetallic arm **98**, said arm being influenced by a heater coil **100**.

The switch blades **94** and **96** are disposed in parallel relation with each other, and are carried by an elongated rectangular insulating base **102**, being secured thereto by suitable rivets as shown. Interposed between the switch arms **94** and **96** is a rigid stop arm **104** arranged to engage the switch arm **94** and constitute a stop therefor, which prevents the arm **94** from following the cooperable arm **96** when the latter is released. The bimetallic arm **98** is also carried at one end by the base **102**, and at its other or free end abuts the switch blade **96** as seen in FIG. 8. Upon the heater **100** becoming energized and being heated, it will impart heat to the bimetallic arm **98**, flexing the latter in a clockwise direction as viewed in FIG. 8 to cause it to disengage the switch blade **96**. Upon this occurring, the switch blade **96** will also shift clockwise, separating from the switch blade **94** and opening the circuit.

A reset plunger **104** is reciprocable in a mounting bushing **106** carried by the base **102**, said plunger having the button **28** and also comprising an inner end **108** which is engageable with the switch blade **96** to manually restore the latter to engagement with the switch blade **94**. When such resetting is effected by actuation of the plunger **104**, the bimetallic arm **98** will again return to the FIG. 8 position, presuming that it has become sufficiently cool to do this.

Considering again FIG. 3, the switch blade **96** is connected by a wire **110** to the wire **34**, and the blade **94** is connected by a wire **112** to one terminal of the audible signal **78**. The said signal terminal is also connected by a wire **114** to the heater **100**, which is in turn connected by a wire **116** to the on-off switch **26**. The remaining terminal of the audible signal **78** is connected by a wire **120** to the wire **116**. In FIG. 3 the bias normally experienced by the resilient switch blade **96** is illustrated diagrammatically by means of a coil spring **124**.

The audible signal **78** is thus seen to be bridged by the heater **100**, both of these receiving energy through the switch blades **94, 96**.

In accordance with the invention, by making the audible signal **78** in the form of a well-known make-and-break device such as a buzzer, a more effective heating and energization of the heater **100** is obtained for several reasons. For one thing, when the circuit through the coils of the buzzer **78** is being repeatedly broken, the heater **100** will receive virtually full energy from the transformer **48**. For another thing, upon the buzzer armature breaking the circuit, an induced voltage will occur in the coils of the buzzer, and such voltage, through the arc occurring at the armature contacts of the buzzer, will also tend to energize the heater **100** with voltage spikes during certain like-polarized portions of the cycle of the energizing current. These voltage spikes and the spark discharge produce, as is well known, radio interference signals in the air, and the parallel-connected heater effects a damping of the spark and signals, to reduce radio and television picture interference. Also, any open-circuit failure of the parallel connected heater **100** will not interfere with operation of the audible signal **78**.

The buzzer **78** may be mounted in any convenient place, within the casing **10**, as for example on the bottom wall thereof.

The foregoing completes the connections of the present improved signal and indicator system.

Operation is as follows: As already mentioned, when the push button **54** is depressed, it will result in the door bell **62** becoming energized in the usual manner.

When mail is deposited in the mail box **88** it will effect a closing of the mail-operated switch **76**, and this will cause energization of the visual indicator **24**, which may be either the incandescent lamp **24***a*, see FIG. 1, or the electrical meter type movement **24***b*, see FIG. 2. Thus a visual indication is given of the presence of the mail in the box **88**. Also at the same time an audible indication is given of the presence of mail by virtue of the buzzer **78** being energized through the switch contacts **94, 96**. Simultaneously the heater **100** will be energized, and this will heat and flex the bimetallic arm **98**. Upon the bimetallic arm being sufficiently flexed, it will separate from the switch blade **96** enabling the latter to shift away from the blade **94**, thereby opening the circuit through the audible signal **78**. Upon the user removing the mail from the box **88**, the switch **76** will again open. Thereafter, the heat responsive switch **94, 96** is manually reset by actuation of the plunger **104** in the manner already described above. The system is then in readiness for the next mail delivery.

The time interval during which the buzzer **78** sounds may be varied by adjusting or turning the adjusting screw **40** in the base **102**, see FIG. 8, which alters the cold position of the bimetallic arm **98**.

Considering now the details of the mail-operated switch means as provided by the invention and referring to FIG. 4, there is illustrated a switch actuator arm **128** in the form of a slender wire having its free end bent at right angles and carrying a light metal sleeve **130** through which a slender cross piece or cross arm **132** passes. The sleeve **130** secures the cross arm **132** rigidly to the actuator arm **128**, and when mail (such as the envelope **134** shown in FIG. 4) is deposited in the mail box **88** the weight of the mail will push downward the arms **132** and **128**, closing the switch **76**.

By the use of suitable switch units and actuator arms, a weight of as little of one ounce or less will be sufficient to actuate the switch and close the circuit, for the purpose of effecting an indication of the presence of mail.

Another embodiment of the invention, comprising a novel and improved switch mechanism for a rural-type mail box, is illustrated in FIGS. 5 and 6. In these figures, the body of the mail box is indicated at **138**. The mail box has a bottom wall **140** and a hingedly-mounted front door **142** carried by pivot rivets **144**. In FIG. 5 the door **142** is shown in the closed position, the open position being indicated by the dotted outline **146**. Mounted on the underside of the bottom wall **140** of the mail box is a miniature type non-biased electric snap switch **148** having a reset lever **150** by which it may be shifted to the open position after being once closed. The switch **148** has a plunger operator **152** which is actuated by a slender lever **154**, the latter carrying a roller **156** disposed in an opening **158** of a depending flange **160** constituted as an integral part of the bottom wall **140** of the mail box. Normally, as shown in FIGS. 5 and 6, the front door **142** of the mail box holds the lever **154** in a retracted position wherein the switch **148** is open-circuited. However, when the front door **142** is operated to open the mail box for the purpose of placing mail therein, the lever **154** will swing clockwise as viewed in FIG. 6, closing the

circuit through the switch **148**. Even when the door **142** is again closed the switch **148** will remain in closed-circuit condition until such time as the user manually resets it to the open-circuit position by actuation of the reset lever **150**.

It will now be understood from the foregoing that I have provided a novel and improved, greatly simplified yet effective and reliable combination door signal and mail indicator device which has a number of desirable features. It provides both a visual and an audible indication as to the presence of mail, and the audible indication is automatically discontinued after a small predetermined elapse of time, starting with the closing of the mail actuator switch. The indicator system involves relatively few components, and is of flexible design whereby it may be utilized with existing mail boxes and door signal systems. Adjustment of the energization of the visual signal, and adjustment of the time interval of the audible signal, as well as resetting of the thermal cut-out may be easily effected from the front of the unit. The unit may also be rendered inoperative at will, by opening the on-off switch mounted on the front panel. The unit is small and compact, and constitutes an attractive adjunct for the home or office building.

Variations and modifications may be made within the scope of the claims, and portions of the improvement may be used without others.

I claim:

1. An electric cut-out mechanism comprising, in combination:

(a) a base,

(b) a pair of cooperable resilient switch blades having laterally movable end portions, said blades being mounted on the base and disposed substantially parallel to each other, one of said blades being biased away from the other,

(c) a bimetallic arm at one end carried by the base and extending substantially perpendicular to the switch blade, said arm at its free end being laterally movable and abutting said one blade adjacent the free end thereof for maintaining the blade engaged with said other blade, said one blade and said arm constituting an angular structure having a hollow which is spanned by the base,

(d) electric heater means disposed adjacent the bimetallic arm to effect a flexing of the same when the heater means is energized, thereby to disengage the arm from said one blade to enable separation of the latter from the other blade, and

(e) a manual reset plunger movably carried by the base and having a free portion extending from the base into said hollow of the angular structure, said free portion being engageable with the said one blade to move the latter against its bias, thereby to restore the engagement of the blades and abutment of the one blade by the bimetallic arm when the arm is cold, said plunger initially engaging said one blade at an acute angle and subjecting the blade to a camming action.

2. A cut-out mechanism as in claim **1**, wherein:

(a) the line of movement of the reset plunger makes an acute angle with said one blade and said bimetallic arm,

(b) said one blade, arm and plunger being disposed substantially in a common plane.

3. A cut-out mechanism as in claim **1**, wherein:

(a) the plunger has a finger-engageable end which is exposed at one surface of the base,

(b) means comprising an adjustment screw having one end exposed at said one surface of the base, for adjustably positioning said bimetallic arm.

4. A cut-out mechanism as in claim **1**, wherein:

(a) the plunger when being advanced closely approaches the cold position of the bimetallic arm and engages said one blade at a point adjacent said arm when the latter is cold.

References Cited by the Examiner

UNITED STATES PATENTS

1,336,652	4/1920	Ott	200—61.63
1,752,091	3/1930	Johnson	200—116
2,519,297	8/1950	Stump et al.	200—116
2,824,932	2/1958	Ellenberger	200—116
3,009,999	11/1961	Johnson	200—116
3,040,141	6/1962	Whilden et al.	200—61.63

FOREIGN PATENTS

513,143	10/1939	Great Britain.

BERNARD A. GILHEANY, *Primary Examiner.*

B. DOBECK, H. B. GILSON, *Assistant Examiners.*