March 15, 1966 W. J. DESY 3,240,297

CORNER CONSTRUCTION

Filed Dec. 30, 1963 2 Sheets-Sheet 1

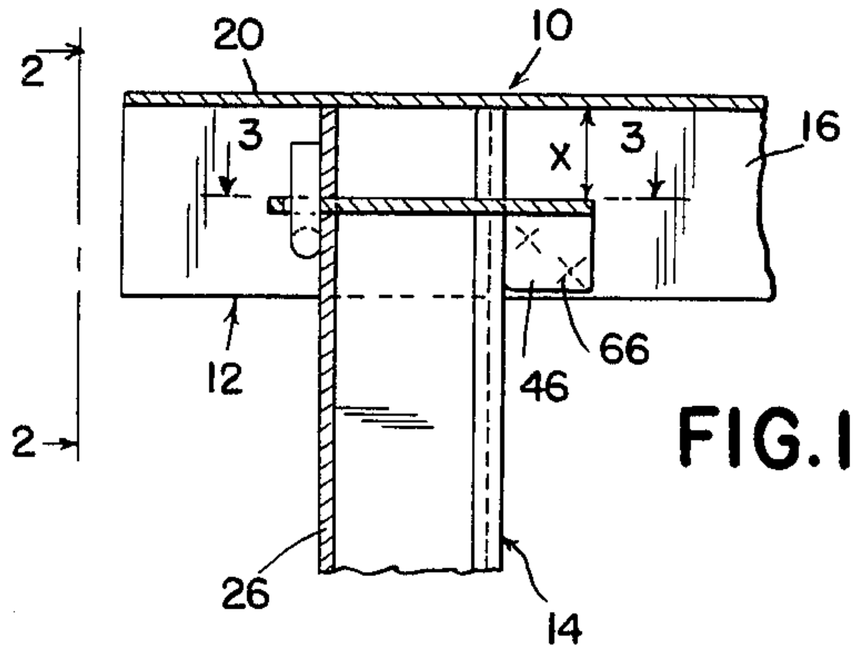

FIG. 1.

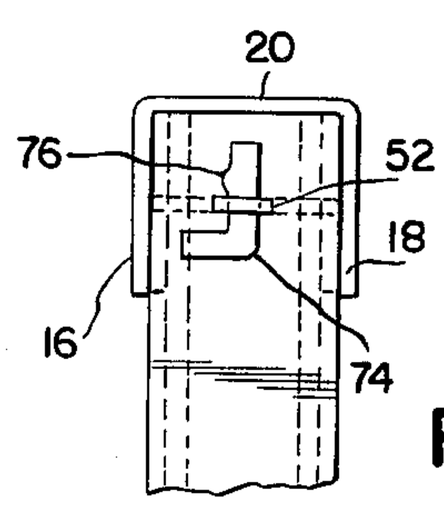

FIG. 2.

FIG. 4.

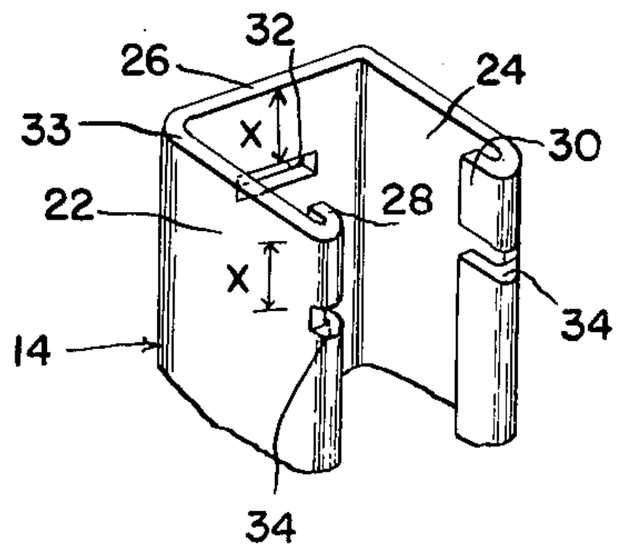

FIG. 3.

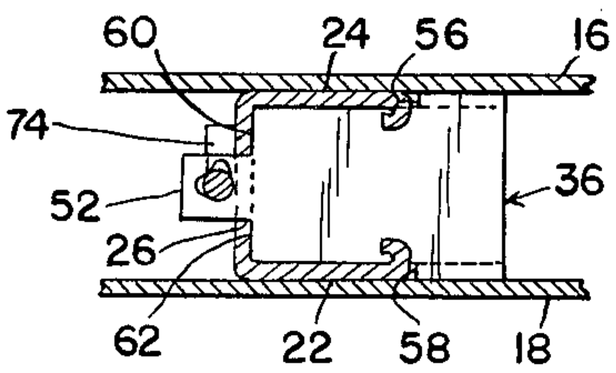

FIG. 5.

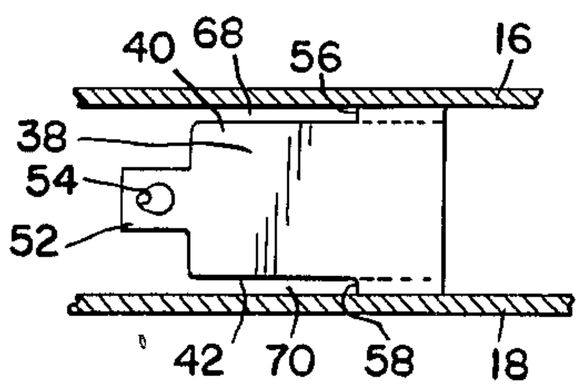

FIG. 6.

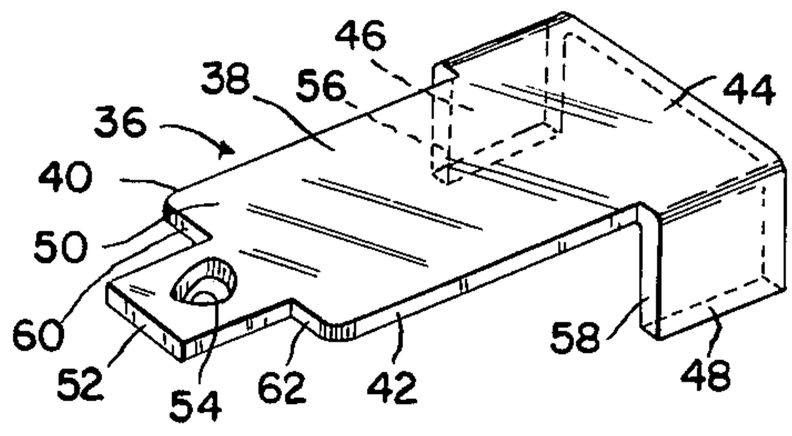

INVENTOR.
WILFRID J. DESY
BY Williamson, Hulbert & Bellknap
ATTORNEYS

March 15, 1966 W. J. DESY 3,240,297

CORNER CONSTRUCTION

Filed Dec. 30, 1963 2 Sheets-Sheet 2

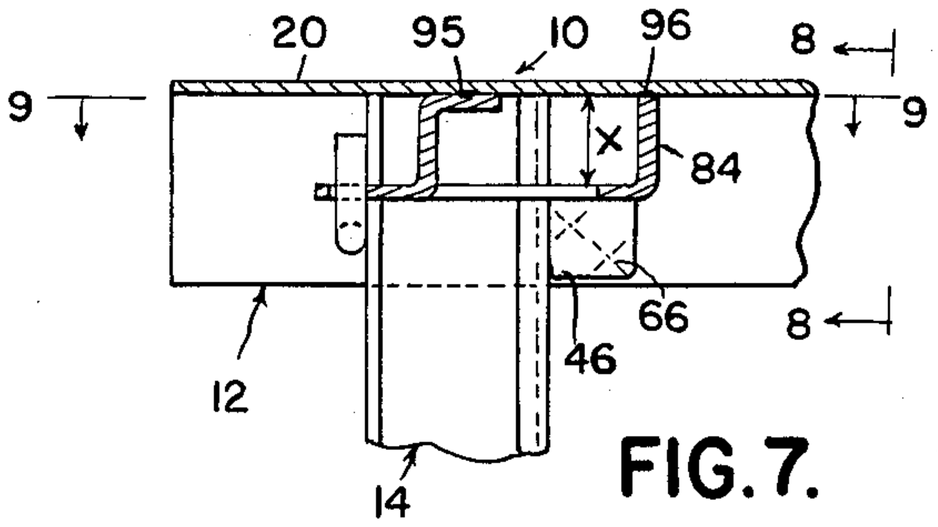

FIG. 7.

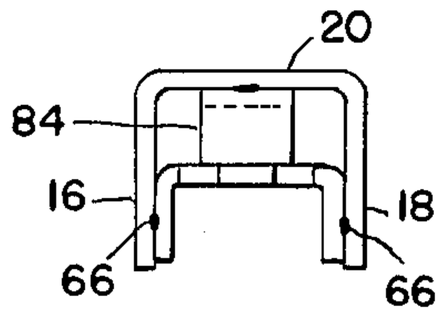

FIG. 8.

FIG. 10.

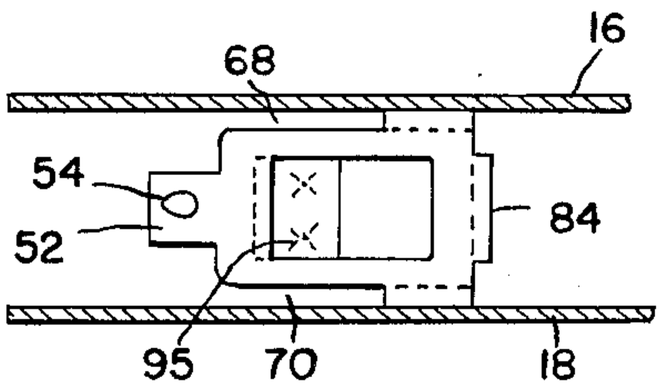

FIG. 9.

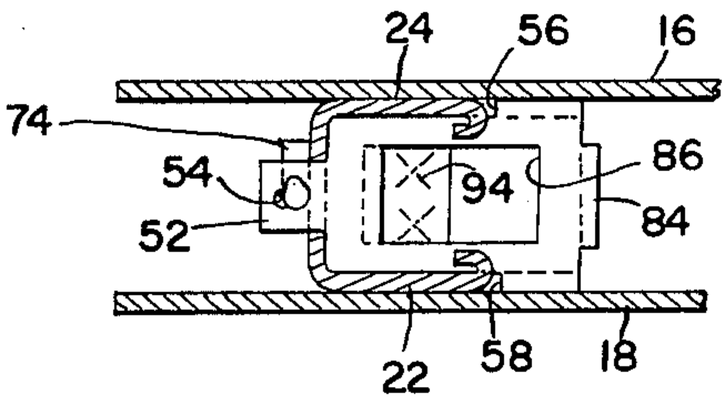

FIG. 11.

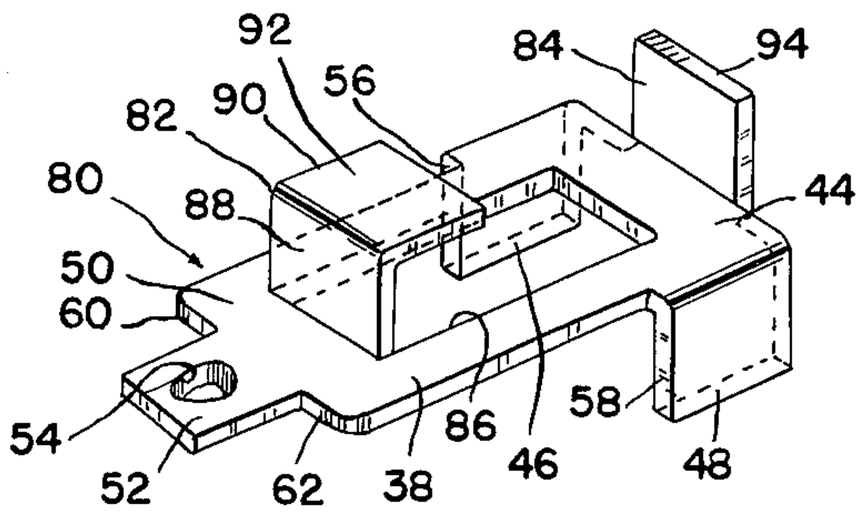

INVENTOR.
WILFRID J. DESY
BY Whittemore, Hulbert & Belknap
ATTORNEYS

United States Patent Office

3,240,297

Patented Mar. 15, 1966

3,240,297

CORNER CONSTRUCTION

Wilfrid J. Desy, 13918 Indiana Ave., Detroit 38, Mich.

Filed Dec. 30, 1963, Ser. No. 334,351
24 Claims. (Cl. 189—36)

This invention relates to improvements in building structures and more particularly to the frame therefor. The frame of the present invention is particularly adapted for use as part of a temporary or portable building structure which may be used in one location, then disassembled and then re-assembled at another location. The construction of the portable building structure is characterized by the fact that the entire assembly can be shipped or transported in a knock-down condition and later accurately and quickly assembled at the new site with a minimum of labor and time. As an example, the portable building structure of the present invention is particularly adapted for use by sportsmen including fishermen, bathers, hunters and campers and is also suitable to many industrial and domestic uses such as in the construction industry for tool sheds, outhouses or the like.

An object of the present invention is to provide a frame for a knock-down building structure, said frame incorporating a plurality of framing members incorporating novel and advantageous means for facilitating rapid assembly of such members, one to another, in an angularly adjusted relationship.

Another object of the present invention is to provide a structural frame connection comprising a pair of elongated channel members, each of the members including a web and a pair of side flanges, said members being of different sizes so that one of the members fits in the space between the side flanges of the other of the members, and a bracket carried by the other member between the side flanges thereof and arranged in a predetermined spaced relationship with respect to the corresponding web, said bracket including means cooperable with the other member for holding the members in a predetermined angular relationship.

Still another object of the present invention is to provide a structural frame connection of the aforementioned type wherein the bracket includes abutment means and a tab, and an opening provided in the web of the one member adjacent an end portion thereof, said tab being received in the opening with the abutment means in engagement with said one member to hold the members in a predetermined angular relationship.

A further object of the present invention is to provide a structure of the aforementioned type wherein the abutment means includes inner and outer abutments, said inner abutment being in engagement with the side flanges on said one member and the outer abutment in engagement with the web on the one member.

A still further object of the present invention is to provide a structure of the aforementioned type wherein the inner and outer abutments are spaced apart a distance approximately equal to the height of one of the side flanges on the one member.

Another object of the present invention is to provide a structure of the aforementioned type wherein the tab is provided with an opening for receiving a locking pin which prevents separation of said one member from the bracket.

Still another object of the present invention is to provide a structure of the aforementioned type wherein the bracket includes a pair of right angle flanges which are arranged in surface to surface contact with the side flanges of the other member and are secured thereto by welding, said right angle flanges extending in a direction away from the web on the other member.

A further object of the present invention is to provide a structure of the aforementioned type wherein one or more spacing tabs are provided on the bracket engageable with the web on the other member for spacing the bracket from the web on the other member a predetermined distance, said spacing tabs being welded to the web on the other member.

A further object of the present invention is to provide a structure of the aforementioned type wherein the end portion of the one member is in engagement with the web on the other member.

It is thus another object of this invention to provide a simplified low cost structure of the aforementioned type having certain advantages contributing to efficiency, reliability and long life as well as ease of maintenance.

Further objects and advantages of the present invention will be apparent from the following description, reference being had to the accompanying drawings wherein a preferred form of the present invention is clearly shown.

FIGURE 1 is a fragmentary elevational view of a joint or connection, partly in section, and rotated 90 degrees from its normal position of use and illustrating the manner in which a pair of angularly related channel members, forming part of the frame of a building structure, are connected.

FIGURE 2 is a fragmentary plan view of the structural connection looking in the direction of arrows **2—2** of FIGURE 1.

FIGURE 3 is a sectional view of the structural connection taken on the line **3—3** of FIGURE 1.

FIGURE 4 is a perspective view of the end portion of the channel member which fits between the side flanges of the other channel member.

FIGURE 5 is a sectional view taken on the line **3—3** of FIGURE 1 but with one channel member removed to illustrate the manner in which the bracket is carried by the other channel member.

FIGURE 6 is a perspective view of the bracket.

FIGURE 7 is a sectional view similar to FIGURE 1 showing an alternative construction of a structural connection, said connection being rotatable 90 degrees from its normal position of use.

FIGURE 8 is a bottom view of the structural connection looking in the direction of arrows **8—8** of FIGURE 7.

FIGURE 9 is a sectional view through the structural connection taken on the line **9—9** of FIGURE 7.

FIGURE 10 is a sectional view taken on the line **9—9** of FIGURE 7 but with one channel member removed to illustrate the manner in which the bracket is carried by the other channel member.

FIGURE 11 is a perspective view of the modified bracket utilized in FIGURES 7–10.

The present invention is primarily used in constructing the frame of a portable building structure. As an example, the structure may include a frame having four sides, a roof and a floor, with the usual doors and windows being provided therein depending on the particular application. The frame is adapted to carry metal panels or the like for enclosing the four sides of the building structure as is well known in the art.

As an example, each side of the frame includes a pair of vertically extending channel members which are interconnected by horizontally extending channel members which fit between the side flanges of the vertical members as will subsequently appear. The vertical members each carry a like number of mounting brackets, one bracket for each of the horizontally extending channel members to be connected thereto. The present invention relates to the manner in which vertical and horizontal channel members are connected by means of a novel, easily detachable, knock-down type of structural connection.

From the foregoing, it readily appears that the present invention has application to many types of structures wherein a frame is utilized. As an example, the present invention could be utilized in making corner constructions for doors, window and the like as will readily appear.

Referring now to FIGURE 1, a structural connection is designated by the numeral **10** and includes a pair of elongated angularly interconnected framing members made, as an example, from structural steel channels.

The structural connection **10** includes an elongated vertically extending channel member **12** and an elongated horizontally extending channel member **14**. The vertical channel member **12** is provided with a pair of side flanges **16** and **18** interconnected by a web **20**. The horizontal channel member **14** is provided with a pair of side flanges **22** and **24** which are interconnected by a web **26**. The non-connected ends of the side flanges **22** and **24** are provided throughout the entire length thereof with inwardly turned substantially U-shaped lips **28** and **30**.

One end portion of the horizontal channel member **14** is adapted to fit in the space between the side flanges **16** and **18** on the vertical extending channel member **12**. With such a construction the size of the channel member **14** is smaller than the size of the channel member **12**. The word "size" refers to the width of the channel members or in other words the spacing between the side flanges. The channel member **14** is provided with an elongated slot **32** which is located a distance "X" from the end surface **33** as best illustrated in FIGURE 4. The side flanges **22** and **24** including the lips **28** and **30** are provided with slots or openings **34** which are also spaced from the end surface **33** of the channel member a distance "X".

The vertically extending channel member **12** is adapted to carry an elongated bracket **36** which is best illustrated in FIGURE 6. The bracket **36** includes a main body portion **38** having longitudinally extending edges **40** and **42**. The inner end portion **44** of the main body portion **38** is provided at the longitudinal edges with a pair of right angle flanges **46** and **48**. The other end portion **50** of the main body portion **38** is provided with a centrally located tab **52** having an oblong opening **54** therein. The tab **52** and main body portion **38** are located in the same plane. The flanges **46** and **48** are provided with inner abutment surfaces **56** and **58** respectively while the outer end portion **50** is provided with abutment surfaces **60** and **62**. The abutment surfaces **56** and **58** are spaced from abutment surfaces **60** and **62** a distance approximately equal to the height of one of the side flanges **22** and **24**.

The bracket **36** is carried by the vertically extending member **12**, with the main body portion **38** being spaced a distance "X" from the web **20** as best illustrated in FIGURE 1. With such a construction the flanges **46** and **48** are arranged in surface to surface contact with the side flanges **16** and **18** of the channel member **12** respectively. The flanges **46** and **48**, which are arranged at 90° with respect to the main body portion **38**, extend in a direction away from the web **20** as best illustrated in FIGURE 1 and are secured to the side flanges **16** and **18** by welding as indicated by the numeral **66**. Referring now to FIGURE 5, it should be noted that the longitudinal edges **40** and **42** are spaced from the side flanges **16** and **18** a predetermined distance to form relatively narrow elongated spaces **68** and **70** which are closed on the inner or lower ends thereof by the inner abutment surfaces **56** and **58** respectively.

In assembling the channel members **12** and **14** in angularly located relationship, such as at 90° as illustrated, the horizontal member **14** is moved into the space between the vertical flanges **16** and **18** on the horizontal member **12** so as to clear the main body portion **38** of the bracket **36** and bring the end surface **33** of the channel member **14** into abutting engagement with the web **20** provided on the vertically extending channel member **12**.

The horizontal channel member **14** is then moved downwardly towards the bracket **36**, with the longitudinal edges **40** and **42** being engageable with the walls defining slots **34** provided in side flanges **22** and **24**. During the downward movement aforesaid, the side flanges **22** and **24** are moved into the elongated spaces **70** and **68** respectively until the bottom edge portions thereof abut the inner abutment surfaces **58** and **56** provided on the bracket **36** and the web **26** abuts the outer abutment surfaces **60** and **62** as best illustrated in FIGURE 3. At such time the tab **52** extends through the slot **32** provided in channel member **14** above the top surface of the web **26**. Later on, if desirable, a right angle locking key or pin **74** having a hump **76** thereon (FIGURE 2) is inserted through the oblong opening **54** and rotated 90° to help prevent accidental separation of the channel member **14** from the bracket **38**.

FIGURES 7–11 illustrate a modification of the structural connection shown in FIGURES 1–6. Where applicable the same numerical designations will be utilized to represent similar or identical parts. The vertical and horizontal channel members **12** and **14** are identical to the members utilized in the other embodiment. The only part which has been modified is the bracket, now designated by the numeral **80**. The bracket **80** includes the main body portion **38**, tab **52** having the oblong hole **54** provided therein, flanges **46** and **48** having inner abutment surfaces **56** and **58** thereon respectively and outer abutment surfaces **60** and **62** as provided in the bracket shown in FIGURE 6. The primary difference between the brackets **36** and **80** is that bracket **80** includes a pair of spacing or locating elements or tabs **82** and **84**. The tab **84** is integrally connected to the inner end **44** of the main body portion **38** and is arranged at a 90° angle with respect thereto. The spacing element or tab **82** is struck out from the main body portion **38** by a suitable stamping operation so as to leave an elongated slot or opening **86** in the main body portion **38**. The spacing element or tab **82** is integrally connected to the other end **50** of the main body portion **38** and includes a portion **88** which is located at 90° with respect to the main body portion **38**. The spacing element **82** includes another portion **90** which is located at 90° with respect to the other portion **88**. The portion **90** is provided with a surface **92** which is adapted to engage the inner surface of the web **20**. Spacing tab **84** has an end surface **94** which is also adapted to engage the inner surface of the web **20**. Surfaces **92** and **94** are located a distance "X" from the main body portion **38** as best illustrated in FIGURE 7. When the bracket **80** is mounted on the vertical channel member **12** the surfaces **92** and **94** thereof are brought into engagement with the web **20** and spot welded thereto as indicated by the numerals **95** and **96** respectively in FIGURE 7. The side flanges **46** and **48** are also spot welded to the side flanges **16** and **18** as in the other embodiment.

The advantage of the bracket **80** over the bracket **36** is that the spacing tabs **82** and **84** provided on the bracket **80** predeterminedly locates the main body portion of the bracket **80** in the exact location with respect to the web **20**. It will be appreciated that when the bracket **36** is utilized a scale or other guide means is necessary so as to space the main body portion **38** the distance "X" from the web **20**.

The horizontal channel member **14** is mounted on the bracket **80** in the same manner as in the other embodiment.

The drawings and the foregoing specification constitute a description of the improved corner construction in such full, clear, concise and exact terms as to enable any person skilled in the art to practice the invention, the scope of which is indicated by the appended claims.

What I claim as my invention is:

1. A structural connection comprising a pair of elongated members, each of said members including a web and a pair of side flanges, said members being of dif-

ferent sizes so that an end of one of said members fits in the space between the side flanges of the other of said members, an opening in the web of said one member spaced from the terminal end surface of the aforementioned end on said one member, and a bracket connected to and located between the side flanges of said other member and arranged in a predetermined spaced relationship with respect to the corresponding web, said bracket including means cooperating with the opening in said one member and holding said members in a predetermined angular relationship.

2. A structural connection comprising a pair of elongated members, each of said members including a web and a pair of side flanges, said members being of different sizes so that an end of one of said members fits in the space between the side flanges of the other of said members, a bracket connected to and located between the side flanges of said other member and arranged in a predetermined spaced relationship with respect to the corresponding web, said bracket including abutment means and a tab, and an opening provided in the web of said one member spaced from the terminal end surface of the aforementioned end on said one member, said tab being received in said opening with said abutment means in engagement with said one member to hold said members in a predetermined angular relationship.

3. The structure defined in claim **2** wherein said tab is provided with an opening for receiving a locking pin which prevents separation of said one member from said bracket.

4. The structure defined in claim **2** wherein the end portion of said one member is in engagement with the web on said other member.

5. The structure defined in claim **2** wherein said abutment means includes inner and outer abutments, said inner abutment being in engagement with the side flanges on said one member and said outer abutment in engagement with the web on said one member.

6. The structure defined in claim **5** wherein said inner and outer abutments are spaced apart a distance approximately equal to the height of one of the side flanges on said one member.

7. A structural connection comprising a pair of elongated channel members, each of said members including a web and a pair of side flanges, said members being of different sizes so that one of said members fits in the space between the side flanges of the other of said members, a bracket carried by said other member, said bracket including an elongated main body portion lying in a plane which is parallel to and spaced from the web of said other member, one end portion of said bracket being provided with a pair of flanges which are located at right angles to said main body portion, the flanges on said brackets being engageable with and welded to the side flanges on said other member, the longitudinal edges of said main body portion opposite the side flanges on said other member being spaced therefrom to define a pair of elongated spaces, the inner end surfaces of the flanges on said bracket defining inner abutment surfaces which closes one end of said elongated spaces, a centrally located tab on the other end portion of said main body portion and located in said plane, a slot in the web of said one member spaced from one end thereof a distance equal to the distance said main body portion is spaced from the web of said other member, said one member being located in the space between the side flanges of the other member with the tab on said bracket received in said slot and the side flanges thereon located in the aforesaid elongated spaces, said inner abutment surfaces being in engagement with the side flanges on said one member.

8. The structure defined in claim **7** wherein the other end portion of said main body portion includes outer abutment surfaces which are engageable with the web on said one member.

9. The structure defined in claim **7** wherein said tab is provided with an opening for receiving a locking pin which prevents separation of said one member from said bracket.

10. The structure defined in claim **8** wherein said inner and outer abutment surfaces are spaced apart a distance approximately equal to the height of one of the side flanges on said one member.

11. The structure defined in claim **7** wherein one or more integral spacing tabs are provided on the main body portion of said bracket, said spacing tabs being engageable with and welded to the web on said other member so as to locate said main body portion a predetermined distance from the web on said other member.

12. The structure defined in claim **11** wherein two spacing tabs are provided, with one of said spacing tabs being struck out from the main body portion of said bracket to leave an opening therein.

13. The structure defined in claim **12** wherein said one spacing tab is bent in one direction toward the web of said other member and then turned 90 degrees thereto parallel to said web to provide a seat of substantial area engageable with said web.

14. The structure defined in claim **13** wherein the other of said spacing tabs is located at said one end portion of said main body portion of the bracket and is arranged at approximately 90 degrees with respect thereto.

15. A structural connection comprising a pair of elongated members, each of said members including a web and a pair of side flanges, said members being of different sizes so that one of said members fits in the space between the side flanges of the other of said members, a bracket carried by said other member between the side flanges thereof and arranged in a predetermined spaced relationship with respect to the corresponding web, said bracket including abutment means and a tab, an opening provided in the web of said one member adjacent an end portion thereof, said tab being received in said opening with said abutment means in engagement with said one member to hold said members in a predetermined angular relationship, said bracket including a pair of right angle flanges which are arranged in surface to surface contact with the side flanges of said other member and are secured thereto by welding, said right angle flanges extending in a direction away from the web on said other member.

16. The structure defined in claim **15** wherein said tab is provided with an opening for receiving a locking pin which prevents separation of said one member from said bracket.

17. The structure defined in claim **15** wherein the end portion of said one member is in engagement with the web on said other member.

18. The structure defined in claim **15** wherein said abutment means includes inner and outer abutments, said inner abutment being in engagement with the side flanges on said one member and said outer abutment in engagement with the web on said one member.

19. The structure defined in claim **18** wherein said inner and outer abutments are spaced apart a distance approximately equal to the height of one of the side flanges on said one member.

20. A structural connection comprising a pair of elongated members, each of said members including a web and a pair of side flanges, said members being of different sizes so that one of said members fits in the space between the side flanges of the other of said members, a bracket carried by said other member between the side flanges thereof and arranged in a predetermined spaced relationship with respect to the corresponding web, said bracket including abutment means and a tab, an opening provided in the web of said one member adjacent an end portion thereof, said tab being received in said opening with said abutment means in engage-

ment wth said one member to hold said members in a predetermined angular relationship, and a spacing tab provided on said bracket engageable with the web on said other member for spacing said bracket from the web on said other member a predetermined distance, said spacing tab being welded to the web on said other member.

21. The structure defined in claim **20** wherein said tab is provided with an opening for receiving a locking pin which prevents separation of said one member from said bracket.

22. The structure defined in claim **20** wherein two spacing tabs are provided, with one of said spacing tabs being struck out from the main body portion of said bracket to leave an opening therein.

23. The structure defined in claim **22** wherein said one spacing tab is bent in one direction toward the web of said other member and then turned 90 degrees thereto parallel to said web to provide a seat of substantial area engageable with said web.

24. The structure defined in claim **23** wherein the other of said spacing tabs is located at said one end portion of said main body portion of the bracket and is arranged at approximately 90 degrees with respect thereto.

References Cited by the Examiner

UNITED STATES PATENTS

922,919	5/1909	Lawrence.	
1,970,965	8/1934	Leake	189—36
2,042,179	5/1936	Leake	189—36
2,152,584	3/1939	Cranshaw	189—36
3,021,576	2/1962	Conroy	189—36 X

FOREIGN PATENTS

237,985	3/1960	Australia.

FRANK L. ABBOTT, *Primary Examiner.*

RICHARD W. COOKE, JR., *Examiner.*