Jan. 25, 1966 E. SCHWARTZ 3,231,663

ELECTROMAGNETIC SHIELD HAVING MULTIPLE ELECTROCONDUCTIVE PASSAGES

Filed Nov. 1, 1962

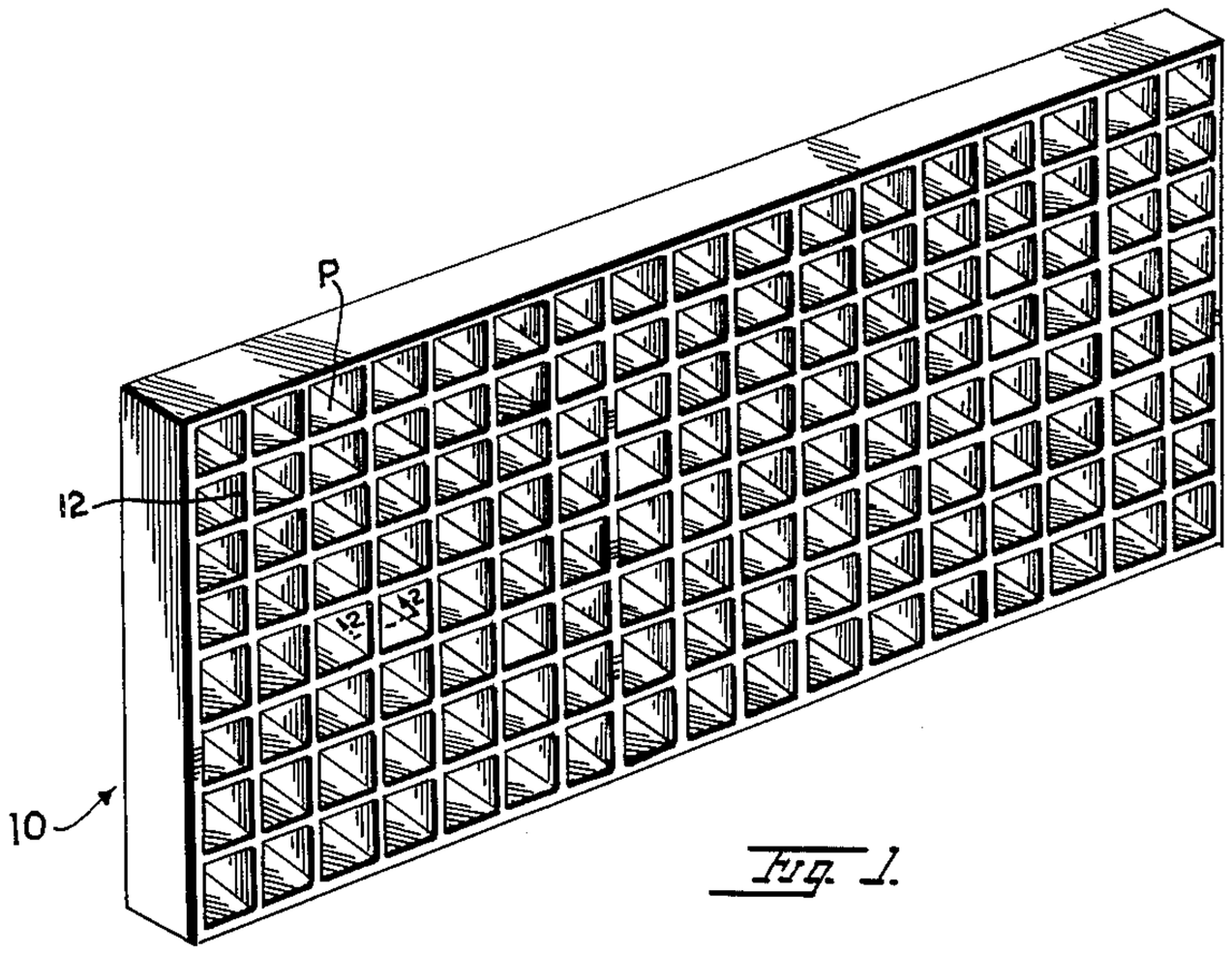

Fig. 1.

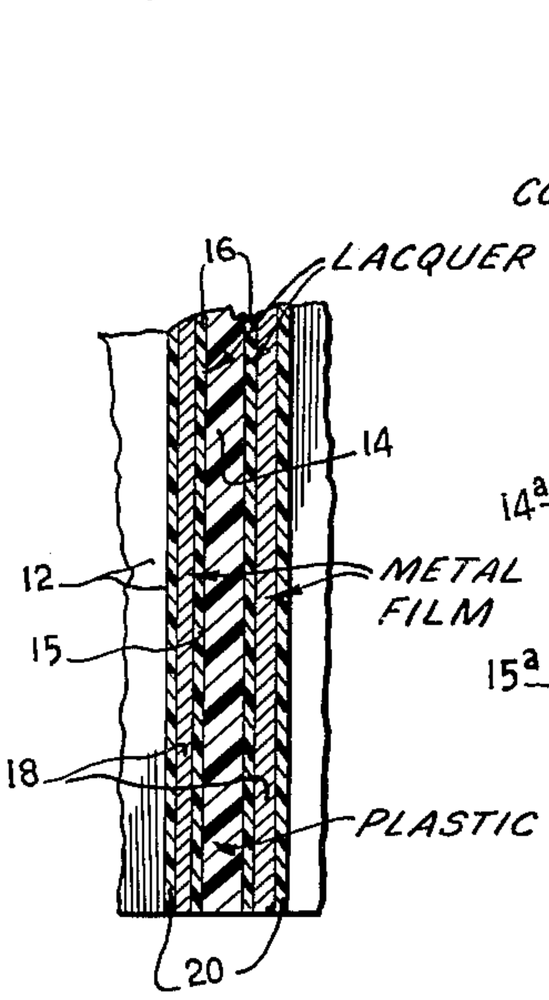

Fig. 2.

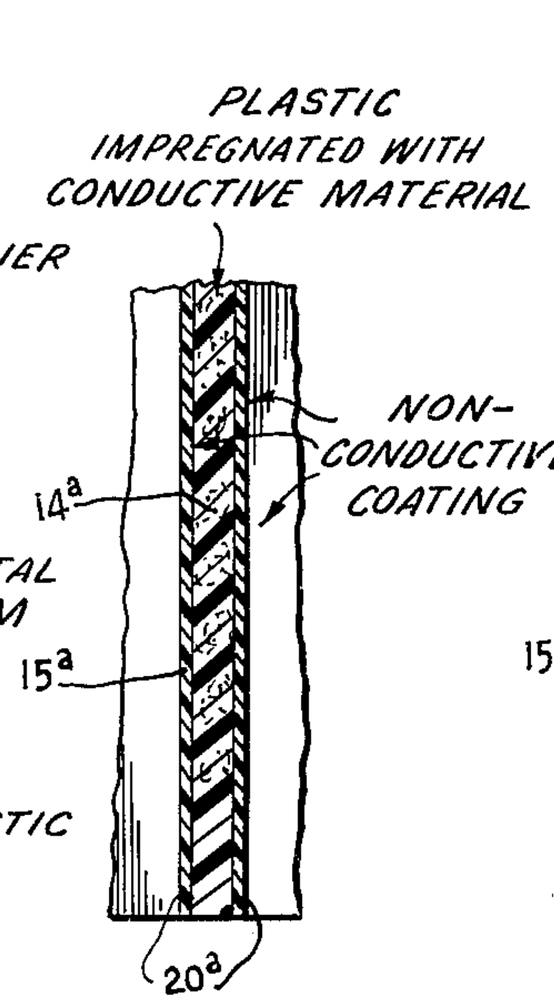

Fig. 3.

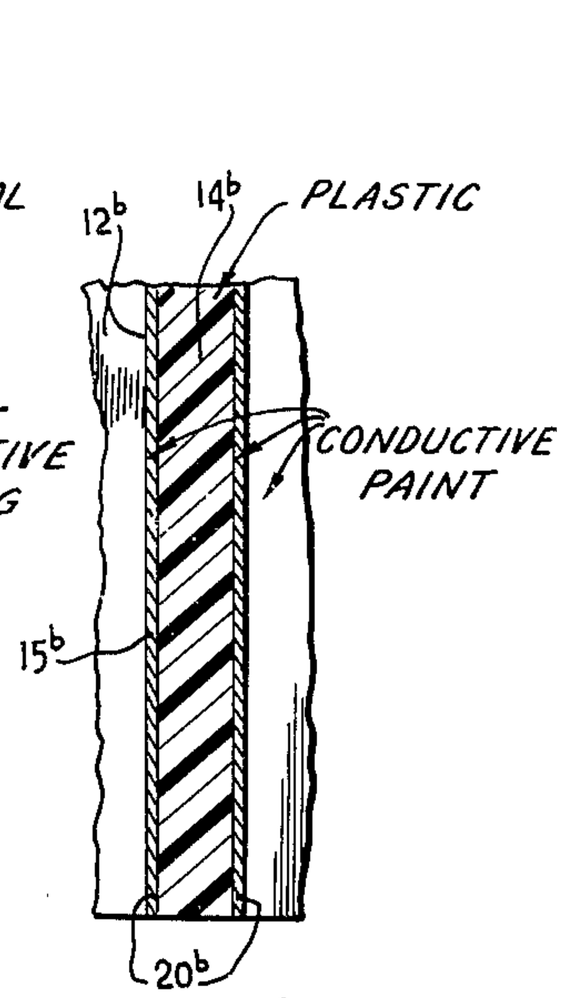

Fig. 4.

INVENTOR.
EDWARD SCHWARTZ
BY
Zoltan Polcsek
ATTORNEY

United States Patent Office

3,231,663

Patented Jan. 25, 1966

3,231,663
ELECTROMAGNETIC SHIELD HAVING MULTIPLE ELECTROCONDUCTIVE PASSAGES

Edward Schwartz, 63 Avenue A., Apt. 20H,
New York, N.Y. 10009

Filed Nov. 1, 1962, Ser. No. 234,631
3 Claims. (Cl. 174—35)

This invention relates to grilles or louver structures employed particularly for radio frequency shielding in fluorescent lighting fixtures, air conditioning ducts, and in other appliances and applications.

It has been proposed heretofore to provide grilles formed of expanded sheet metal into honeycomb structure. It has also been proposed to form a panel of metal tubes welded together in axially parallel disposition. The tubes may be of rectangular, circular or hexagonal cross section. These prior grille structures have been costly to manufacture because of the large quantities of metal employed, the high labor cost in securing individual tubes together, and the large capital investment required for costly metal working machinery.

According to the present invention, it is proposed to provide a grille or louver structure for radio frequency shielding in which the structure has a core formed of plastic material such as styrene, acrylic, and other synthetic resins. The core is a one-piece member having rectangular, circular or hexagonal passages therethrough. The walls of the core are coated with thin metallic films to render them electrically conductive. Such a grille structure serves as an effective shield or filter to prevent the passage of undesired radio frequency emanations from a fluorescent lamp or other appliance, while permitting passage of light and air through the grille. The metallic films can be applied over lacquer coatings applied to the walls of the grilles. The metallic coated grilles can be painted white or in various colors.

It is also possible to form the grilles of plastic materials such as epoxies, polyesters, methacrylates, etc. The plastic molding material may contain conductive materials such as powdered carbon, graphite or metal. The conductive materials will render the grille cores electrically conductive and effective as radio frequency shielding devices. The plastic cores may be formed by extrusion, or other well known plastic molding methods at low cost.

It is therefore a principal object to provide a novel electromagnetic shield structure and novel method of manufacture of such a structure.

Another object of the invention is to provide a grille structure having a plastic core with integrally joined walls coated with a metallic film.

A further object is to provide a radio frequency shield in the form of a nonelectrically conductive grille core rendered electrically conductive by coating or impregnating the core with conductive material.

For further comprehension of the invention, and of the objects and advantages thereof, reference will be had to the following description and accompanying drawings, and to the appended claims in which the various novel features of the invention are more particularly set forth.

In the accompanying drawings forming a material part of this disclosure:

FIG. 1 is a perspective view of a grille embodying the invention.

FIG. 2 is a sectional view on an enlarged scale taken on line 2—2 of FIG. 1.

FIGS. 3 and 4 are sectional views similar to FIG. 2 illustrating other forms of the invention.

Referring to the drawing, there is shown a grille panel **10** which may be rectangular in form or may have other geometrical shape. The panel is formed with a plurality of axially parallel passages **P** defined by opposing walls

12 of a plastic core. The passages are shown as rectangular in the drawing, but they could be cylindrical, triangular, hexagonal or have other geometrical shape. The walls **15** of the core are coated on all sides with a thin coating **16** of lacquer which serves as a sealer and provides a smooth base for a coating of metallic film **18** which covers the coating **16**. This film may be gold, silver, copper, etc., applied by evaporation, electroplating, spraying, painting or other known metal film coating process. The metallic film can be painted with a thin layer **20** of white paint or paint of any desired color. When the grille is to be used in a fluorescent lamp fixture, it is preferably painted white to pass and diffuse light more efficiently. At the same time the grille will serve as an efficient shield to prevent passage of radio frequency, interference elimination, reduction or suppression of noise from the fluorescent lamps, ballast, starter and other parts of the fixture and also of the complete fixture. The passages in the grille serve as wave guide filters to block undesired electromagnetic radiations formed in the operating parts of the fixture. If the grille is to be used in an air conditioning or ventilation duct it may be painted any color or may be left unpainted. In such a duct, the grille will permit free passage of air while serving to block passage of undesired electromagnetic radiation.

FIG. 3 shows another grille structure in which the plastic core **14a** is intermixed, formulated or impregnated with particles of conductive material such as carbon, graphite, metal and the like to render the core electrically conductive. This core may have all its walls **15a** coated with a thin non-conductive paint layer **20a**.

FIG. 4 shows another grille structure in which the plastic core **14b** has all its walls **15b** coated with electrically conductive paint **20b** applied by spraying, dipping, etc.

In all forms of the invention, there is provided a plastic grille core which is rendered electrically conductive on all its external surfaces which can also be grounded or bonded so as to act as an efficient electromagnetic shield in association with an appliance emitting electromagnetic radiation.

The grille cores can be manufactured at low cost by mass production plastic molding machinery. They can be attractively painted in various colors as desired. For different requirements, the dimensions and shapes of the grille cores and passages will be different. Where metallic films or paints are applied to the grille cores they will be controlled in thickness so that they have high electrical conductivity. The grilles make efficient air and light transmission components while effectively blocking electromagnetic radiation of radio frequencies and other frequencies in the electromagnetic spectrum.

It will be understood that the core may be made of papier mache cardboard and the like in addition to the plastic material.

While I have illustrated and described the preferred embodiments of my invention, it is to be understood that I do not limit myself to the precise constructions herein disclosed and that various changes and modifications may be made within the scope of the invention as defined in the appended claims.

Having thus described my invention, what I claim as new, and desire to secure by United States Letters Patent is:

1. An electromagnetic shield, comprising a rectangular grille panel, a core for said panel including a plurality of axially parallel passages extending therethrough and defined by opposing smooth walls, said core being formed of electrically nonconductive plastic material impregnated throughout with sufficient particles of electrically conductive material to render said core electrically conductive on all surfaces thereof, so that said passages constitute wave guide filters to prevent passage of electromagnetic waves

of certain frequencies therethrough while freely passing air and light.

2. An electromagnetic shield according to claim 1, further comprising a thin, non-conductive coating on all the walls of the core.

3. An electromagnetic shield according to claim 1, wherein said conductive material is selected from the group consisting of carbon, graphite and metal.

References Cited by the Examiner

UNITED STATES PATENTS

2,405,987	8/1946	Arnold	174—35
2,840,811	6/1958	McMillan	343—872 X
2,911,333	11/1959	Capen et al.	29—155.5
2,925,457	2/1960	Lindgren	174—35
2,971,083	2/1961	Phillips et al.	240—46.39 X
3,082,510	3/1963	Kelly et al.	29—155.5
3,112,221	11/1963	Price.	

FOREIGN PATENTS

768,996	2/1957	Great Britain.

JOHN F. BURNS, *Primary Examiner.*

RICHARD H. EANES, JR., JOHN P. WILDMAN, *Examiners.*