March 10, 1964 E. M. JONES ETAL 3,124,635

PHOTOELECTRIC MUSICAL INSTRUMENTS AND THE LIKE

Original Filed Aug. 25, 1955 4 Sheets-Sheet 1

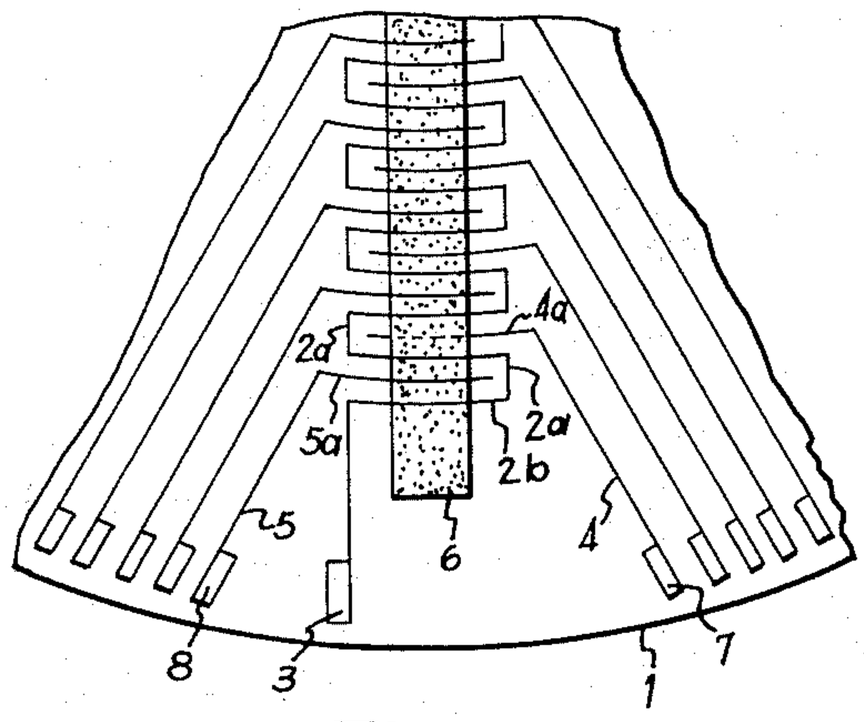

Fig. 1

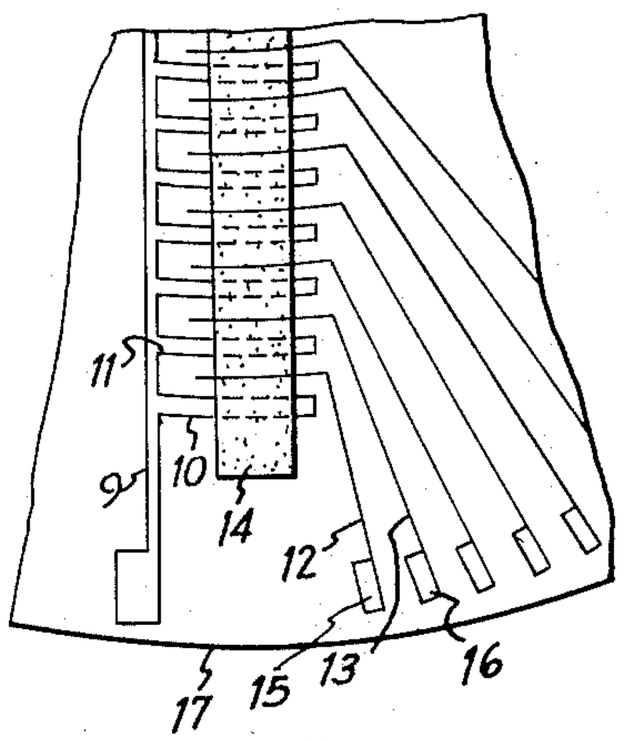

Fig. 2

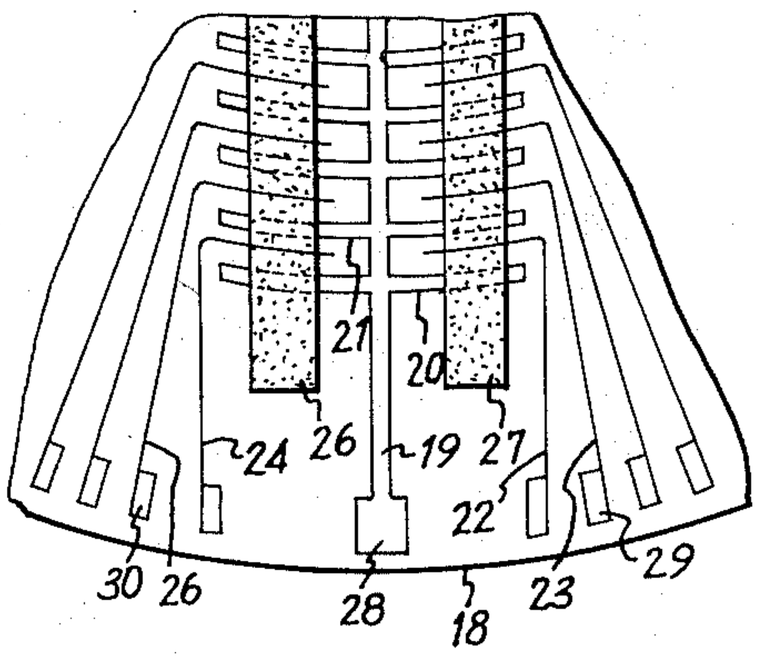

Fig. 3

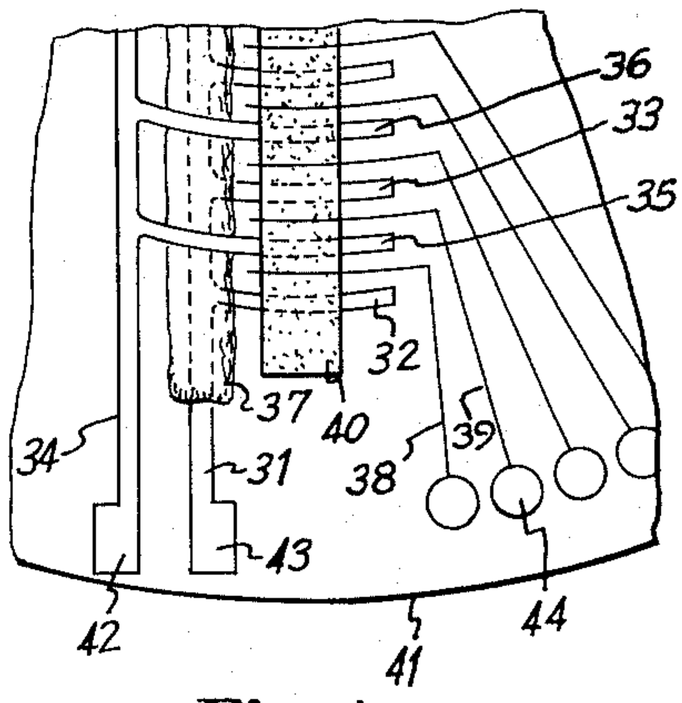

Fig. 4

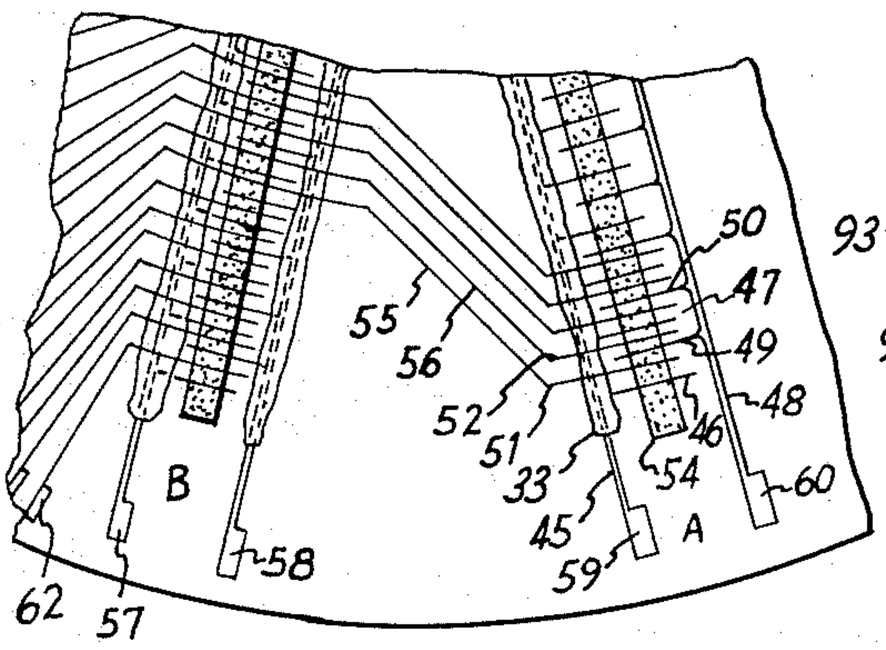

Fig. 5

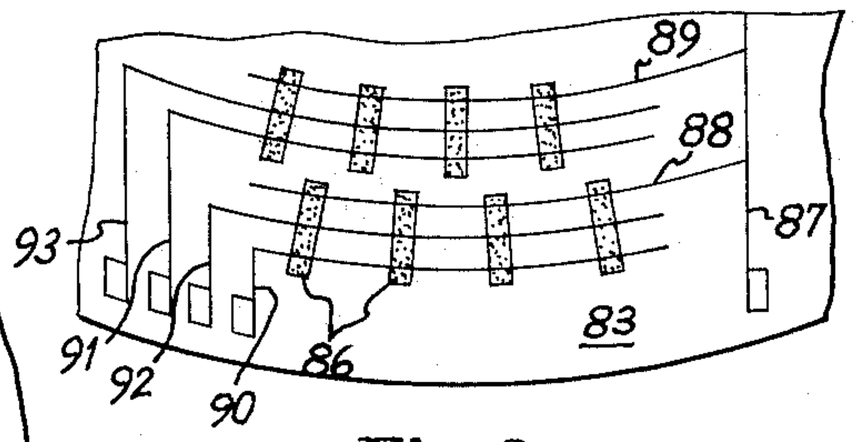

Fig. 6

INVENTOR.
EDWARD M. JONES AND
WESLEY LOVE,
BY
Yuugblut, Melville, Strasser & Foster,
ATTORNEYS.

March 10, 1964 E. M. JONES ETAL 3,124,635

PHOTOELECTRIC MUSICAL INSTRUMENTS AND THE LIKE

Original Filed Aug. 25, 1955 4 Sheets-Sheet 2

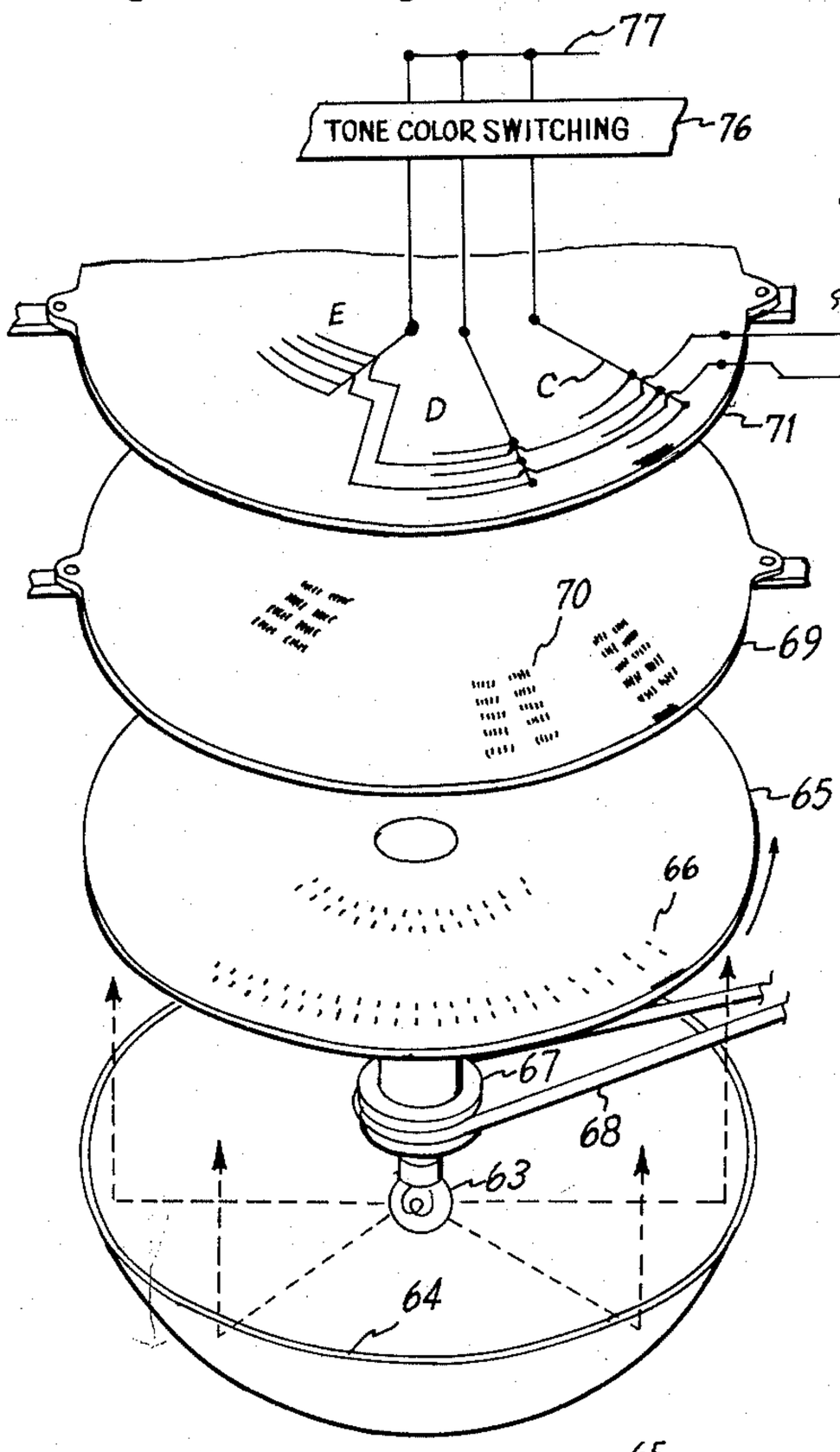

Fig. 7

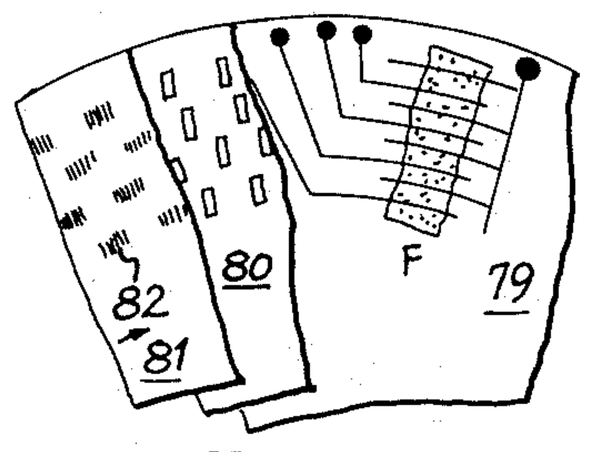

Fig. 8

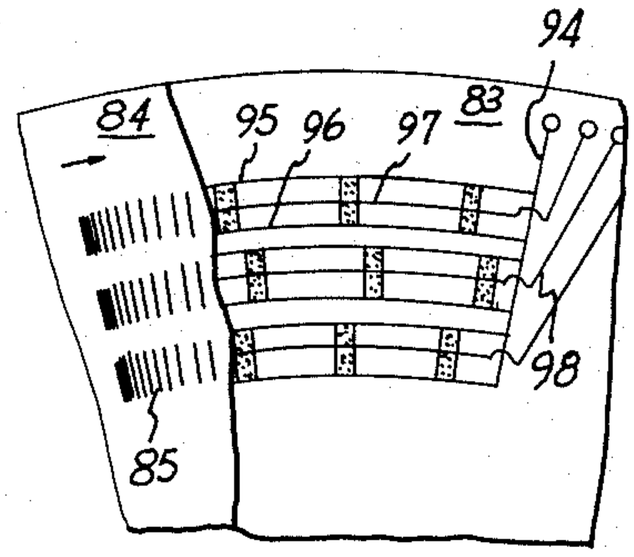

Fig. 9

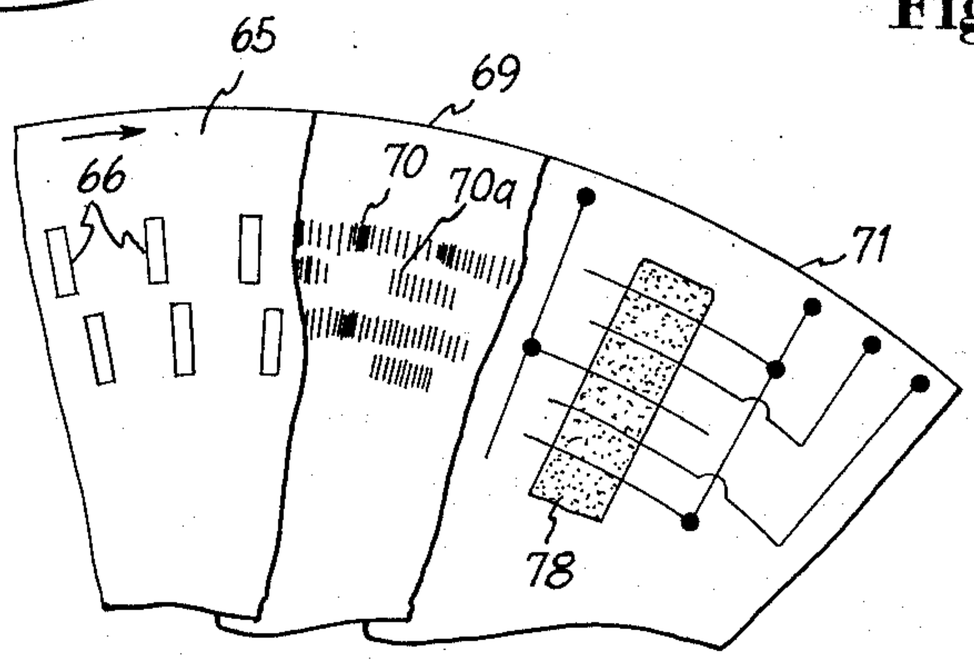

Fig. 10

INVENTOR.
EDWARD M. JONES AND
WESLEY LOVE,
BY
Yuugblut, Melville, Strasser & Foster
ATTORNEYS.

March 10, 1964 E. M. JONES ETAL 3,124,635

PHOTOELECTRIC MUSICAL INSTRUMENTS AND THE LIKE

Original Filed Aug. 25, 1955 4 Sheets-Sheet 3

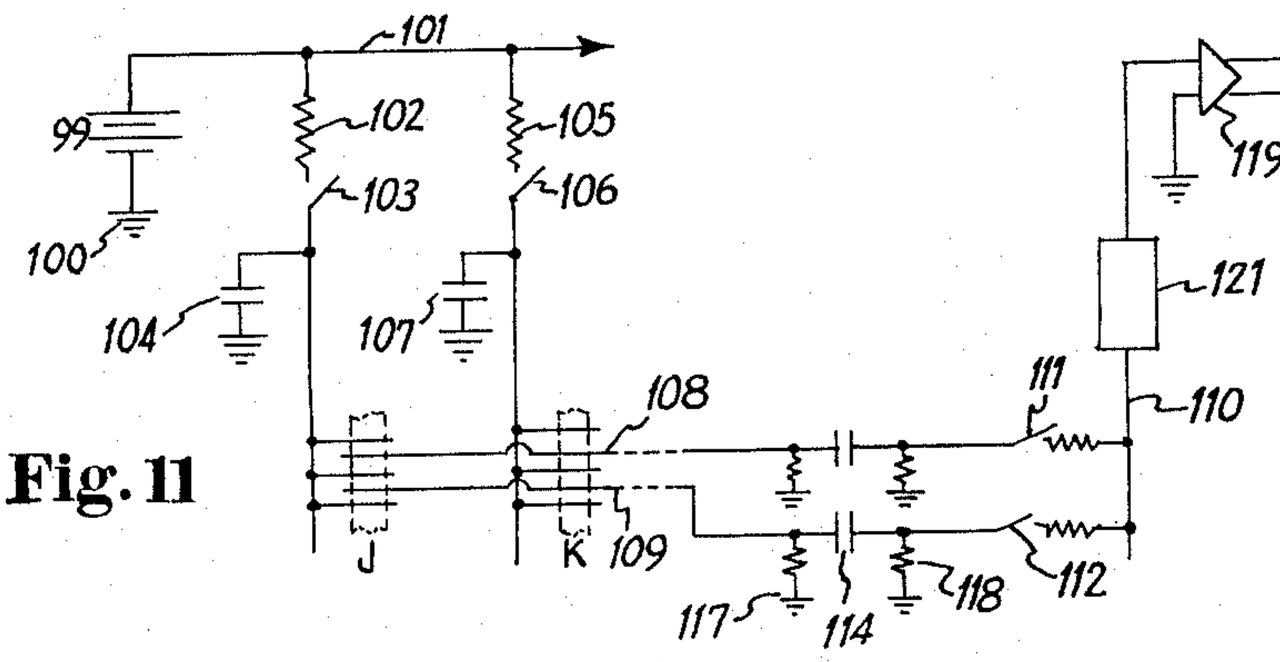

Fig. 11



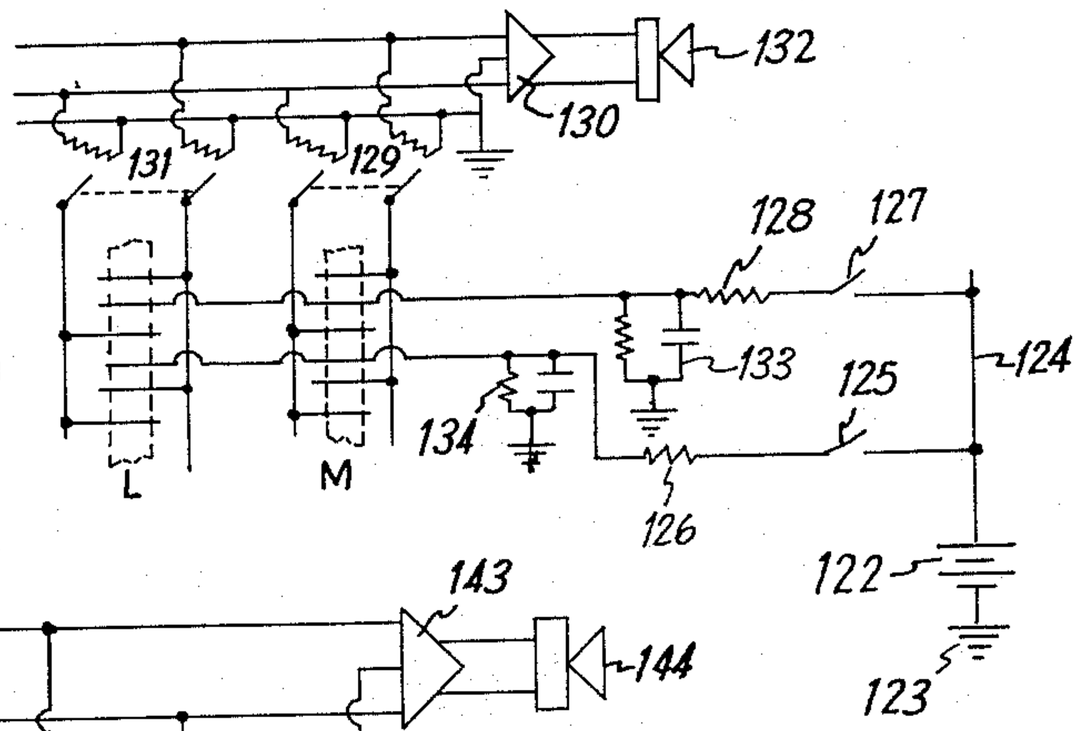

Fig. 12

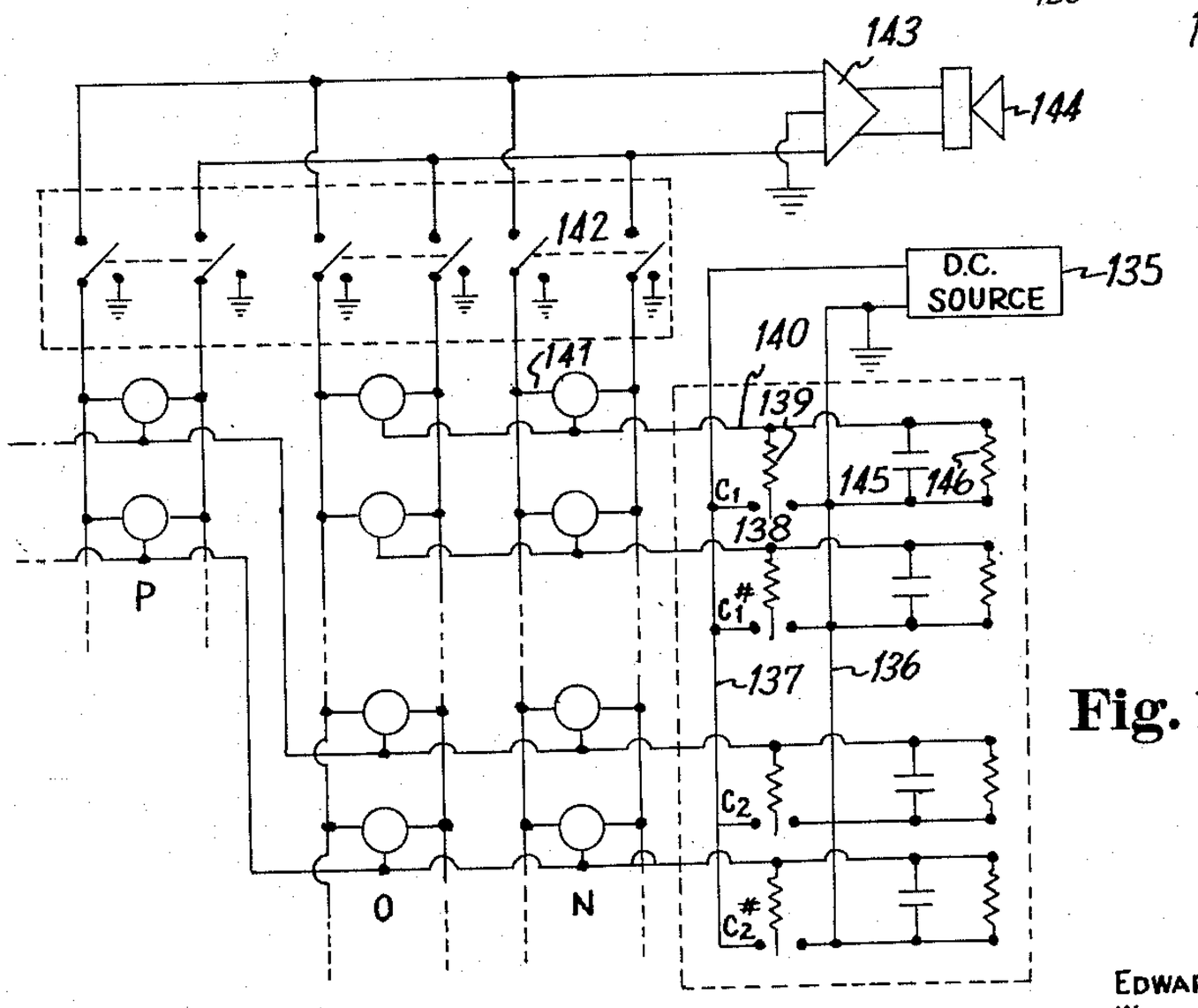

Fig. 13

INVENTOR.
EDWARD M. JONES AND
WESLEY LOVE,

BY
Yungblut, Melville, Strasser & Foster

ATTORNEYS.

March 10, 1964 E. M. JONES ETAL 3,124,635

PHOTOELECTRIC MUSICAL INSTRUMENTS AND THE LIKE

Original Filed Aug. 25, 1955 4 Sheets-Sheet 4

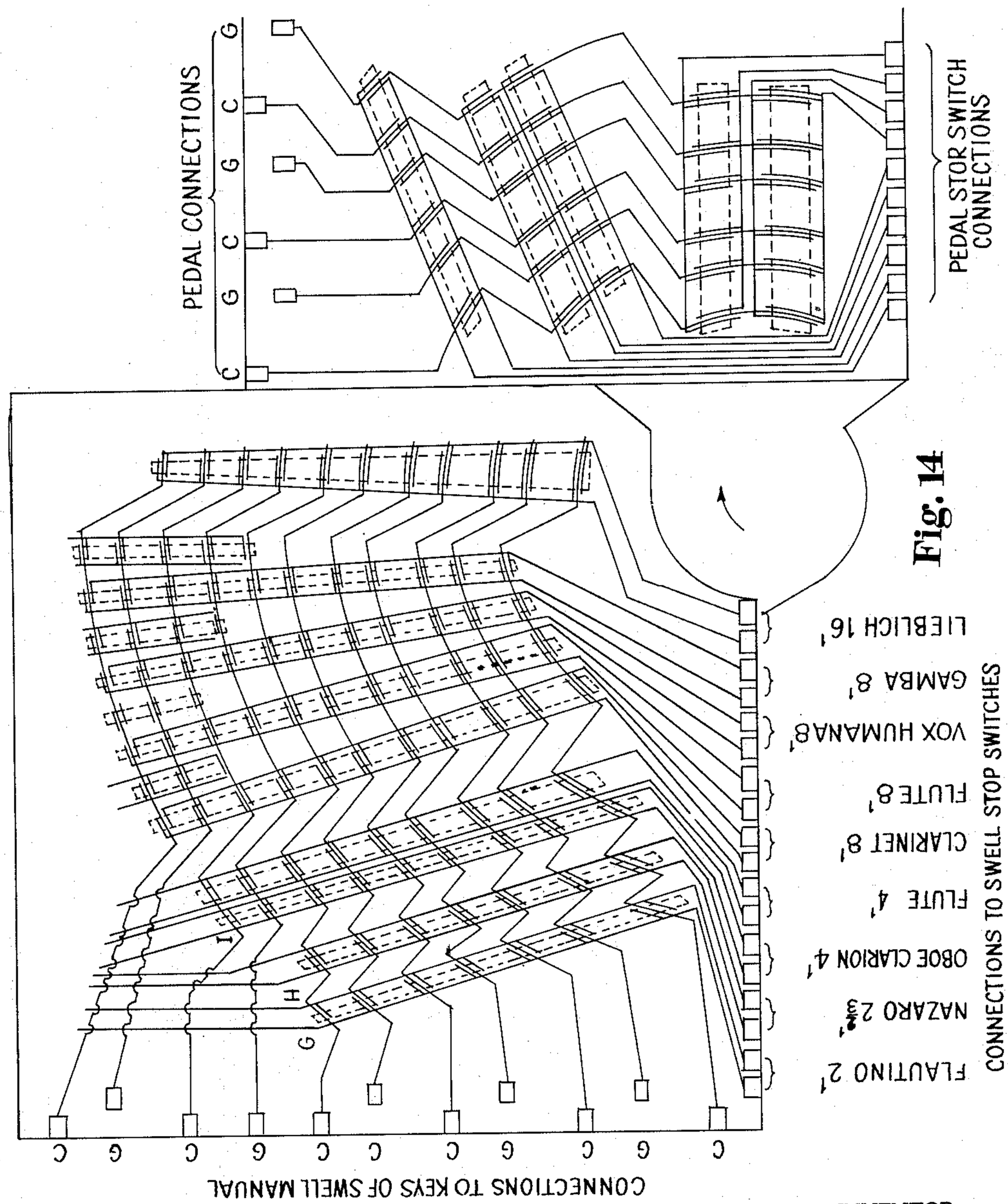

Fig. 14

INVENTOR.
EDWARD M. JONES AND
WESLEY LOVE,

BY
Gnuglist, Melville, Strasser & Foster

ATTORNEYS.

United States Patent Office

3,124,635

Patented Mar. 10, 1964

3,124,635
PHOTOELECTRIC MUSICAL INSTRUMENTS AND THE LIKE

Edward M. Jones and Wesley Love, Cincinnati, Ohio, assignors to D. H. Baldwin Company, a corporation of Ohio

Original application Aug. 25, 1955, Ser. No. 530,570, now Patent No. 3,023,657, dated Mar. 6, 1962. Divided and this application Mar. 5, 1962, Ser. No. 177,430

8 Claims. (Cl. 84—1.18)

This application is a division of the copending case in the names of the same inventors, Serial No. 530,570, filed August 25, 1955, entitled Photoelectric Musical Instruments and the Like, which will issue March 6, 1962, as Patent No. 3,023,657.

Photoelectric musical instruments, as hitherto most highly developed in the art (see, for example, U.S. Patent No. 2,576,759 to Edward M. Jones) have made use of a rotating pitch disc to provide the several desired frequencies, a stationary voice disc containing wave form modifying means to provide the several desired timbres, and a shutter mechanism, together with a photocell on one side of the combination and a light source on the other.

Shutter mechanisms have been simplified and perfected (see, for example, U.S. Patent No. 2,506,599 to John F. Jordan), and consist in general of a supporting disc or plate and shutter elements actuable to cover and uncover simultaneously a plurality of shutter openings for notes in the same or different registers. The note openings are arranged in groups for the various timbres or voices, and these are controlled in turn by door-like shutters adapted to cover or uncover the separate groups.

Such instruments, in the provision of electrical organs, have certain important advantages. Very beautiful tones may be produced since exact control of the wave forms is possible, and these tones may readily be produced in sufficient number to give a highly flexible instrument. Also, the problem of electrical wiring is reduced to a minimum, since the entire output of the instrument may be picked up by one or a small number of photocells, which in turn, can be connected directly to an amplifier. At the same time, they have the disadvantage of requiring mechanical connections between the shutter mechanism and each of the playing keys as well as to each of the stop tabs. Thus there will be within the console a complexity of mechanical transmission elements, which is expensive, takes up room, and impedes servicing.

It has hitherto been suggested that an arrangement might be effected whereby the desired individual tones could be selectively derived by electrical circuit means, thus eliminating or simplifying shutter mechanisms, and doing away with the aforesaid mechanical connections. This would require a separate photocell for each note, and usually each note in each voice, which at the outset is a matter of great expense for equipment. No one has previously suggested any construction for an instrument employing such a system, which is not bulky, unwieldly, and complicated (if the instrument is to have desirable range and flexibility) as well as expensive.

One of the objects of the present invention is the provision of an instrument which will combine the advantages of both systems while eliminating the disadvantages of each.

It is an object of the invention to provide a mechanically simplified and less expensive photoelectric instrument.

It is an object of the invention to provide for the derivation of voices at different pitches from the same keys in a photoelectric musical instrument.

It is an object of the invention to provide electrical keying systems for photoelectric musical instruments, and

in particular keying systems which will produce either sustained or transient type tones.

These and other objects of the invention, which will be set forth hereinafter or will be apparent to one skilled in the art upon reading these specifications, are accomplished by that construction and arrangement of parts of which certain exemplary embodiments will now be described. Reference is made to the accompanying drawings wherein:

FIG. 1 is a partial plan view of an array of photocells on a common support and having one common electrode.

FIG. 2 is a partial plan view of another photocell array which is electrically similar.

FIG. 3 is a partial plan view of a double photocell array of the same electrical type.

FIG. 4 is a partial plan view of a photocell array of a type in which each cell has a polarizing electrode and two other electrodes, the last mentioned electrodes being common to the several photocells in the array.

FIG. 5 is a partial plan view of a pair of photocell arrays with cross connections for the simultaneous derivation of tones of different frequency and voice in a single keying operation.

FIG. 6 is a partial plan view of another form of photocell array.

FIG. 7 is a diagrammatic, exploded view of elements of an exemplary tone and voice generator.

FIG. 8 is a fragmentary diagrammatic showing of a system employing a fixed aperture disc and a moving voice disc.

FIG. 9 is a fragmentary diagrammatic showing of a system employing a moving voice disc and a photocell disc only, the pitch disc being omitted and the frequency being determined by the placement of individual photocell elements on the photocell disc.

FIG. 10 is a diagrammatic showing of a system employing a fixed photocell disc, a fixed voice disc, and a moving pitch disc.

FIG. 11 is a partial circuit diagram showing an arrangement in which the individual notes and the voices are each selected by separate switches.

FIG. 12 is a partial circuit diagram showing an arrangement in which individual note selection is accomplished by the selective polarization of individual photocell assemblies.

FIG. 13 is a partial circuit diagram showing a system adapted for the securing of controlled tone envelopes.

FIG. 14 is a diagrammatic showing of one form of photocell array suitable for use in a photoelectric musical instrument.

The improvements upon which various modifications of the invention hereinafter described are based contemplate the use of one or more arrays of photocells on a single support, and a consideration of what is involved in this is first in order. In its simplest form, a photoelectric cell comprises a pair of electrodes with a body of light-sensitive material electrically located between them. The photoelectric cells may be of two general types. In one such type, the imposition of light on the light-sensitive material will generate an electric current, which may be amplified and used as such. Simple keying by means of switches can be employed with such devices.

In a second type of photoelectric cell the resistivity or impedance of the light-sensitive material varies upon the imposition of light thereon. In this type of device, the effectiveness of the cell depends upon the application thereto of an electric current from external source, i.e. the cell must be polarized. The variations of the applied current through changes in resistivity can be converted into useful electrical oscillations. This type of photoelectric cell may, if desired, be provided with three electrodes with advantages hereinafter set forth; and the keying for

note selection may be accomplished by switches in the leads of the polarizing electrodes.

The invention herein taught is applicable to both types of photoelectric cells.

The invention herein taught has as another of its bases the concept of a combination between a photocell array on a single support and a series of circuit elements on the same support for connecting or interconnecting the individual photocells and other circuit elements. This combination, on its single support, partakes somewhat of the nature of "printed circuitry," and portions of its at least may be made by methods appropriate for printed circuitry.

The provision of a photocell array permits the location of a large number of individual photocells in a very small space, appropriate to the use of pitch discs and voice discs of feasible sizes; and the nature of the photocells themselves is such that they are very thin in the direction normal to the support surface, so that the photocell array, which itself is in the form of a plate, may be approached very closely to such elements as pitch discs and voice discs. The inclusion of circuit elements is also important not only in the elimination of external wiring but also in the confining of the photocell array to a very small area. As a support or base, a very large number of insulating materials may be employed, including such materials as resinous panels, hard rubber panels and the like. Because of the desirability of dimensional stability in an array containing a large number of small individual photocells, glass or other vitreous supports are preferred, but the invention is by no means limited to these.

There are various ways in which metallic elements constituting both the electrodes and the interconnecting circuit elements may be imposed upon a suitable base. This may be done by such known means as electroplating, vacuum-vapor deposition, spraying, or the direct adhesion of a preformed sheet or foil of metal to the base. The metal may be selectively applied only in those areas in which its presence is desired. This may be done by printing, by spraying or evaporating, through a stencil, by the application of a suspension of finely divided metal through a silk screen, and in other ways. Where the metal coating is applied generally, unwanted areas of it may be removed by covering the remaining areas with a resist, chemically etching to remove the metal and afterward dissolving off the resist. Such heat treatments may be applied as are desired to unify or treat the metal coating.

In general, an individual photoelectric cell such as herein contemplated will consist of two or more electrode members formed by portions of the metallic coating aforesaid, spaced laterally on the support, the electrode elements being interconnected by a thin layer of the light-sensitive material. As known in the art, the light-sensitive material may consist of or comprise various metals of which selenium is an example, or various salts of which lead sulphide is an example. The light-sensitive layer may be applied in various ways as by spraying, fusion, vacuum-vapor deposition and the like. Beyond what is set forth in the appended claims, the specific nature of the photocells and of the light-sensitive material does not form a limitation on this invention. To complete an exemplary disclosure, reference is hereby made to an article on page 818 of Nature for June 14, 1947, volume 159, entitled "Lead Sulphide Photo Conductive Cells" by L. Sosnowski et al., and to an article beginning on page 115 of Journal of Scientific Instruments, volume 4, 1927, entitled "The Formation of Films of Lead Sulphide on Glass Surfaces" by H. L. Smith.

A structure comprising a support with spaced metallic electrodes thereon may be completed as a photoelectric cell by imposing a layer of photoelectric substance, e.g. lead sulphide, on the support in such a way as to overlap and interconnect the electrodes in a selected area. The metallic elements forming the electrodes and interconnections may themselves be applied in several increments if desired. This is especially valuable in instances where

one electric conductor must cross another without making electrical contact with it. For example, it is possible to impose a conductive element on a glass or other base surface, then to coat the portion of the conductor at which the cross-over is to be effected with a thin layer of insulative substance, for example, a resin, and then to impose a second conductor which will cross the first in the said area, thus avoiding direct electrical contact between the conductors. In some of the structures hereinafter described, cross-overs are necessary, and they can be effected in this fashion, although where the circuitry will permit, cross-overs are to be avoided by reason of the added expense.

In photoelectric organs, the pitch discs and voice discs are usually so formed that the pitch and voice representations thereon are quite small and quite close together. For example, a pitch disc may be formed with a series of concentric pitch representations each such representation being, say, not more than ⅛ of an inch wide in the radial direction, the spaces between the representations being of the same or a lesser dimension. The voice representations on the coacting voice disc will be similarly placed and sized. These dimensions do not constitute a limitation on the invention, but are given as an illustration of the fact that in the preferred form of an electrical musical instrument of this type the photocell array will consist of a large number of individual photoelectric cells each of which is quite small in area, the cells being quite closely spaced. Certain aspects of the invention are not confined to the use of voice discs or pitch discs as will hereinafter be explained; and indeed the photocell array to which the invention pertains may be used with film representations of voice or frequency indicia, with rotating cylinders and the like.

It has been found that a large number of very small photoelectric cells may be brought together on a single support even to the extent of having one or more common electrodes on the said support; and that the individual photocells can operate independently of each other and without mutual electrical interference providing each such cell is isolated by an electrode element adequately as hereinafter described. One way in which this may be accomplished is illustrated in FIG. 1 and where 1 is, for example, a portion of a glass base. An electrode 2 is deposited thereon having substantially radially arranged portions 2*a* and circumferentially arranged portions 2*b* so that the electrode has a serpentine form. The electrode may be provided with a contact element 3 near the edge of the base. Other electrodes are shown as at 4, 5, etc. each comprising a circumferentially arranged electrode portion 4*a* or 5*a* lying between adjacent circumferentially arranged portions of the electrode 2. A stripe or deposit 6 of light-sensitive material overlies and interconnects the electrode elements. Each pair of adjacent circumferential portions of the electrode 2 defines a photoelectric cell; and it will be seen that the cells are completely contiguous, while each cell is margined on three sides by the electrode 2. The array of cells extends radially of the base 1; the number of individual cells in the array may be sufficient to encompass the frequency range of the instrument in a given voice; and the support may bear other arrays of photocells for other voices. Each of the electrodes 4, 5 etc. may be provided with a contact element 7 or 8 at or near the edge of the support, and to which circuit connections may be made.

In FIG. 2 there is illustrated a common electrode having a substantially radially arranged body 9 and a plurality of circumferentially arranged, spaced branches 10, 11 etc. Additional electrodes 12, 13 etc. are provided, having circumferentially arranged branches lying between the branches 10, 11 etc. of the first mentioned electrode. A coating of light-sensitive material 14 completes the photocells. The electrodes 12, 13 etc. may be provided with contacts 15, 16 etc. near the edge of the support 17.

The branches of the first mentioned electrode define the individual cells, which are adequately isolated thereby.

In FIG. 3 a somewhat expanded arrangement is shown enabling the provision of two photocell arrays in a confined space. Here on the base **18** a common electrode is provided having a radially arranged body **19** and circumferentially arranged branches **20**, **21** etc. extending from both sides of the body. At each side of the body is provided a series of electrodes **22**, **23** etc. and **24**, **25** etc. coacting with respective pairs of the branches as shown. Coatings of light-sensitive substance **26**, **27** complete the two arrays. The common electrode has a contact element **28** adjacent the edge of the support; and the coacting electrodes have similar contact elements **29**, **30** etc.

For certain purposes hereinafter set forth, it is desirable that each photocell have three electrodes. One way of accomplishing this is shown in FIG. 4. One common electrode has a substantially radial body **31** and circumferentially arranged branches **32**, **33** etc. Another common electrode has a substantially radially arranged body **34** and circumferentially arranged branches **35**, **36** etc. The branches **35**, **36** of the second common electrode cross the portion **31** of the first common electrode and must be kept out of electrical contact therewith. To this end the first common electrode has its substantially radial portion covered with a coating **37** of insulating substance prior to the imposition of the second common electrode. The coacting electrodes **38**, **39** etc. have branches lying respectively between a branch of the first and a branch of the second common electrode as illustrated. The individual cells are completed by the imposition of a light-sensitive layer **40** on the support **41**; and each individual cell is defined by a branch of the first and an adjacent branch of the second common electrode. Contact elements may be provided as at **42**, **43** and **44**.

Yet another such arrangement is illustrated in FIG. 5. On one side of the array there is a common electrode having a substantially radially arranged body **45** and circumferentially arranged branches **46**, **47** etc. At the opposite side of the array there is another common electrode having a substantially radially arranged body **48** and circumferentially arranged branches **49**, **50** etc. The branches of the two common electrodes extend toward each other in intermeshing spaced relationship; and the coacting electrodes consist in circumferentially arranged portions **51**, **52** etc. These portions cross the body **45** of the first common electrode and are insulated therefrom by the layer **53**. The photocell array is completed by the layer **54** of light-sensitive substance.

In this figure, a second photocell array is generally indicated at B coacting with a first photocell array A. These arrays may be thought of as for different voices, and there will therefore be cross connections between the coacting electrodes of each. The second array does not need to be specifically described since it is substantially like the first; but the cross connections are indicated at **55**, **56** etc., and will comprise a portion of the circuitry hereinabove mentioned. The common electrodes have contact members **57**, **58**, **59** and **60** on the base **61** and can be used in connection with switching means for voice selection. The coacting electrodes of the several arrays are connected in series as indicated and are provided with contacts **62**. The cross connections **55**, **56** etc. can be at the same pitch level or at different pitch levels, as for example where it is desired to couple an 8 foot voice to a 4 foot voice or the like.

An exemplary arrangement for a photoelectric organ is illustrated diagrammatically and in an exploded fashion in FIG. 7. The arrangement comprises a light source **63** which will be provided with a reflector **64**. More than one light source may be employed if desired. The light from the reflector first passes through a pitch disc **65**. This disc will be rotated at a constant selected speed. It will bear circumferentially arranged pitch indicia, usually but not necessarily in the form of light slits or clear areas **66** in an otherwise opaque ground. The pitch disc will be driven, and means for this purpose are diagrammatically illustrated in FIG. 7 as a pulley **67** and belt **68**, though in actual practice it will usually be found preferable to attach a laminated armature to the periphery of the pitch disc and drive it by electro-magnetic means as illustrated and described in the aforesaid U.S. patent to Jones, No. 2,576,759.

The voice disc **69** bears on its surface circumferentially arranged voice patterns **70**. These patterns are repetitive circumferentially and are characterized by variations (either in width or in density) characteristic of the harmonic content of some particular desired voice. Since the voice disc is stationary, there is no point in continuing the voice representations **70** for any given timbre beyond an area overlying a particular photocell array. In other words, the voice disc may be divided into segmental areas for different voices.

Finally the assembly comprises the support **71** containing a plurality of photocell arrays designated in FIG. 7 at C, D and E, the general nature of which will be clear from the foregoing explanation. An arrangement is shown whereby the coacting electrodes heretofore described act as the polarizing electrodes and are connected through individual switches **72**, **73** etc. to a bus **74** containing a battery or other source of polarizing potential **75**. This arrangement is used for note or frequency selection by the operator in accordance with the requirements of a musical composition, the switches **72**, **73** being connected to the playing keys of the instrument. The several arrays of photocells C, D and E may be connected through a switch arrangement **76** to a bus **77** which in turn is connected to an amplifier and loud speaker system. Thus there has been shown in FIG. 7 the essentials of one form of photoelectric musical instrument providing for the playing of a plurality of notes in selective voices.

In each array in FIGS. 7 and 10 the coating of light-sensitive substance **78** can be arranged so as to be equal to or a multiple of the distance on centers of the light slits **66** in the several rows on the pitch disc or else the same effect can be secured by masking. The masking may be done by the voicing representations on the voice disc as will be readily understood. The pitch disc breaks up the incident light into traveling beams which scan the several voice representations. In this way the light incident on any one photocell in an array will vary in accordance with a desired fundamental frequency and a preselected number and amplitude of harmonics related to the fundamental.

Other arrangements are possible. For example, as shown in FIG. 8 a photocell array F on a fixed support **79** may be employed in connection with a stationary pitch disc **80** and a rotating voice disc **81**. In this instance the voicing representations **82** on the voice disc will be circumferentially continuous; but the pitch disc may be divided up into segmental areas with the light slits differently spaced circumferentially in such segmental areas.

A still simpler construction is illustrated in FIGS. 6 and 9. This construction, in addition to the light source and reflector, employs a fixed disc or support **83** containing arrays of photocells, and a moving voice disc **84**. The voice disc has continuous circumferentially arranged wave form representations **85**. In this form of structure the areas of light-sensitive material **86** are each arranged radially, and are so narrow in the circumferential direction that they have the effect of scanning the voice representations on the voice disc **84** so as too provide electrical vibrations characterized by a desired fundamental frequency and a harmonic content, the kind and amplitude of which is determined by the voice or wave form representations in the series **85**. It is possible in this structure to multiply circumferentially the number of

areas of light-sensitive material **86** in the various circumferential series so as to attain greater volume, the said areas being interspaced from each other a circumferential distance equal to or a multiple of the length of individual wave form representations on the voice disc.

In FIG. 6 there is shown a three-electrode system comprising a common electrode having a substantially radially arranged body **87**, and circumferentially arrange branches **88**, **89** etc., the branches contacting the areas of light-sensitive material near one end in each row. Another electrode such as **90** or **91** is arranged to contact the other ends of the areas of light-sensitive material as shown, while a third electrode such as **92** or **93** traverses the centers of these areas. What is in effect a two-electrode system is shown in FIG. 9 where a common electrode has a radially arranged body **94** and branches **95**, **96** etc. The centers of the various areas of light-sensitive material in each circumferential band is traversed by a separate electrode such as **97** or **98**.

The structure just described has the advantage of mechanical simplicity; but it will be evident that a continuous circumferential voicing representation must be provided for each voice in each frequency throughout the range of the instrument. If the instrument has a wide range of frequencies and a wide range of voices, this may lead to the use of large voice discs and photocell assemblies or to a multiplication of these elements.

By meaus such as have been disclosed, however, it is readily possible selectively to generate electrical vibrations which are characterized by a fundamental frequency and a high content of harmonics of wide range and amplitude, and then secure different voices by selective filtration of the vibrations in ways known to the art. Thus a comparatively simple mechanical photoelectric assembly may be employed which can be, but is not necessarily the structure of FIGS. 6 and 9. In all of the structures thus far described the nature of the vibrations produced as to their harmonic content will of course be determined by the voicing representations on the voice disc. An analytic type instrument in which voice differentiation is secured through selective filtration or by means of formant circuits, can be arranged to generate but a single type of wave form rich in the harmonics adjacent the fundamental; but it can also be arranged to generate two or more types of wave form suitable for selective filtration with or without combination. Thus a wave form may be generated which is rich in the even order harmonics and weak in the odd order, and another wave form may be generated which is rich in the odd order harmonics, the latter being especially adapted for modification to secure woodwind tones. The selection of different voices may be accomplished in all of the modifications herein discussed either by appropriate circuitry containing switches, or by door-like shutters (such as those shown in the Jordan Patent 2,506,599 noted above) adapted selectively to cover and uncover whole arrays of photocells for different voices. But it will have been noted that in the structures herein taught, note selection is accomplished by circuitry including key switches, thus eliminating the problem of individual note shutters and their mechanical connections to playing keys.

The pitch discs and voice discs employed are preferably though not necessarily reproduced photographically from master negatives. The master negatives may be made by methods and apparatus taught in the copending application of Jones, Serial No. 135,912, filed December 30, 1949, now Patent 2,839,960, issued June 24, 1958, and entitled Electronic Synchronizing System for Producing Pitch Discs and the Like. As has been understood, the various fundamentals of the notes of the tempered scale can be closely approximated by series of whole numbers which are not excessively large. In other words, it is possible to divide any given circle into a series of equal divisions which when the circle is rotated at a fixed speed will give a desired fundamental frequency, and to do this throughout the range of the tempered scale with entire auditory satisfaction both as to the relationship of the fundamental frequencies and the relationship of the harmonic frequencies pertaining thereto. The principle applies to the formation of voice discs as well as pitch discs. In a voice disc each circular division will contain a wave form representation, i.e. variations either in width or density representative of the harmonic content of the desired voice.

Voices can be attained in the practice of the invention by configuring the individual photocells (e.g. varying the effective width of the areas of light-sensitive substance between spaced electrodes which are themselves configured for the purpose). In this case a rotating pitch disc may be used to scan the photocells in each array, and the voice discs as such may be omitted.

However, more accurate control can be accomplished by the use of voice discs as set forth above. The preferred form of electric organ employing the principles of this invention, is that shown in FIG. 7, employing a rotating pitch disc, a fixed voice disc and a fixed support or supports containing the various photocell arrays. Very beautiful, individual voices can be secured in such a system from carefully made voice discs; the voice discs may be divided up into segments each producing a different voice at the same frequency; the arrays of photocells may be similarly divided and placed to coact with the voicing representations on the voice disc; cross-coupling means may be provided on the support or supports for the photocell arrays; and an instrument of great flexibility and range may be produced with a single mechanical assembly such as is diagramed in FIG. 7 without mechanical connection to the keys and without an uneconomical complexity of external circuitry. An arrangement of photocell arrays for the swell manual and pedal clavier of such an instrument is diagramed in FIG. 14. The photocell arrays are indicated at G, H, I, etc. It is believed that the figure will be clear to the skilled worker in the light of the legends thereon. He will understand that another assembly of arrays of photocells can be provided for the notes and voices of the great manual in a two-manual instrument. It is possible, of course, to provide any given instrument with a plurality of the mechanical assemblies diagramed in FIG. 7 for the same or different manuals; and where a plurality of such assemblies is provided, it is possible to attain choral effects by slightly detuning them.

The selection of voices in instruments of this class may be accomplished in various ways. As indicated above, door-like shutters may be provided for separate photocell arrays. Separate light sources could be provided for illuminating the wave patterns of each separate voice. Where cross-coupling is not practiced adjacent the photocell arrays, their leads could be brought through a plurality of switches beneath each key to separate headers, the outputs of which could be selected through appropriate switches. But it is simpler to provide for the selection of voices through one or more switch means for each photocell array as hereinafter illustrated.

In a system in which photovoltaic cells are employed note selection may be accomplished through key switches alone. Where the photocells are of the photo-resistive type, either note selection or voice selection may be accomplished through switches controlling the polarization of the individual cells. FIG. 11 is a partial circuit diagram showing portions of two arrays of photocells indicated at J and K. These cells are of the two-electrode type heretofore described, for example, in connection with FIGS. 1, 2 and 3. A source of polarizing potential is shown at **99**, one side of which is grounded as at **100** and the other of which is connected to a bus **101**. A branch lead from this bus is connected to the common electrode of the array J through a transient-reducing resistor **102** and a voice selector switch **103** (normally

actuated by a stop tab in the instrument). A transient-reducing and by-pass capacitor **104** may be connected between the switch and ground. Another branch lead from the bus **101** is connected to the common electrode of the array K through a resistor **105** and a voice selector switch **106**. This circuit may also have a similar capacitor **107**. The coacting electrodes of the photocell array are shown as cross-coupled and as having leads **108** and **109**. These leads are connected to a bus **110** respectively through switches **111** and **112**. These switches may be thought of as connected with the playing keys of the instrument, and are preferably though not necessarily of the "gradual-contact" type, such as those described in U.S. Patent 2,215,124 to Kock and Jordan. Such switches eliminate an unpleasantly abrupt onset of the tones. Each of the leads **108** and **109** may contain a capacitor **113** or **114** bypassed to ground by resistances **115** and **116** or **117** and **118**. The purpose of these networks is to filter out the direct current component of the signal, since the alternating current component is that desired for amplification. The bus **110** is connected to an amplifier **119** which in turn is connected to a loud speaker system **120**. If desired, filter means **121** may be connected in the bus **110** for tone modification.

Photocell arrays in which the individual cells comprise three electrodes have hereinabove been described as for example in connection with FIGS. 4, 5, 6 and 10. Such cells have a distinct advantage in that they are adapted to be connected to a push-pull amplifier or its equivalent in such a way as to cancel the direct current signal components, rendering unnecessary the use of filter networks for the purpose as described above, and making possible a different keying system as will later be described. FIG. 12 shows partially and diagrammatically a circuit arrangement employing such cells, while FIG. 10 shows one arrangement of pitch disc and voice disc in connection therewith. In this modification polarization is accomplished through the key switches. Two arrays of photocells are partially indicated at L and M. As before, these may be arrays for different voice timbres or for voices of different frequencies or footage values, or both. A source of polarizing potential **122** having one side grounded as at **123** is connected to a bus **124**. A branch from this bus passes through a key switch **125** and a transient-reducing resistor **126** to the coacting or intermediate electrodes of interconnected photocells of each array. Another branch passes through a key switch **127** and resistor **128** to another interconnected group of photocells, and so on. The common electrodes of the array M are brought out and connected through a gang potentiometer arrangement **129** to the leads of a balanced amplifier **130** as shown. By using wave forms on the voice disc that are of opposite polarity for the two halves of the three electrode photocells as shown at **70** and **70***a* in FIG. 10, the signals at the two inputs of the amplifier add whereas the D.-C. or transient components cancel. Instead of a vacuum tube push-pull or difference amplifier, it is sufficient to use a center-tapped transformer the secondary of which is connected to an amplifier whose first stages at least are single-ended. All of these are intended to be comprised in the term "balanced amplifier." A transformer has the advantage of having less input resistance to D.-C., causing less trouble with spurious polarizing voltages being built up across those photocells which are not used at a particular moment. Similarly, the two common electrodes of the array L may be connected to the same leads through a gang potentiometer **131**. The amplifier is connected to a loud speaker system **132**. The key switches again may be but need not be of the gradual contact type; and the key switch leads may be provided with transient-reducing networks **133** and **134**.

The circuitry of FIGS. 11 and 12 will provide an instrument giving sustained or organ-type tones. Nevertheless, with suitable mechanisms connected with the key switches, it is possible to produce tones of a percussive

character, for example, tones of which the initial loudness is dependent upon the key velocity, the tones decaying at a gradual rate. Various mechanisms for this purpose are known in the art and reference is made here to U.S. Patent 2,095,707 to Kucher, to Patent 2,482,548 to Kerkhof, and to Patent 2,302,457 to Midgley et al.

In FIG. 13 there is illustrated a system for the production of percussive, transient or similar type tones, this being a system in which the polarizing voltage of the photoelectric cells is applied through key switches, while the tone signals are selected through stop switches. A source of polarizing potential **135** has two leads **136** and **137**. A key switch is indicated at **138** provided with a resistor **139**. The switch has been shown as a single-pole, double-throw switch. This may be connected with a playing key in various fashions as hereinafter explained. The blade of the switch is connected through the resistor **139** to a lead **140** to the coacting terminal of a photocell **141** in an array N. Other arrays are indicated in the figure at O and P, and these may be cross-coupled to the first as shown. The common electrodes of the photocells in the array N are connected through a double switch pole, double-throw **142** or through a potentiometer to the leads of a push-pull amplifier **143** feeding a loud speaker **144**.

Between the lead **140** and the lead **136** is connected a capacitor **145** bypassed by a resistance **146**. During the time the switch **138** makes contact with the lead **137** a charge is applied to the capacitor **145**. When this contact is broken, the capacitor **145** is disconnected from the source **135** and discharges, polarizing the photocell **141** with a potential which is not constant but declines at the rate of discharge of the capacitor, producing a percussive-type tone envelope. The rate of decay or decline of the polarizing potential can be controlled by the size of the capacitor and the value of the resistor **146**.

The switch **138** may be actuated by the key in various ways. If, upon depression of the key, the switch **138** makes contact with the lead **137** and retains that contact until the key is released, the tone produced will remain at constant loudness until the key is released, at which time an exponential decay will occur. The effect will be that of organ tones excepting that if the keys are played staccato, the exponential decay will become apparent, giving a harp-like effect, or effects similar to plucked strings, struck bars, etc. If, on the other hand, upon depression of the key the switch makes momentary contact with the lead **137** and then breaks this contact, the exponential decay will occur immediately upon the full depression of the key, giving piano-like effects. If a mechanism is employed to cause the duration of the contact effected by the switch **138** with the lead **137** to be roughtly proportional to the key velocity, then the loudness of the tone is under the control of the perfomer, or a circuit as in the Kerkhof patent could be used to control loudness.

If, upon depression of the key, the switch **138** first effects contact with the lead **137** and then with the lead **136** when the key is released, the effect will be that of causing the tone to die out more rapidly, simulating the action of the damper in a piano.

Modifications may be made in the invention without departing from the spirit of it. Having thus described the invention in certain exemplary embodiments, what is claimed as new and desired to be secured by Letters Patent is:

1. In a photoelectric musical instrument, a photocell array on an insulative support, said array comprising a plurality of photocells each with three electrodes formed as metallic coatings on said support, and interconnected by photosensitive material, each photocell comprising an intermediate electrode and outer electrodes, means moving with respect to said insulative support to subject the individual photocells to rays of light productive of electrical vibrations at musical frequencies, selective means for applying polarizing potential to the intermediate electrodes, and means for connecting the outer electrodes of

each photocell with an amplifier system of balanced type, wherein the direct current components in the said outer electrodes neutralize each other, leaving the alternating current outputs for amplication.

2. In a photoelectric musical instrument, a photocell array comprising an insulative support and a series of electrodes in the form of metallic coatings on said support, said electrodes arranged with substantially parallel portions in groups to form the electrodes of contiguous photocells, said electrode portions extending substantially parallel in each said group, and each said group having a plurality of coatings of photoelectric material interconnecting said electrodes but spaced on said support in the direction of the length of said parallel portions of said electrodes.

3. The structure claimed in claim 1 wherein said photocell array comprises two common electrodes with interdigitating parallel branches, with an additional parallel electrode interposed between each adjacent pair of said branches.

4. The structure claimed in claim 2 wherein one at least of the parallel electrode portions in each group is connected to a common electrical lead on said support.

5. In a photoelectric musical instrument having a light source, the combination of a rotating pitch disc and a stationary voice disc, the pitch disc having concentric divided areas suitable for the production of desired frequencies, and the voice disc having voicing representations also arranged circumferentially but in different, spaced, radial groups, and a plurality of arrays of photocells, one for each radial voice disc group, each said photocell comprising

three electrodes in the form of metallic coatings on supporting means, and having substantially parallel circumferentially arranged interdigitated portions, and substantially radially arranged coatings of photosensitive material interconnecting the said parallel portions of each array, means for connecting photocells of each array to balanced amplifier means, and means for selectively polarizing the photocells of the arrays.

6. The structure claimed in claim 5 wherein the last mentioned means include tone envelope control means.

7. The structure claimed in claim 5 wherein the three electrodes of each photocell consist of two outer electrodes and one intermediate electrode, wherein the polarizing means is connected to the intermediate electrode, and wherein the means for connecting the said photocells to a balanced amplifier comprise respective connections between the outer electrodes and the ends of a winding of a center-tapped transformer.

8. The structure claimed in claim 2 wherein each group comprises an intermediate electrode and outer electrodes, means moving with respect to said insulative support to subject individual groups to rays of light moving with respect thereto, selective means for applying polarizing potential to the intermediate electrodes, and means for connecting the outer electrodes of each group with an amplifier system of balanced type, wherein the direct current components in the said outer electrodes neutralize each other, leaving the alternating current outputs for amplification.

No references cited.