Dec. 3, 1963 H. J. LEMMENS ETAL 3,113,236

OXIDE DISPENSER TYPE CATHODE

Filed June 17, 1960

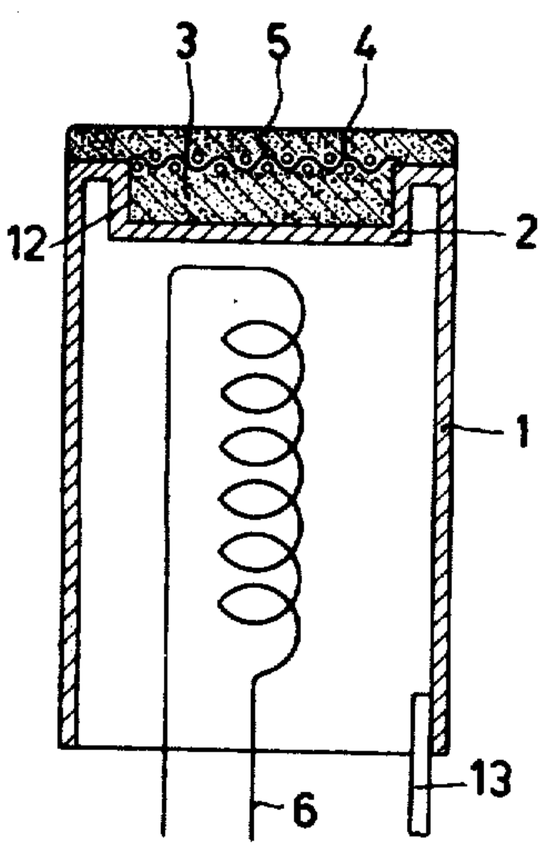

FIG. 1

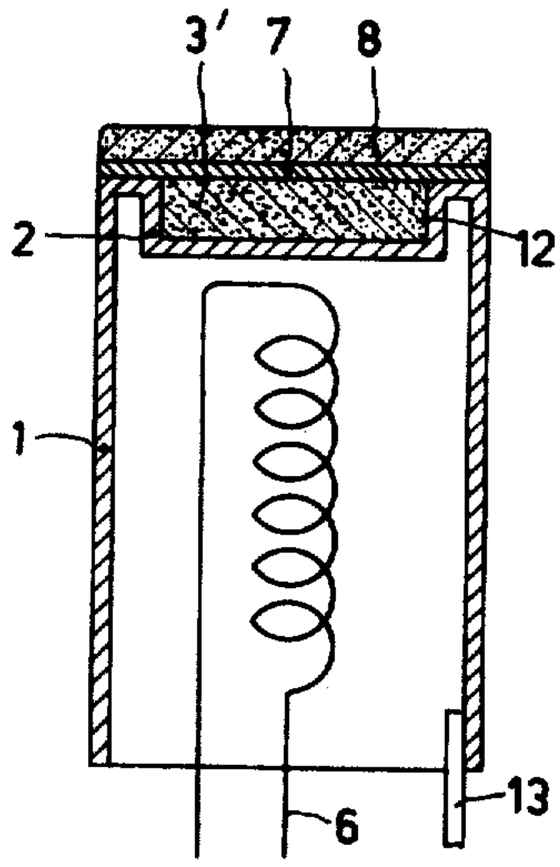

FIG. 2

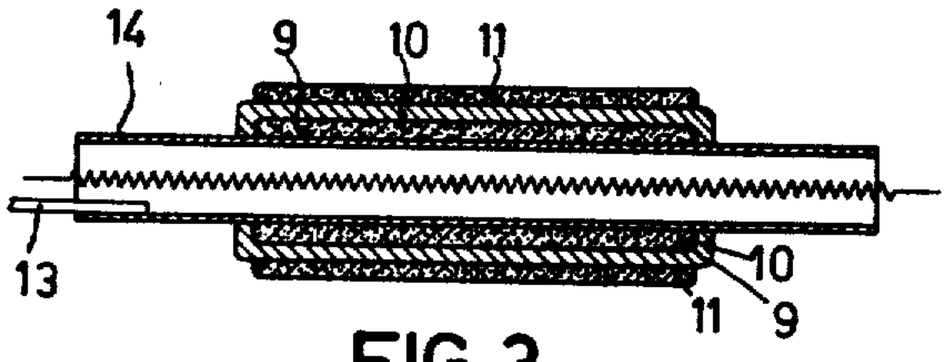

FIG. 3

INVENTOR
HENDRIKUS J. LEMMENS
PIETER ZALM
ANTONIUS J.A.V. STRATUM
JOHANNES R. BLATTER
FRIEDRICH H. R. ALMER
BY
Frank R. Trifari
AGENT

United States Patent Office

3,113,236

Patented Dec. 3, 1963

3,113,236
OXIDE DISPENSER TYPE CATHODE

Hendrikus Johannes Lemmens, Pieter Zalm, Antonius Johannes Alberta Van Stratum, Johannes Reinier Blatter, and Friedrich Hermann Raymünd Almer, all of Eindhoven, Netherlands, assignors to North American Philips Company, Inc., New York, N.Y., a corporation of Delaware

Filed June 17, 1960, Ser. No. 36,827
Claims priority, application Netherlands June 23, 1959
6 Claims. (Cl. 313—346)

This invention relates to cathodes for electron devices or electric discharge tubes. In particular, it relates to a thermionic, oxide, dispenser-type cathode, in which a non-metallic emissive layer activated by barium is separated from a source or layer dispensing barium by means of a permeable metal layer.

A known cathode comprises an electron emissive layer which consists of alkaline-earth oxides sprayed onto a porous metal layer having beneath it a layer of barium-aluminum which contains a metal binding the aluminum and which in turn is supported by a carrier of, for example, ceramic material. The barium-aluminum dispenses barium at a comparatively high vapor pressure, which diffuses through the porous metal layer into the alkaline-earth oxide layer. The evaporation of barium from such a cathode will be considerable.

Another known cathode is made by spraying onto a support a mixture of carbonyl nickel powder, barium-strontium carbonates and zirconium hydride as a reducing agent. The layer is pressed under high pressure and sintered. Since the layer contains a high percentage of nickel powder, the cathode has a metallic appearance and its emission density is lower than that of ordinary oxide cathodes.

The chief object of the invention is to provide a cathode capable of high continuous emission densities at relatively low operating temperatures and possessing low evaporation of active material.

According to the invention, the cathode comprises a non-metallic emissive layer activated by barium, and possibly strontium, separated from a layer or source dispensing the alkaline-earth metal by a metal layer permeable to said alkaline-earth metal. The permeable metal layer constitutes the current supply means or conductor for the activated layer and is of a composition such that this metal layer, together with the non-metallic activated layer, substantially does not form any insulating interfaces. The layer or supply dispensing the alkaline-earth metal consists of alkaline-earth metal compounds from which free alkaline-earth metal is produced or generated by a metal surrounding it or contained in it.

A simple embodiment of a cathode according to the invention comprises a layer of barium-strontium oxide provided on a sprayed layer of inactive or passive nickel powder having beneath it a layer of barium-strontium oxide on a support of active nickel, which serve as the dispensing source, the nickel powder layer making electric contact with the active nickel support. The term "active" and "inactive or passive" nickel is to be understood herein to mean nickel containing or substantially not containing respectively reducing impurities such as aluminum, silicon, tungsten, or magnesium, which function to free by a reducing process barium from barium-strontium oxide. In general, active nickel contains an impurity content exceeding, in weight percent, 0.01% of aluminum or 0.5% of tungsten or 0.01% of silicon or 0.01% of magnesium, or combinations of these impurities equivalent to the specified value of one of them. Passive nickel contains a much lower impurity content than that specified above, and when it contains no reducing impurities at all, it may be described as inactive, which is

preferred in the invention. Since the nickel layer which supports the emissive layer consists of preferably inactive or passive nickel, compounds such as silicates which exhibit high electric resistance and for many oxide cathodes give rise to the very undesirable so-called interface layer resistance are not formed between this nickel layer and the emissive layer. It has been found that cathodes of the invention are capable of a continuous (D.C. emission, in contrast to pulsed emission) current density of 1.5 a./m.^{2} at a temperature of 760° C., which is several tens of degrees lower than is usual for oxide cathodes.

In the cathode of the invention, a fine nickel gauze or mesh or a perforated nickel foil may be employed as the permeable metal member instead of the porous sprayed nickel layer, although the workability of these materials with the required purity is comparatively poor. Instead of nickel as the material for the permeable metal layer, it is alternatively possible, for example, to use molybdenum or tungsten or, if the cost is not objectionable, platinum. For the dispensing source, use may alternatively be made of a barium oxide compound mixed, for example, with reducing material, for example TiH_2 (which during heating decomposes to form Ti), which affords the advantage that it is not necessary to use carbonates to form the oxides previously suggested, in which latter event a fairly large quantity of gas is always evolved.

Instead of barium-strontium oxides, obtained from the corresponding carbonates, it is possible to use for the emissive layer, for example, barium oxide or strontium oxide or calcium oxide, or barium zirconate, which also affords the advantage that it does not itself evolve gas upon activation of the cathode and is not harmed by contact with air.

In order that the invention may be readily carried into effect, it will now be described in detail, by way of example, with reference to the accompanying drawing, in which FIGS. 1, 2, and 3 are cross-sectional views of three embodiments of a cathode according to the invention.

FIG. 1 illustrates a planar type cathode of the invention, comprising a nickel cylinder **1** having a reentrant upper side **2** forming a cavity **12** containing barium-strontium oxide **3** in the form of a pellet. A gauze or mesh **4** of pure nickel wire, for example, of 35 microns thickness, is welded on top of the cylinder enclosing the cavity **12**. A carbonate layer **5**, for example, of 70 microns thickness, to be later decomposed into barium-strontium oxide, is sprayed onto the nickel gauze **4**. The cathode contains a heating filament **6**. A lead-in- conductor **13** is welded to the bottom end of the nickel support **1**. The nickel cylinder **1** consists of nickel and several hundredths percent (0.03%) of aluminum and silicon, and is thus active nickel. The nickel mesh **4** is of high purity and contains no detectable amount of any of the reducing impurities referred to earlier, and is thus inactive nickel. In the manufacture of such a cathode, the nickel cylinder **1** may be formed to the shape illustrated in the drawing by a drawing operation. Next, the oxide pellet **3** is placed inside the cavity **12**. The pellet **3** may have dimensions of 2 millimeters in diameter and 0.3 millimeter thick, and may comprise a mixture of barium and strontium carbonates in the ratio of 55 to 45 by weight. These carbonates, which are available in powder form, may be heated at 1050° C. in vacuum to convert them to the corresponding oxides and the resultant oxide powder then compressed to the pellet form shown in the drawing. After the oxide pellet **3** has been introduced into the cavity **12**, the mesh **4**, whose mesh openings are approximately 0.05 millimeter by 0.05 millimeter, is welded over the cavity **12** so as to completely enclose the pellet **3**, except, of course, for the mesh openings. Then, a mixture of barium and strontium carbonates, in a weight ratio of 55 to 45, sus-

pended in a liquid vehicle, is sprayed onto the mesh **4** and surrounding cylinder portions to the thickness previously mentioned. A suitable spraying mixture is provided by ball milling 50 grams of powder in 100 millilitres of amyl acetate after which 40 millilitres of butanol with nitrocellulose is added. Finally, the terminal **13**, which constitutes a current supply lead for the cathode from the external circuit, is welded in place and the filament **6** provided within the hollow support **1**. As will be noted, the supply conductor **13**, by which the cathode is connected in the external circuit, provides a direct current connection through the nickel cylinder **1** directly to the mesh **4**, to which it is in direct electrical contact and on which the emissive layer **5** is located. The structure below the mesh comprises the barium dispensing source. After suitable activation of the cathode, which includes heating the cathode to a temperature of about 1050° C. in vacuum for about 5 minutes, which, in the usual way, serves to convert the carbonates in the structure to the corresponding oxides, the cathode may be operated in the usual electron device at temperatures ranging from about 700° C. to 850° C. In this range of temperatures, the impurities in the active nickel portion **2** reduce the barium-strontium oxides **3** in the cavity producing free barium, which, by a diffusion process, passes outwardly through the openings in the mesh **4** into the oxide layer **5** thereby activating it and causing it in turn to be capable of very high electron emission densities. Because of the constant supply of barium to the emissive layer **5**, high continuous or D.C. emission becomes possible, in sharp contrast to the usual oxide cathode, which is incapable of sustaining high emission densities for any extensive period. For this reason, where oxide cathodes have been required to produce large amounts of current, pulsing of the cathode has been necessary. Thus, the cathode of the invention is capable of operation at the low temperatures of the oxide cathode, but without being restricted to the usual pulse operation to produce high emission densities. Moreover, it has been found that barium or strontium evaporation from the cathode is relatively small.

FIG. 2 shows a modification of the cathode illustrated in FIG. 1. In this modification, the pellet **3'** consists of barium aluminate, in which the mole ratio of barium oxide (BaO) to aluminum oxide (Al_2O_3) is 2½ to 1.0, to which has been added 5% by weight of titanium hydride (TiH_2). In this case, the titanium hydride serves as a reducing agent for the barium compound which, when heated to about 800° C., will result in the generation of free barium. As a reducing compound is mixed directly in with the barium compound, the support **1**, **2** need not contain any reducing impurities. Thus, it may consist of passive nickel or molybdenum. However, since the usual nickel employed in electron tubes does contain some impurities, that material is most conveniently used for the support **1**. The pellet **3'** fills the cavity **12** and forms with the surrounding portions of the cylinder **1** a relatively smooth surface. Onto this surface is sprayed a layer **7** of pure nickel powder, which thus has an inactive character, for example, to a thickness of 20 microns. As will be noted, the layer **7** is directly electrically connected to the support **1**. Finally, onto the pure nickel layer **7** is provided an oxide layer **8**, which may be a mixture of barium and strontium oxides in the ratio of 55 to 45. The layer **8** may be, for example, 40 microns thick. In order to increase the resistance of the cathode to poisoning, the barium aluminate may be replaced with a mixture of barium and strontium oxides to which the titanium hydride is added. This combination produces a higher vapor pressure of barium, which means then that the dispensing rate is increased. This renders the cathode less susceptible to poisoning.

FIG. 3 shows a cylindrical type cathode of the invention. In this case, a hollow support **14** with a rectangular cross-section, and which may be of active cathode nickel, supports on opposed surfaces sprayed layers of mixtures of barium and strontium oxides **9**, which, as usual, are provided in the carbonate form and which are converted to the oxides during activation, and on top of the oxide layers **9** is sprayed a layer of pure, inactive, nickel powder **10**, which encloses the oxide layers **9**. Such sprayed layers are porous and permeable to diffusing barium atoms. Finally, on top of the pure nickel layers **10** are provided layers **11** of strontium oxide, which, as usual, are initially provided in the carbonate form and converted to the oxide during activation. As will be noted, the nickel layer **10** contacts the nickel support **14**. As described earlier, as the current supply member or permeable layers **4**, **7**, and **10** are of inactive material, they do not form insulating interfaces with the emissive layer, which is responsible for the high D.C. emission capabilities of the cathode of the invention.

While we have described our invention, in connection with specific embodiments and applications, other modifications thereof will be readily apparent to those skilled in this art without departing from the spirit and scope of the invention as defined in the appended claims.

What is claimed is:

1. A thermionic cathode for an electron device operable at temperatures of about 700° C. to 850° C., comprising a support, a first layer on said support of a barium oxidic compound associated with a reducing substance and capable when heated of reacting together to dispense continuously free barium metal, a barium-permeable electrically-conductive grid-like metal member over and enclosing the said first layer, means providing an external circuit connection to said grid-like metal member, an oxidic emissive layer on the grid-like metal member on the side remote from said first layer, and means for heating said cathode whereby barium dispensed by said first layer diffuses through the grid-like metal member into the oxidic emissive layer activating same to produce copious electrons, said grid-like metal member consisting essentially of inactive nickel free of any element selected from the group consisting of aluminum, silicon, tungsten and magnesium and thus substantially unreactive with the emissive layer to form an insulating interface.

2. A thermionic cathode for an electron device operable at temperatures of about 700° C. to 850° C., comprising a conductive support, a first layer on said support of a barium oxidic compound associated with a metallic reducing substance and capable when heated of reacting together to dispense continuously free barium metal, a barium-permeable electrically-conductive grid-like metal member over and enclosing the said first layer and connected to the support, means connected to said support to provide an external circuit connection to said grid-like metal member, an emissive layer comprising principally strontium oxide on the grid-like metal member on the side remote from said first layer, and means for heating said cathode whereby barium dispensed by said first layer diffuses through the grid-like metal member into the oxide emissive layer activating same to produce copious electrons, said grid-like metal member consisting essentially of inactive nickel free of any element selected from the group consisting of aluminum, silicon, tungsten and magnesium and thus substantially unreactive with the emissive layer to form an insulating interface.

3. A cathode as set forth in claim 1 wherein the grid-like metal member comprises a thin preforated nickel foil.

4. A cathode as set forth in claim 1 wherein the emissive layer consists of a member selected from the group consisting of strontium oxide and calcium oxide.

5. A cathode as set forth in claim 1 wherein the emissive layer consists of barium zirconate.

6. A cathode as set forth in claim 1 wherein the grid-like member comprises a fine nickel mesh.

(References on following page)

References Cited in the file of this patent

UNITED STATES PATENTS

2,131,204	Waldschmidt	Sept. 27, 1938
2,499,192	Lafferty	Feb. 28, 1950
2,543,728	Lemmens et al.	Feb. 27, 1951
2,698,913	Espersen et al.	Jan. 4, 1955
2,813,995	Watts	Nov. 19, 1957
2,864,028	Coppola	Dec. 9, 1958
2,912,611	Beck et al.	Nov. 10, 1959
2,945,150	De Santis et al.	July 12, 1960
2,965,793	Feaster et al.	Dec. 20, 1960
3,056,061	Melsert	Sept. 25, 1962

FOREIGN PATENTS

568,817	Canada	Jan. 13, 1959
1,046,203	Germany	Dec. 11, 1958
1,047,320	Germany	Dec. 24, 1958

UNITED STATES PATENT OFFICE

CERTIFICATE OF CORRECTION

December 3, 1963

Patent No. 3,113,236

Hendrikus Johannes Lemmens et al.

It is hereby certified that error appears in the above numbered patent requiring correction and that the said Letters Patent should read as corrected below.

Column 2, line 10, for "a./m.^{2}" read -- A/cm^2 --.

Signed and sealed this 28th day of April 1964.

(SEAL)
Attest:

ERNEST W. SWIDER
Attesting Officer

EDWARD J. BRENNER
Commissioner of Patents