May 7, 1963 E. J. SVENSON 3,088,198

APPARATUS FOR ASSEMBLING AND TESTING PUMP PARTS

Filed Sept. 11, 1958 6 Sheets-Sheet 1

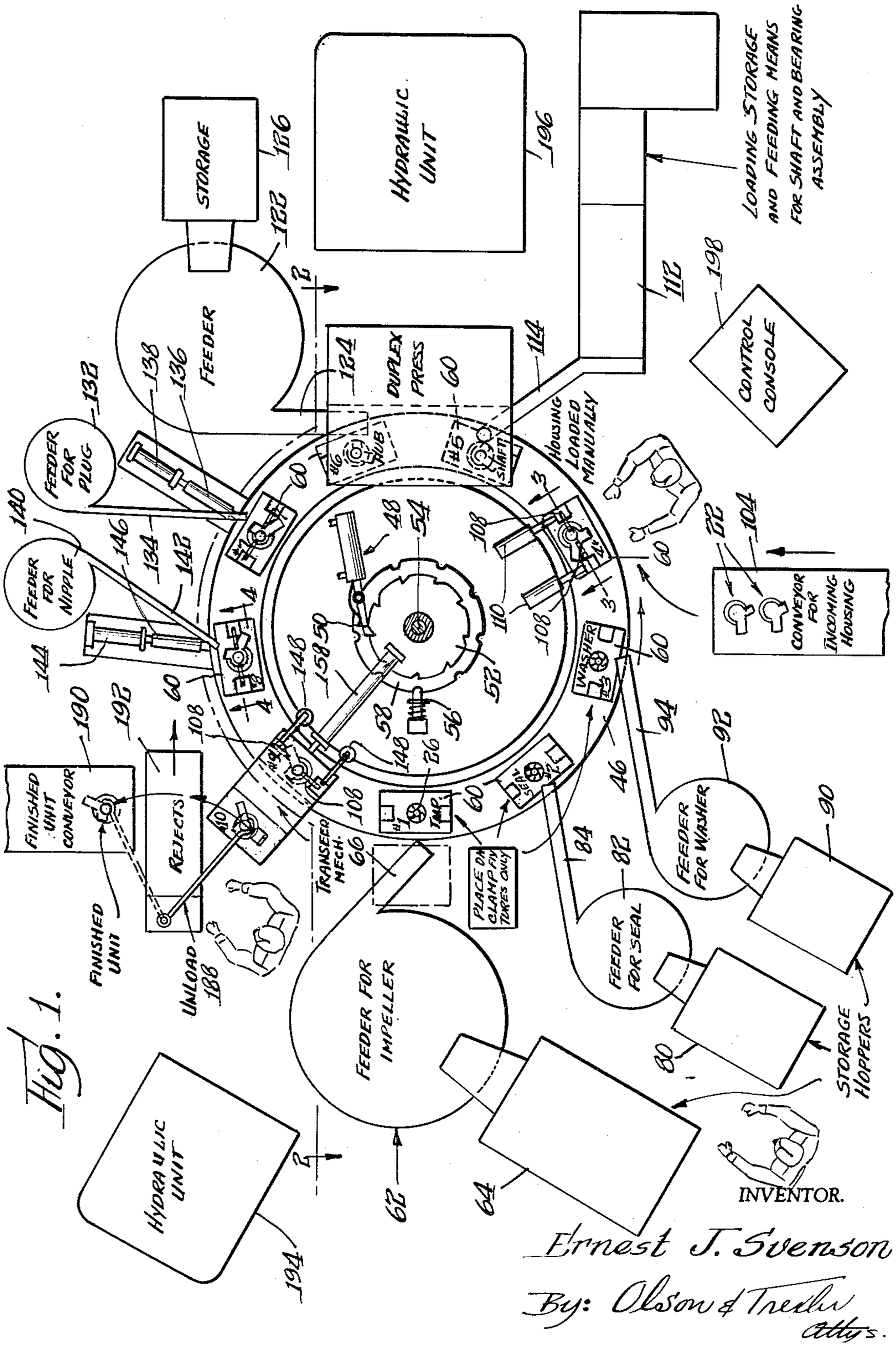

Fig. 1.

INVENTOR.

Ernest J. Svenson

By: Olson & Trexler

Atty's.

May 7, 1963 E. J. SVENSON 3,088,198

APPARATUS FOR ASSEMBLING AND TESTING PUMP PARTS

Filed Sept. 11, 1958 6 Sheets-Sheet 2

Fig. 2.

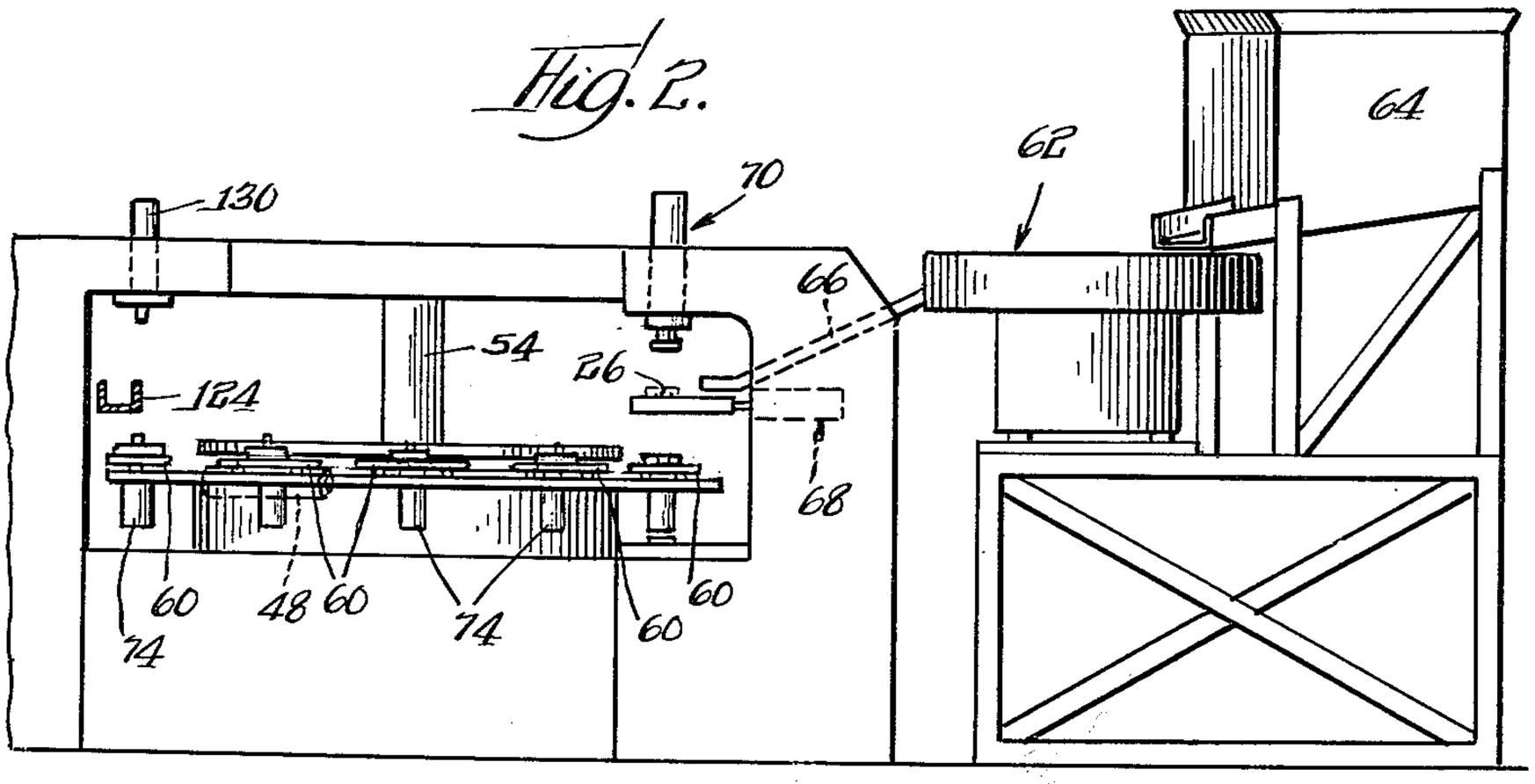

Fig. 3.

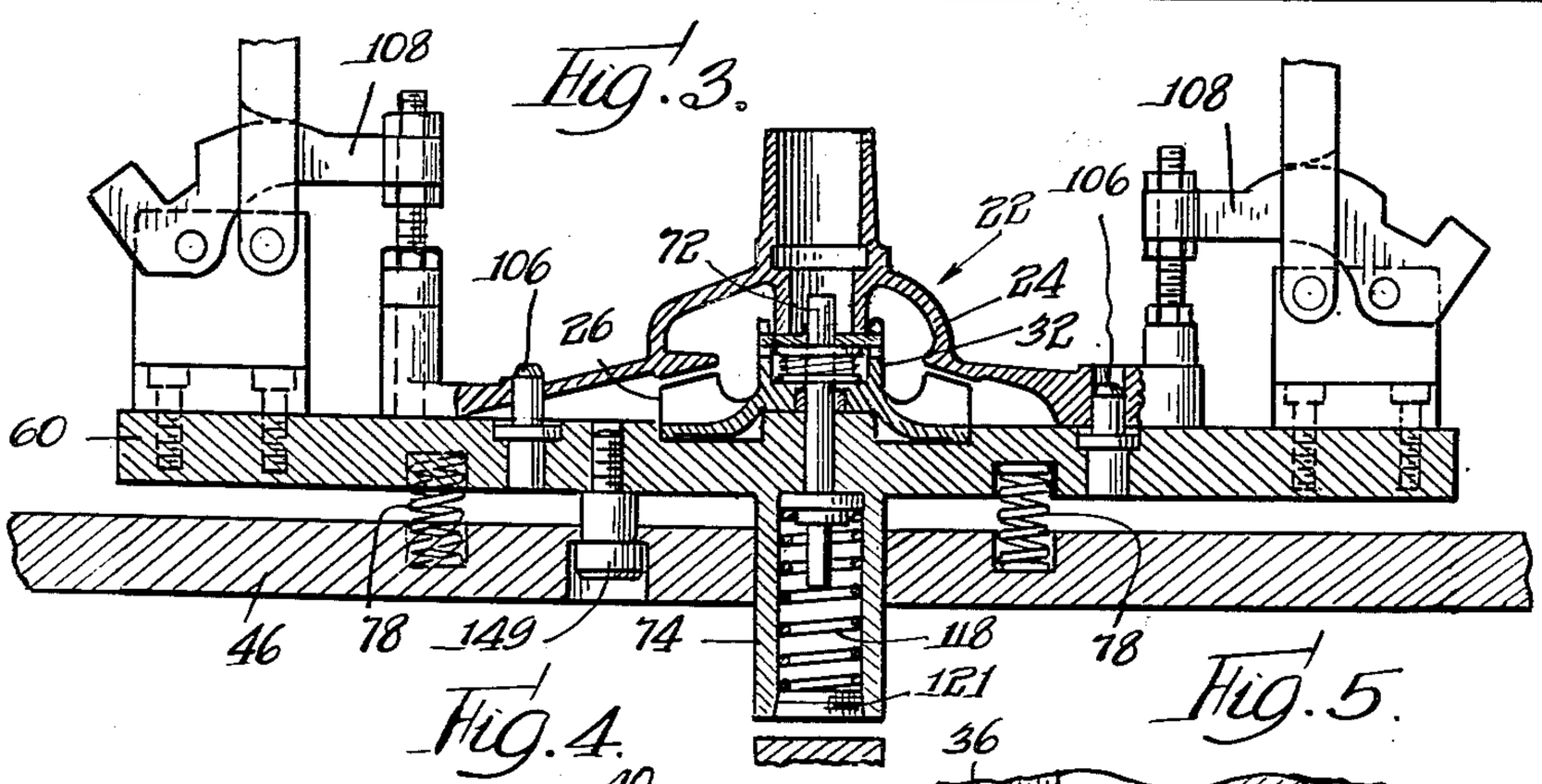

Fig. 4.

Fig. 5.

Fig. 6.

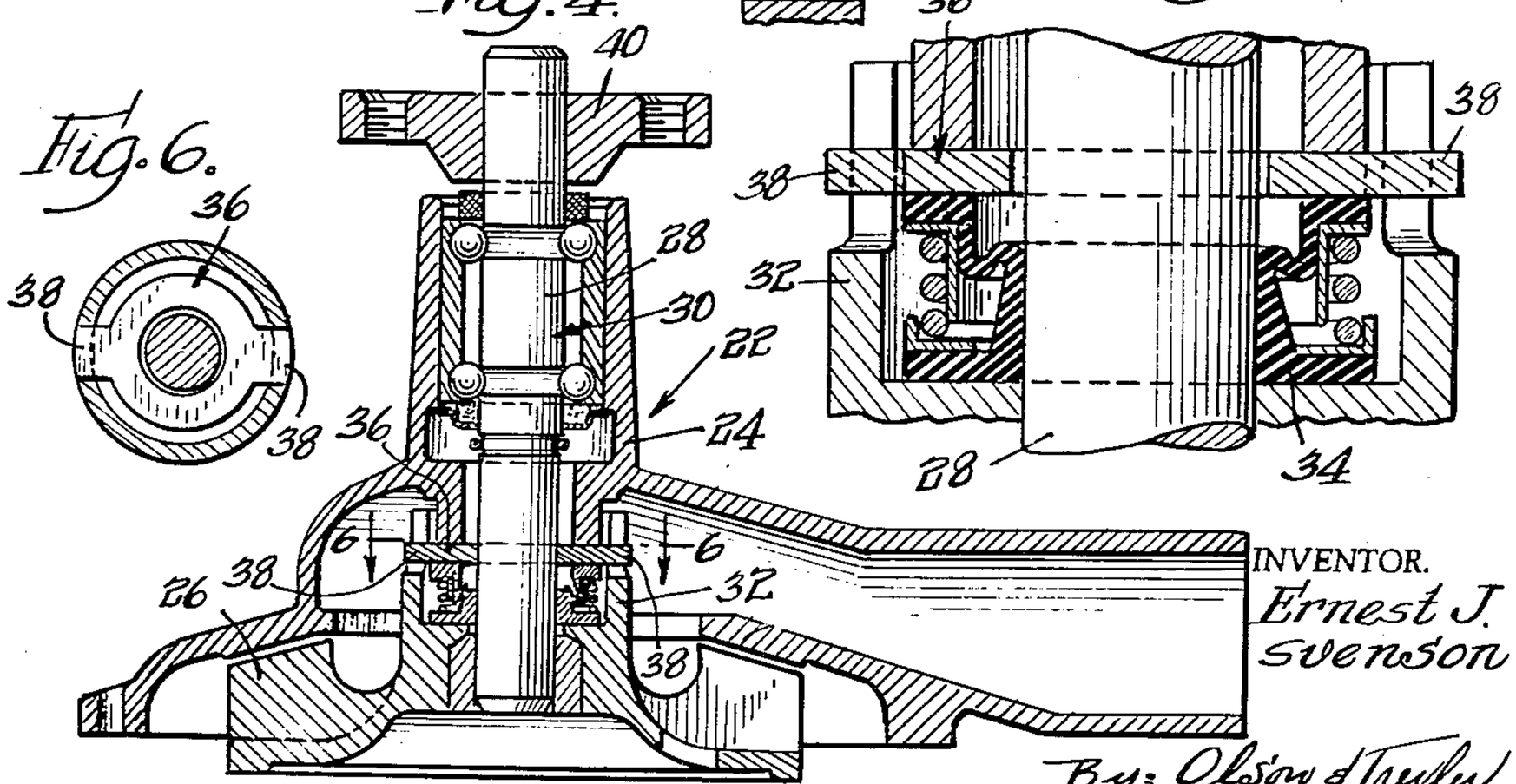

INVENTOR.
Ernest J. Svenson

By: Olson & Trueblood Attys.

May 7, 1963 E. J. SVENSON 3,088,198

APPARATUS FOR ASSEMBLING AND TESTING PUMP PARTS

Filed Sept. 11, 1958 6 Sheets-Sheet 3

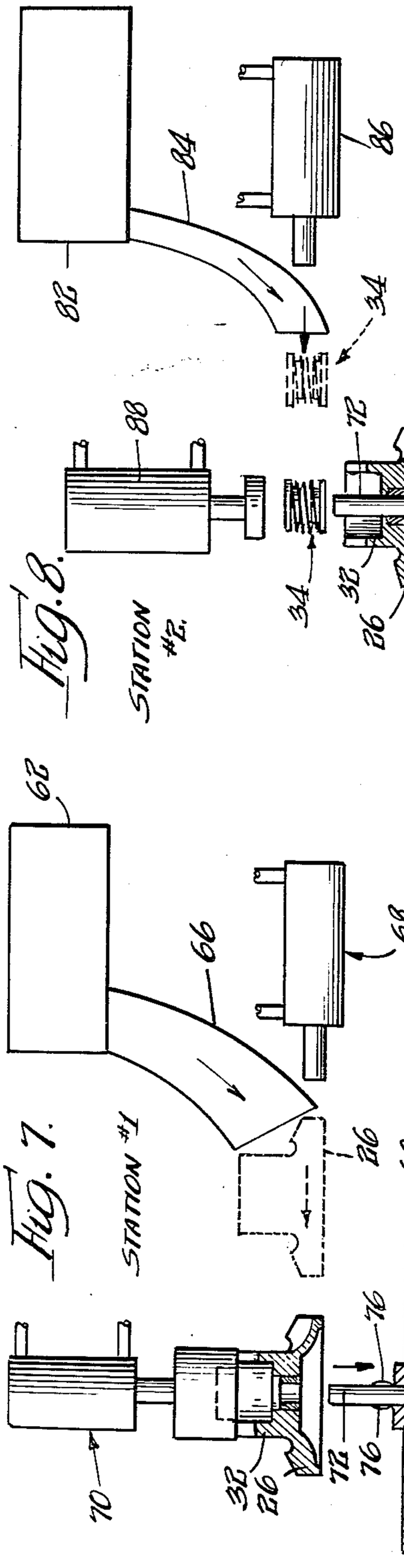

Fig. 7.

Fig. 8.

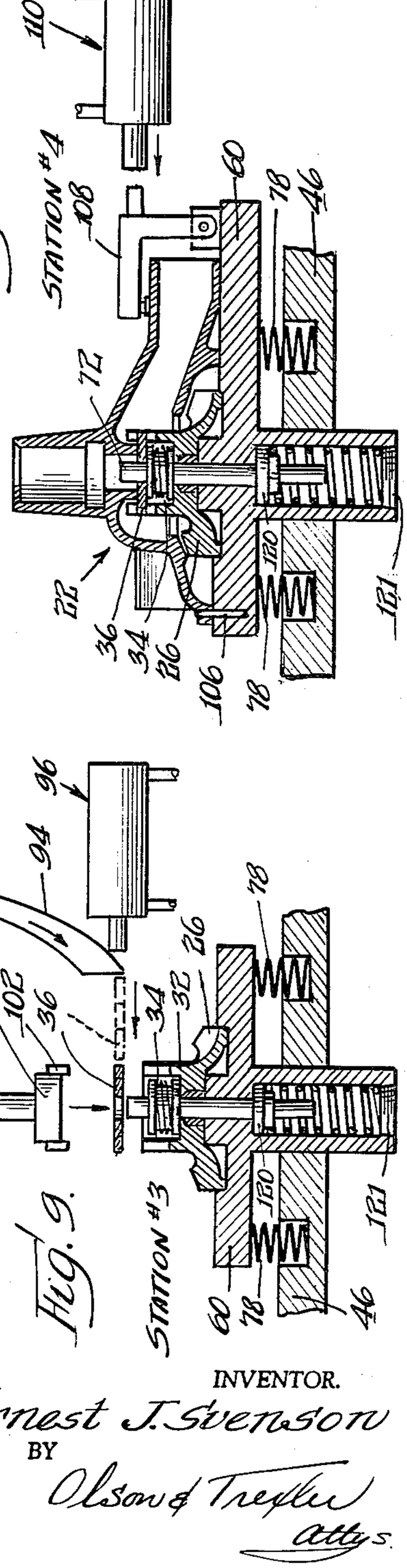

Fig. 10.

Fig. 9.

INVENTOR.
Ernest J. Svenson
BY
Olson & Trexler
Attys.

May 7, 1963 E. J. SVENSON 3,088,198

APPARATUS FOR ASSEMBLING AND TESTING PUMP PARTS

Filed Sept. 11, 1958 6 Sheets-Sheet 4

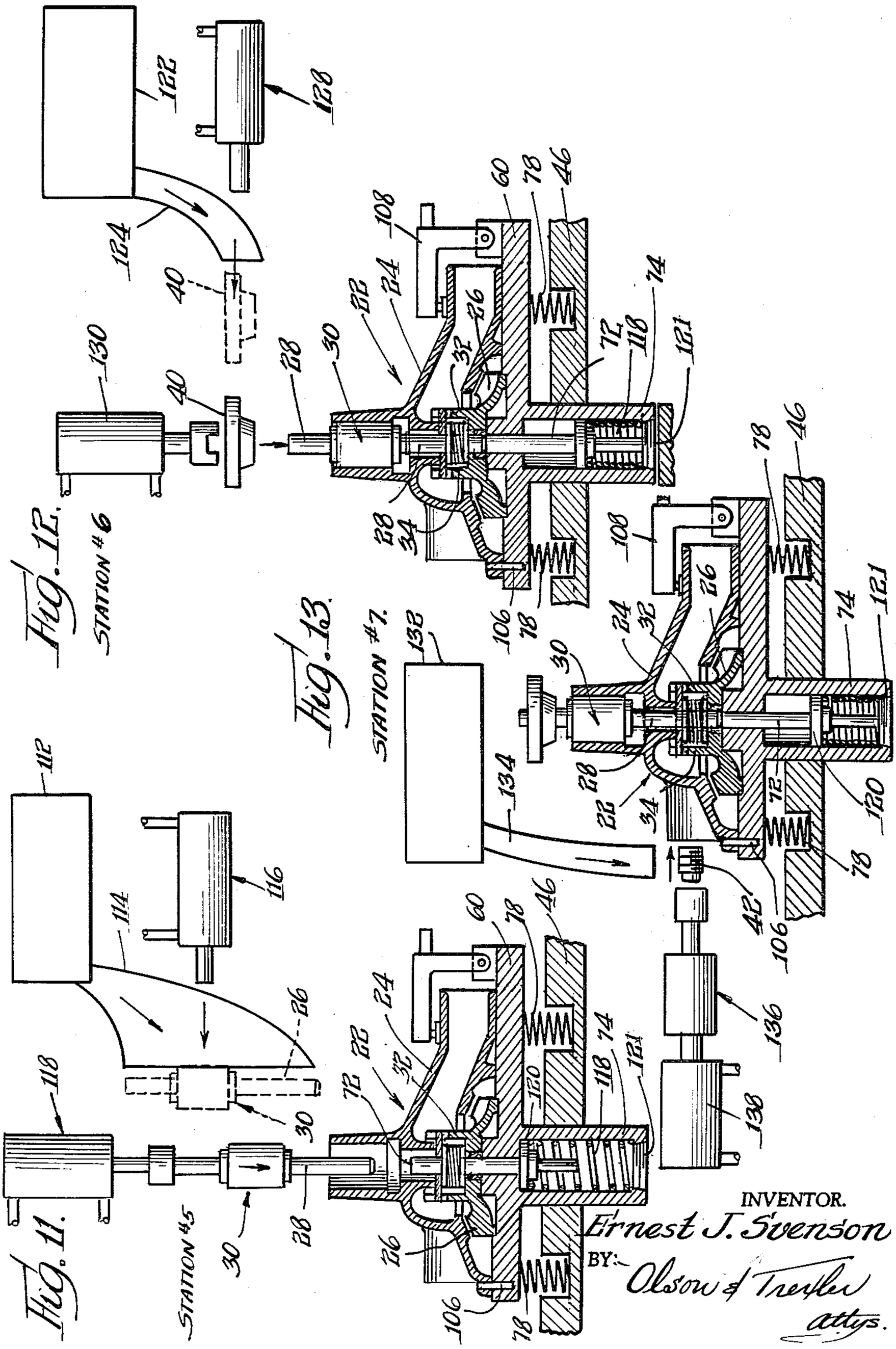

Fig. 12.

Fig. 13.

Fig. 11.

INVENTOR.
Ernest J. Svenson
BY: Olson & Trevlor
attys.

May 7, 1963 E. J. SVENSON 3,088,198

APPARATUS FOR ASSEMBLING AND TESTING PUMP PARTS

Filed Sept. 11, 1958 6 Sheets-Sheet 5

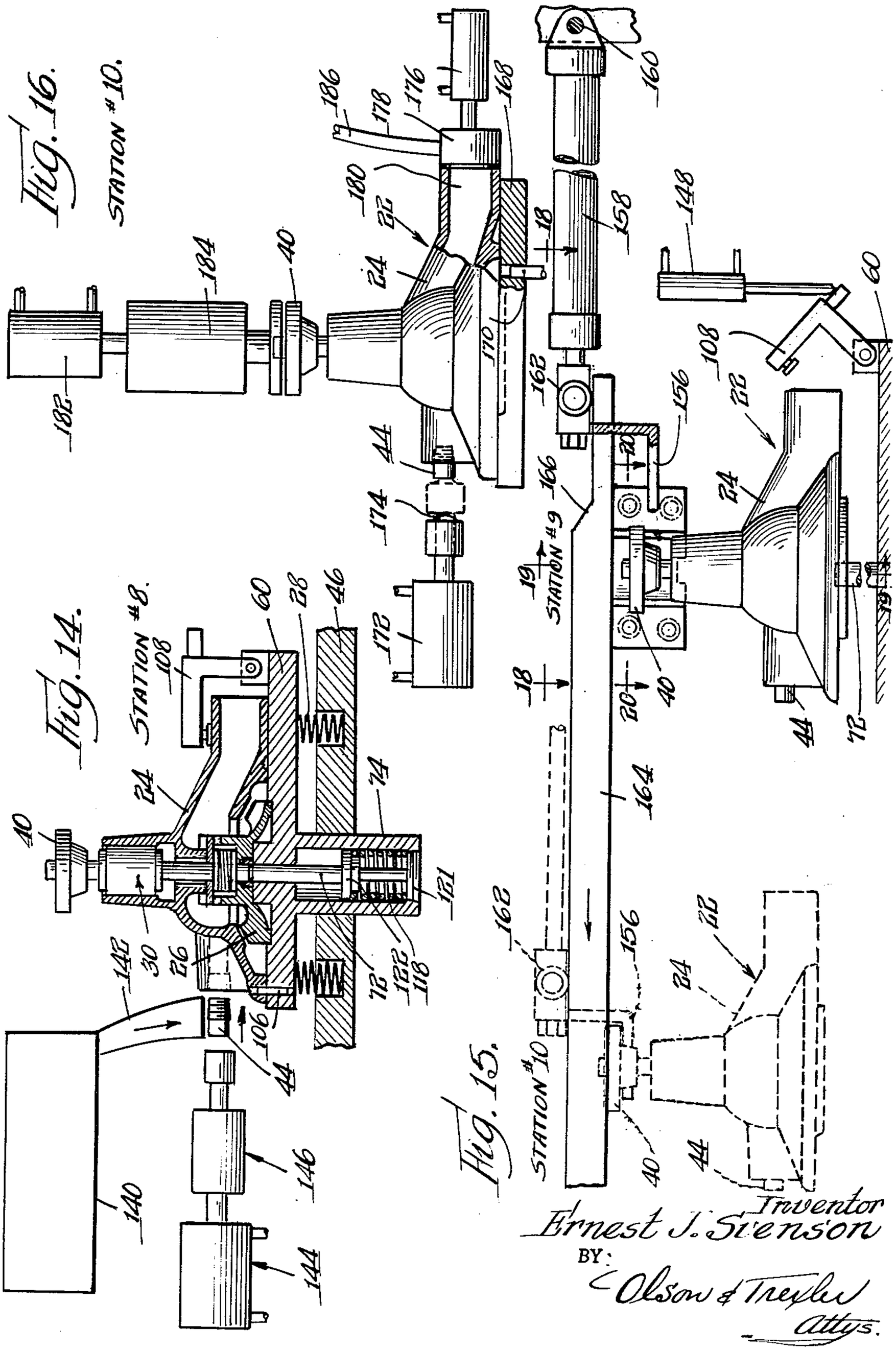

May 7, 1963 E. J. SVENSON 3,088,198

APPARATUS FOR ASSEMBLING AND TESTING PUMP PARTS

Filed Sept. 11, 1958 6 Sheets-Sheet 6

Fig. 17.

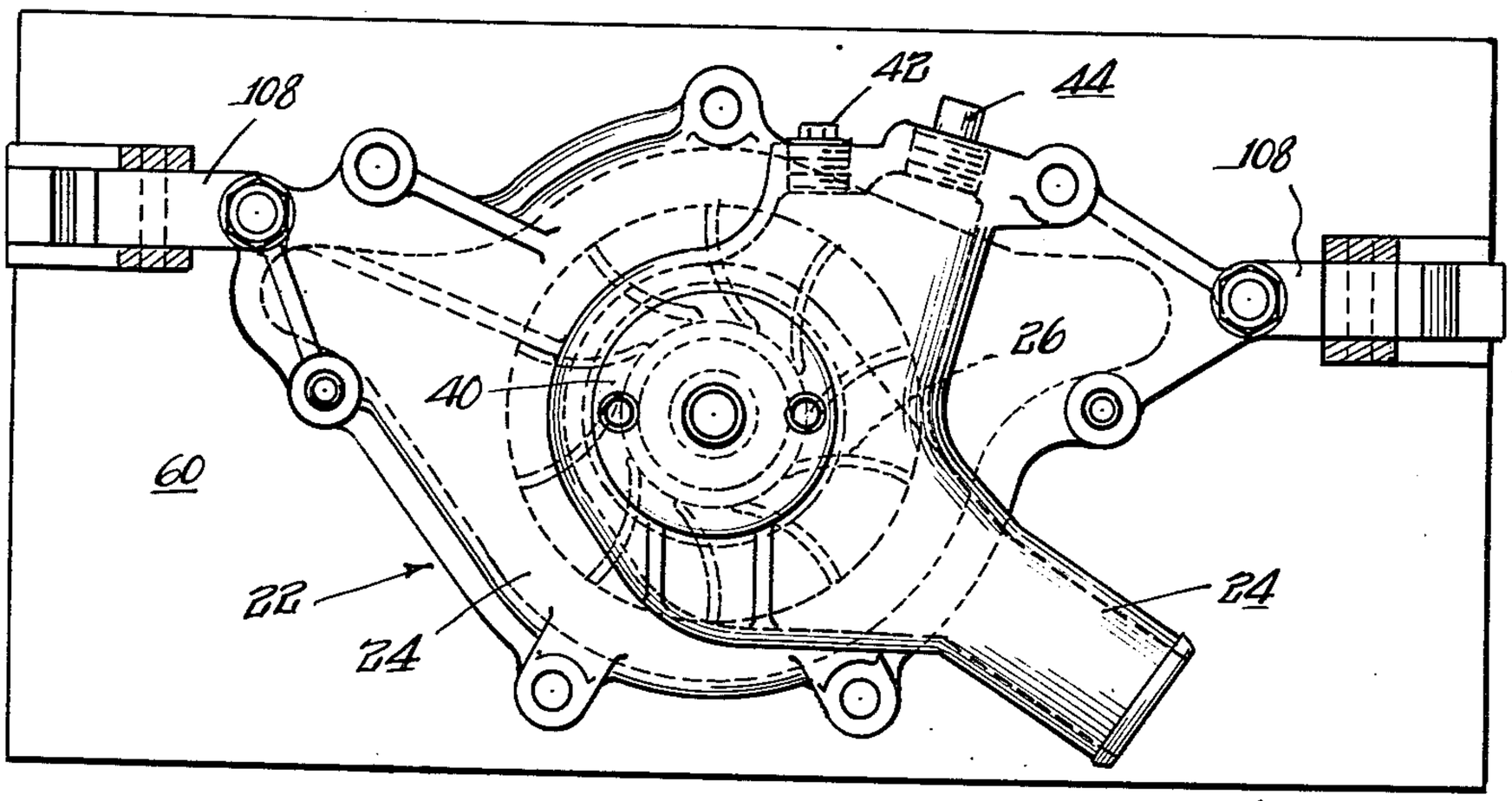

Fig. 18.

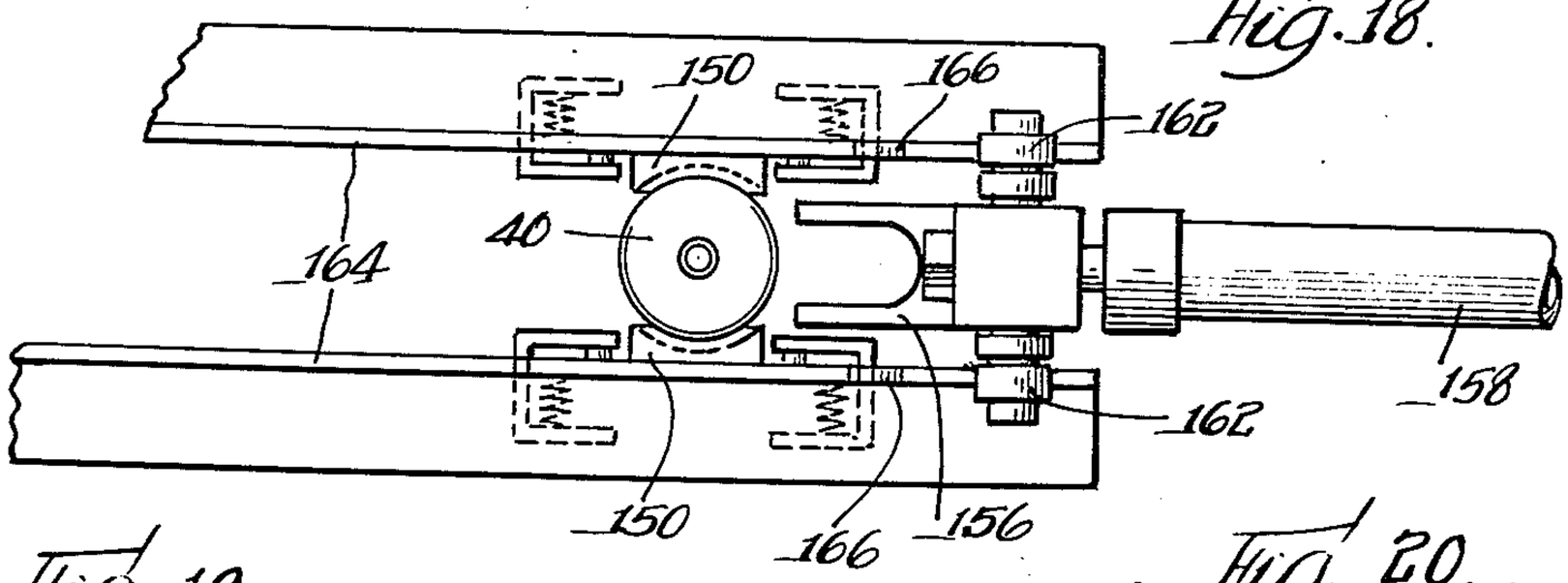

Fig. 19.

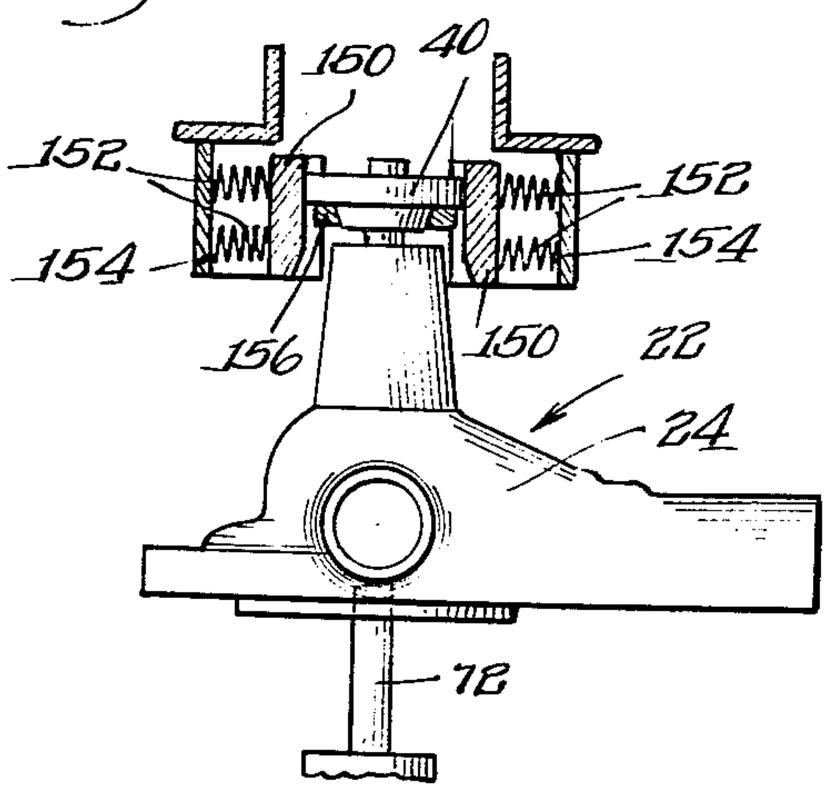

Fig. 20.

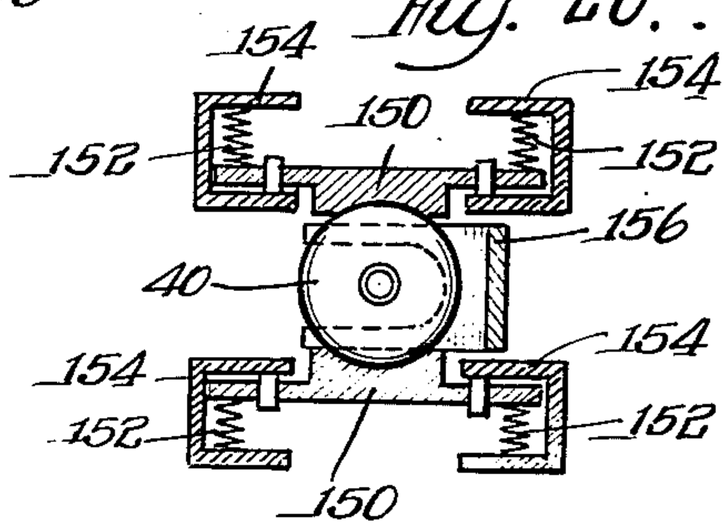

INVENTOR.
Ernest J. Svenson
BY
Olson & Trexler
attys.

United States Patent Office

3,088,198
Patented May 7, 1963

3,088,198
APPARATUS FOR ASSEMBLING AND TESTING PUMP PARTS

Ernest J. Svenson, Rockford, Ill., assignor to Odin Corporation, Rockford, Ill., a corporation of Illinois

Filed Sept. 11, 1958, Ser. No. 760,355
7 Claims. (Cl. 29—208)

This invention relates to improvements in methods and apparatus for assembling and testing parts, and more particularly to an apparatus for assembling the constituent parts of water pumps, as, for example, water pumps of the type used in automobiles, trucks, and vehicles of like nature.

Production line methods have, for a number of years, been used to reduce the cost to the ultimate consumer of such devices as automobiles, refrigerators, radio, and television equipment, and the like. The present invention contemplates further reduction in cost to the ultimate consumer of devices in which a water pump forms a part of the general combination. It has heretofore been common procedure in assembling devices such as water pumps, to practice methods of assembly which are not consistent with the principle of low cost to the consumer. It is, therefore, one of the primary objects of the present invention to provide an apparatus which will insure a high degree of efficiency in the assembly and testing of water pumps, and the like.

Water pumps of the type contemplated by the present invention consist of a number of parts, such as a pump housing, impeller, seals, retaining washer, shaft and bearing assembly, pulley hub, pipe plug, and water by-pass nipple. Heretofore, manual assembly of the parts just enumerated has not proven to be efficient, and the present invention contemplates an apparatus whereby such parts may be assembled with a minimum amount of manual effort and within limited floor space. To this end, the invention contemplates the intermittent advancement of various parts, beginning with the pump housing, along a predetermined path from one station to another, whereby to accomplish expeditiously and economically the assembly and ultimate testing of the pump structure.

It is a further object of the present invention to accomplish the assembly and testing of pump structures by directing constituent parts into the above mentioned predetermined path, shifting such parts into their proper assembled relation during periods of intermittent dwell and finally subjecting the assembled parts to operational testing after removing the pump structure from said predetermined path.

It is a further object of the present invention to employ as far as possible, standardized equipment at the various stations of assembly and, thus, reduce to a minimum added costs which would otherwise result when specially designed equipment is employed.

The foregoing and other objects and advantages will be more apparent from the following detailed description when considered in connection with the occompanying drawings wherein:

FIG. 1 is a plan diagrammatic view of apparatus which may be employed in the practice of methods contemplated by the present invention;

FIG. 2 is a fragmentary elevational view taken substantially along the line 2—2 of FIG. 1;

FIG. 3 is an enlarged vertical sectional view taken along the line 3—3 of FIG. 1, showing the position occupied by the pump housing after it has been delivered to and located upon a supporting fixture;

FIG. 4 is a vertical sectional view taken along the line 4—4 of FIG. 1 at Station No. 8, more clearly to illustrate the assembled relation of constituent parts of the

pump, such as the housing, impeller, seal, shaft and bearing assembly, and pulley hub;

FIG. 5 is an enlarged sectional view of the seal and retaining washer as shown in FIG. 4, more clearly to illustrate the physical nature of the seal per se;

FIG. 6 is a detailed horizontal sectional view taken substantially along the line 6—6 of FIG. 4, to show how the opposed peripheral lugs of the retaining washer cooperate with the hub portion of the impeller;

FIG. 7 is a semi-diagrammatic vertical sectional view at Station No. 1, illustrating the manner in which impellers are fed into position for subsequent assembly with the pump housing at a subsequent station;

FIG. 8 is also a semi-diagrammatic vertical sectional view at Station No. 2, illustrating the manner in which seal devices are delivered into proper position and telescopically associated within the hollow hub portion of the pump impeller which had previously been delivered to Station No. 1;

FIG. 9 is a semi-diagrammatic view similar to FIGS. 7 and 8 at Station No. 3, illustrating mechanism for shifting retaining washers into proper position and subsequently, telescopically assembled with the hollow hub of the impeller so as to secure in position the seal previously delivered at Station No. 2;

FIG. 10 is a semi-diagrammatic view in vertical section at Station No. 4, illustrating the manner in which a pump housing is associated with the impeller after the aforesaid seal and retaining washer have been applied to the impeller;

FIG. 11 is a semi-diagrammatic vertical sectional view at Station No. 5, to illustrate the manner in which shaft and bearing assemblies are brought into preliminary assembled relation with the pump housing;

FIG. 12 is a view similar to FIG. 11 taken at Station No. 6, disclosing the association of the pulley hub with the shaft and bearing assembly previously assembled with the housing at Station No. 5;

FIG. 13 is, likewise, a semi-diagrammatic vertical sectional view at Station No. 7, illustrating the assembly of a pipe plug with the pump housing;

FIG. 14 is a view similar to FIG. 13 and is taken at Station No. 8 to illustrate the assembly with the pump housing of a water by-pass nipple at Station No. 8;

FIG. 15 illustrates the mechanism for transferring a previously assembled pump structure from Station No. 9 to Station No. 10 after the pump housing has been unclamped from its supporting fixture;

FIG. 16 illustrates the manner in which the completely assembled pump structure is subjected to testing at Station No. 10, from which station defective pumps are delivered to a reject point and satisfactory pumps are delivered to a conveyor;

FIG. 17 is a plan view of a completely assembled pump as supported and clamped upon its fixture prior to delivery to the testing station;

FIG. 18 is a plan view of the pump shifting mechanism illustrated in FIG. 15, said view being taken substantially along the line 18—18 of FIG. 15;

FIG. 19 is a detailed sectional view of the clamping mechanism for supporting a completed assembled pump structure prior to its being shifted from Station No. 9 to Station No. 10, said view being taken substantially along the line 19—19 of FIG. 15, with the pump structure shown in elevation; and

FIG. 20 is a detailed sectional view of the aforesaid clamping mechanism taken along the line 20—20 of FIG. 15.

Referring now to the drawings more in detail, wherein like numerals have been employed to designate similar parts throughout the various views, it is deemed advis-

able to facilitate understanding of the present invention to describe one form of water pump of the type capable of being assembled by practicing the method contemplated hereby. It will be seen from a number of the figures that the pump is designated generally by the numeral **22**. This pump **22** includes a pump housing or casting **24** which encloses an impeller **26**. The impeller **26** is carried by a shaft **28** of a shaft and bearing assembly designated generally by the numeral **30**, FIGS. 11 to 13, inclusive. Also carried within a hollow hub portion **32** of the impeller **26** is a sealing device **34**, best shown in FIG. 5. This sealing device **34** is held in place within the hub extension portion **32** of the impeller by a retaining member or washer **36** (see FIGS. 4 to 6, inclusive). The washer **36** is provided with oppositely disposed peripheral lugs **38**, which are lodged within the complementary recesses provided in the hub portion **32**. The outer extremity of the shaft **28** carries a pulley hub **40**; and as shown in FIGS. 13 to 17, inclusive, there is associated with the pump housing **24** a pipe plug **42** and a bypass nipple **44**.

The present invention contemplates improved methods and apparatus whereby the pump parts referred to above may be assembled into a complete pump structure, and this complete pump structure tested under operating conditions with a minimum amount of effort and skill on the part of an operator and with the expenditure of a minimum amount of time. Referring to FIG. 1, it will be seen that one form of apparatus for assembly and testing pump structures of the type referred to above incorporates an intermittently rotatable table **46**. This table is preferably of annular shape as viewed in plan and is adapted to be shifted intermittently through the agency of a suitable actuating mechanism, such as a hydraulic actuator **48**. This actuator **48** is designed to shift a feed pawl **50** forwardly and rearwardly to impart intermittent movement to the table in the direction indicated by the directional arrow in FIG. 1. The pawl **50** is adapted to engage a ratchet member **52** supported by a vertical shaft **54**. As the pawl **50** reaches the limit of its forward movement, a suitable spring pressed index pin **56** interlocks with a complementary recess in a disc member **58** so as to secure the table **46** in a fixed position during the retracting stroke of the pawl **50**. It is this forward actuating movement of the pawl **50** which causes the table **46** to be intermittently advanced so as to move a work holding fixture or plate **60** from one station to another, these stations being indicated as stations numbered from 1 to 9. It is during the dwell of the table **46** occasioned during the retracting stroke of the pawl **50** that the various assembly and testing operations about to be described, take place.

Station No. 1

At Station No. 1, an impeller **26** is delivered to a complementary fixture plate **60** from a suitable impeller feeder designated, generally, by the numeral **62**. This feeder may be of any conventional design adapted to supply parts down a chute to a position of association with the fixture **60**. A hopper **64** of conventional design may be used to keep the feeder mechanism **62** supplied with impeller parts. Referring to FIG. 7, it will be noted that the invention contemplates the direction of impeller parts from the feeder **62** through a chute **66**. In the vicinity of the bottom of the chute **66** is a hydraulic actuating device or mechanism **68**, which, at the proper interval of time, moves forwardly to shift an impeller located in the vicinity of the bottom of the chute (dotted line position) to the solid line position immediately beneath a second hydraulic actuator **70**. This hydraulic actuator **70** is employed to push the impeller **26** downwardly into telescopic association with an upwardly projecting pin **72**. This pin **72** is shiftedly supported within the fixture plate **60** and is resiliently urged upwardly within a depending portion **74** through the agency of a coil spring, the function of which will be more apparent as the description progresses. Suitable, oppositely disposed lugs **76** carried by the pin **72** (see FIG. 7) cooperate in properly locating the impeller **26** as it is shifted from the position shown in FIG. 7 to the position shown in FIG. 8. It will be noted that the fixture plate **60** is resiliently mounted upon the table **46** by means of coil springs **78**. Having telescopically associated the impeller **26** with the pin **72**, the plate **60** is now ready to be advanced from Station No. 1 to Station No. 2.

Station No. 2

At Station No. 2 (see FIGS. 1 and 8), a supply of sealing devices **34** is maintained within a suitable hopper **80**. From the hopper **80**, these seal devices are supplied to a conventional feeder device **82**. This feeder device includes a suitable chute **84** for directing seals **34** to the dotted line position shown in FIG. 8. From this position, a conventional hydraulic actuator **86** is adapted to shift the seal to the solid line position, in coaxial alignment with the previously mentioned pin **72** on one side and a hydraulic actuator **88** on the opposite side. Advancing movement of the actuator **88** causes the seal **34** to be telescopically associated with the pin **72** so as to occupy the position illustrated in FIG. 9. In this position, the seal **34** is held within the hollow hub portion **32** of the impeller **26**. The impeller and associated seal are now in readiness to be moved from Station No. 2 to Station No. 3 in response to the functioning of the aforementioned hydraulic actuator **48**.

Station No. 3

At Station No. 3, a hopper **90** retains a supply of retaining washers **36**. These washers are supplied to a conventional feeder mechanism **92**, and are directed by a chute **94** to the dotted line position illustrated in FIG. 9. From this position the retaining washer may be advanced by a hydraulic actuator **96** from the dotted line position to the solid line position illustrated in FIG. 9. In this latter position, the retaining washer **36** is located in axial alignment with the pin **72** and a hydraulic actuator **98**. The hydraulic actuator **98** carries an actuating member or head **100**, which is equipped with oppositely disposed lugs **102**. As these lugs move downwardly, they are brought into engagement with complementary oppositely disposed lug portions **38** (see FIG. 6) of the retaining washer so as to move said lug portions into registration with complementary recesses in the wall of the impeller hub **32**. During this step in the operation, the retaining washer is pressed against the upper or outer side of the seal device **34**, as clearly shown in FIG. 10. With the retaining washer **36** thus assembled with the impeller hub **32**, the supporting fixture **60** is advanced from Station No. 3 to Station No. 4.

Station No. 4

As illustrated in FIG. 1, an operator removes a pump housing **22** from a conveyor **104** and places the housing in superimposed relation with respect to the impeller **26** and parts previously assembled therewith. Thus, as shown in FIG. 10, the housing **22** is manually located by dowels **106**. In this position, the housing is in readiness to be clamped against the supporting fixture **60** by a suitable clamping device designated, generally, by the numeral **108**. In FIG. 3, the clamping device **108** is disclosed more in detail. To shift the pivotally mounted clamping device **108** from unclamped to clamped position, a conventional hydraulic actuator mechanism **110** may be employed. As the piston of this actuator advances, it is brought into engagement with the clamping device **108** so as to firmly clamp the housing in position upon the plate **60**. In fact, it is preferred to employ a pair of clamping devices and consequently, a pair of hydraulic actuators, as shown in FIG. 1. With the housing properly located with respect to the impeller, seal, and retaining washer as shown in FIG. 10, the supporting fixture plate **60** may now be shifted so as to advance it to Station No. 5.

Station No. 5

At Station No. 5, shaft and bearing assemblies **30** are directed from a feeder **112** through a chute **114** to the dotted position shown in FIG. 11. From this position, a hydraulic actuator **116** is adapted to shift the assembly **30** into axial alignment with a bearing section of the pump housing **24** and a hydraulic actuator **118**. The actuator **118** serves to move the assembly **30** downwardly into telescopic association with the bearing section of the housing **24**. As the shaft **28** of the assembly **30** moves downwardly into the pump housing, it is brought into engagement with the upper extremity of the pin **72** and forces the pin **72** downwardly so as to eject it from telescopic association with the retaining washer **36** and the seal **34**. The pin **72**, when thus shifted by the shaft **28** of the assembly **30**, compresses a coil spring **118** interposed between a collar **120** secured to the pin **72** and a threaded plug **121**. In other words, the pin **72** is moved downwardly against the yieldable resistance of the spring **118**. In this manner, the shaft and bearing asesmbly **30** is ultimately shifted to its position of final assembly with the pump housing, as shown in FIG. 12. The forced fit of the bearing portion of the assembly **30** within the complementary wall portion of the pump housing is sufficient to prevent the force of the spring **118** from dislodging the assembly from the housing. With the assembly **30** thus associated with the pump housing, the pump structure is in readiness to be shifted to Station No. 6.

Station No. 6

At Station No. 6 (see FIGS. 1 and 12), pulley hub members **40** are directed from a suitable feeder **122** through a chute **124**. Conventional storage means, FIG. 1, serves to retain a supply of hub members **40** for delivery to the feeder **122**. A hydraulic actuator **128** serves to shift hub members **40** from the dotted to the solid line position shown in FIG. 12. A hydraulic actuator **130** then functions to telescopically associate the hub member **40** with the exposed portion of the shaft **28** of the assembly **30**. With the hub member **40** thus forced into position upon the shaft **28**, the pump structure may now be shifted to Station No. 7, through the agency of the actuator **48** which operates the pawl **50** previously described.

Station No. 7

At Station No. 7, FIG. 13, water plugs are directed from a suitable feeder **132** through a chute **134** into axial alignment with a torque wrench mechanism designated, generally, by the numeral **136**. This mechanism **136** may be of the conventionally rotatable overload release type; and as it is moved forwardly during the rotation thereof by a suitable hydraulic actuator **138**, the head of the plug **42** is engaged so as to cause the plug to be screwed into a complementary aperture in the pump housing. Upon retraction of the torque mechanism **136** following the proper positioning of the plug **42**, the assembled pump unit may be shifted to Station No. 8.

Station No. 8

At Station No. 8 (see FIGS. 1 and 14), water by-pass nipples **44** are directed from a suitable feeder mechanism **140** through a chute **142** to the position in FIG. 14. A hydraulic actuator **144** then functions to move a conventional rotatable torque wrench mechanism **146** to the right, FIG. 14, into engagement with the head of the water by-pass nipple **44**. This causes the nipple **44** to be screwed into a complementary threaded aperture in the pump housing. After the nipple **44** has been secured in position, actuator **144** serves to retract the torque wrench mechanism **146**, and the pump unit is now ready to be shifted to Station No. 9. All of the constituent elements of the pump have now been assembled and the device is ready for testing.

Station No. 9

At Station No. 9, FIG. 15, the previously assembled pump structure must be unclamped from the supporting fixture or plate **60**. This is accomplished by hydraulic actuators **148** (see FIGS. 1 and 15). These hydraulic actuators **148** function simultaneously so as to engage the clamp structures **108**, as illustrated in FIG. 15. This causes the clamps **108** to become disengaged from the pump housing **24**, thus permitting the coil spring **118** to urge the pin **72** upwardly. The upward movement of the pin **72** causes the pump housing **24** to become disengaged from the locating pins **106**, and the pulley hub **40** is forced between a pair of clamp jaws **150** (see, particularly, FIGS. 18 to 20, inclusive). The extent of upward movement of the supporting fixture or means **60** is limited by the head of a pin **149** (FIG. 3). These clamping jaws **150** are resiliently urged toward each other by coil springs **152** housed within a frame structure **154**. The entire pump unit has now been elevated to a position which will permit a fork member **156** to pass beneath the flange poriton of the pulley hub **40**. The advancement of the fork **156** is accomplished by a suitable hydraulic actuator **158**. This actuator **158** is pivotally supported at **160**, FIG. 15, and the opposite portion of the actuator, namely, the piston rod, carries a pair of rollers **162**. As these rollers **162** advance along the upper surfaces of elongated cam or rail members **164**, they are eventually brought into contact with the rise **166** of said cam members. At this point, the fork **156** has reached a position beneath the pulley hub **40** and, thus, the entire pump structure is elevated sufficiently to clear the upper projecting portion of the pin **72**. Continued advancement of the fork **156** causes the pulley hub **40** to be disengaged from the clamping jaws **150** and ultimately shifted to the dotted position shown in FIG. 15. At this position, the housing has become located at Station No. 10 in readiness for testing.

Station No. 10

As the fork **156** is disengaged from the pulley hub **40** upon the return stroke of the actuator **158**, the pump structure is brought to rest upon a plate **168**, FIG. 16. This plate **168** functions in the nature of a sealing plate and carries a water inlet conduit **170**. As the pump structure is located in this position, a hydraulic actuator **172** function to move a sealing member **174** into sealing engagement with the outer extremity of the water by-pass nipple **44**. Simultaneously, a second hydraulic actuator **176** causes a sealing and water conducting head **178** to be sealed against the outlet passages **180** of the pump structure. A third hydraulic actuator **182** causes a rotary torque mechanism **184** to be moved downwardly into driving engagement with the pulley hub **40**. This causes the pump to be rotated at its required speeds, and water directed through the inlet conduit **170** and outlet conduit **186** is subjected to normal operating conditions. If the pump meets the required high and low pressure tests, the completely assembled structure is now in readiness to be shifted by a suitable unloading position designated, generally, by the numeral **188**, FIG. 1, to a finished unit conveyor **190**. If the pump, as tested, does not meet the prescribed requirements for test, it is shifted to a reject conveyor **192**. By having the pressure testing conducted at a point spaced outwardly from the path of movement taken by the pump parts during the assembly thereof, splash and drain conditions incident to the testing operation does not interfere or in any way contaminate the parts being assembled at the various stations along the predetermined path of assembly. Various conventional pressure responsive and indicating devices (not shown) may be employed in performance of the tests.

Obviously, conventional hydraulic units, such as the units **194** and **196** as well as the control console **198** diagrammatically illustrated in FIG. 1, may be used to control the automatic functioning of the mechanisms previously described. It is not necessary for a clear under-

standing of the present invention to include all of the details of such arrangements, and it will suffice to say that the various hydraulic actuators and the like previously described may be automatically controlled from a central point in a manner well known to those skilled in this particular art. Applicant is a hydraulic engineer of long standing; and as will appear from many patents which have been issued to him, hydraulic units, actuators and the like, as well as controls therefor, have heretofore been used extensively in instances where sequential, timed functioning of machine elements and the like is required.

From the foregoing, it will be apparent that the present invention makes it possible to perform, in sequence, assembling operations, and finally a testing operation which makes for increased efficiency, as well as accuracy in production. By intermittently moving pump parts along a predetermined path through a series of assembly stations, and finally to a testing station, manual labor is reduced to a minimum, and the entire operation may be carried on within a very limited floor space or area. The latter is of extreme importance in these days of high costs of building construction. Furthermore, the assembly operations or steps previously described may be carried out by unskilled persons, as distinguished from previously known methods and apparatus requiring the use of skilled workmen.

While certain specific disclosures have been made herein, the invention is not, of necessity, limited to such disclosures, but should be construed in the light and within the scope of claims appended hereto.

The invention is hereby claimed as follows:

1. Apparatus for sequentially assembling pumps, comprising, in combination, a rotatable assembly table, a series of circumferentially spaced assembly fixtures mounted on said table, spring means yieldably supporting each of said fixtures, indexing means coacting with said table for intermittently indexing the latter to a succession of angularly spaced positions to locate the individual assembly fixtures in a succession of assembly stations, pump impeller supplying means located at a first of said assembly stations, pump impeller applying means at said first station for applying a pump impeller to the assembly fixture in said first station, each assembly fixture including a yieldably supported depressible impeller locating element, sealing device supply means located at a second of said stations, sealing device applying means at said second station for applying a sealing device to a pump impeller supported by the assembly fixture in said second station, each of said assembly fixtures including housing clamping means, clamp applying means located at a third one of said stations for effecting clamping of a pump housing applied to a pump impeller supported by the assembly fixture in the third station, pump shaft supply means located at a fourth one of said stations, pump shaft applying means at said fourth station for applying a pump shaft to a housing encased pump impeller supported by the assembly fixture in said fourth station, transfer means located at a fifth one of said stations for transferring to a testing station successive assembled pumps moved to the fifth station by said assembly fixtures, pump driving means at said testing station movable into driving relation to an assembled pump in said testing station, and fluid supply and discharge means at said testing station movable into connected relation to a pump in said testing station.

2. Apparatus for sequentially assembling pumps on a mass production basis, comprising, in combination, an interconnected series of assembly fixtures, indexing means for intermittently indexing said fixtures in unison to locate the individual fixtures in successive assembly stations, each of said fixtures including upwardly protruding housing locating means and including a depressible alignment element which protrudes upwardly, impeller supplying means for supplying pump impellers to one of said stations, impeller applying means located at said one station for applying pump impellers into interfitting relation to the alignment elements of successive assembly fixtures moved into said one station, a later one of said stations constituting a housing applying station, pump shaft supplying means mounted to supply pump shafts to a third one of said stations, pump shaft applying means located at said third station for applying pump shafts to successive housing encased pump impellers supported by successive assembly fixtures moved into said third station, pump receiving means disposed in coacting relation to a still later one of said stations to receive assembled pumps moved into said last mentioned station, track means supporting said pump receiving means and extending away from said last mentioned station, hydraulic actuating means operating at said last mentioned station to move said pump receiving means along said track means to transfer successive assembled pumps away from said last mentioned station, and said track means being shaped to effect lifting of said receiving means and the assembled pump supported thereby upwardly from the housing locating means of the associated assembly fixture automatically as an incident to movement of said receiving means along the track means by said actuating means.

3. Apparatus for sequentially assembling and testing pumps comprising, in combination, a rotatable assembly table, an annular series of support fixtures on said table, indexing means coacting with said table to intermittently index the latter rotatably to move said fixtures to successive ones of an annular series of stations, each of said fixtures including a depressible locating plunger spring urged upwardly to a normal position; a plurality of said stations being equipped respectively with impeller supply means, sealing element supply means, washer supply means, pump shaft and bearing supply means, and pulley hub supply means; hydraulically actuated transfer means associated with each of said plurality of stations to transfer parts from the associated supply means into overlying concentric relation to the locating plunger of the fixtures positioned in the associated station, hydraulically actuated pusher means mounted at each of said plurality of stations to move a part from the associated transfer means axially into an assembled position on the fixture in the associated station, pump housing clamping means on each of said fixtures, an intermediate one of said stations constituting a housing assembly station and being equipped with hydraulic actuating means for applying the housing clamping means of the fixtures in the housing assembly station, another one of said stations constituting a transfer station equipped with hydraulically actuated housing clamp releasing means, two yieldably supported pulley hub guide jaws located at said transfer station in elevated positions to receive therebetween the pulley hubs of pump assemblies moved into the transfer station and released by the coacting housing clamping means, a transfer track extending across said transfer station to a testing station out of the annular path of said fixture, a pump assembly transfer fork supported on said track, hydraulic actuating means coacting with said fork to move the latter along said track to transfer pump assemblies from said transfer station to said testing station, said track including a rise therein which effects lifting of a pump assembly from said transfer station by said fork as an incident to transfer of the pump assembly to said testing station, and hydraulically actuated sealing and testing means located in said testing station for coaction with pump assemblies transferred to said testing station.

4. Apparatus for sequentially assembling water pumps, comprising, in combination, a rotary table, an annular series of fixture plates located on said table in circumferentially spaced relation to each other, coiled compression springs yieldably supporting each of said plates on said table, a depressible locating plunger mounted in each fixture plate and being spring urged upwardly to a guiding position projecting above the coacting plate, indexing means coacting with said table to index the latter rotatably to move said plates to successive ones of an annular

series of stations, pump impeller supply means at a first one of said stations, hydraulically operated impeller transfer means at said first station for moving pump impellers from said supply means into overlying coaxial relation to a locating plunger indexed into said first station, hydraulically actuated pusher means in said first station positioned to move impellers downwardly from the impeller transfer means into telescoped relation to the plunger in said first station, seal supply means positioned to supply seals to a second one of said stations, hydraulically actuated transfer means positioned at said second station positioned to transfer seals horizontally into overlying coaxial relation to a locating plunger in said second station, hydraulically actuated pusher means positioned in said second station to move seals downwardly from the seal transfer means into telescoped relation to a locating plunger in said second station, washer supply means positioned in a third one of said stations, hydraulically actuated transfer means positioned at said third station for moving washers horizontally from said washer supply means into overlying coaxial relation to a plunger in said third station, a hydraulically actuated pusher mounted in said third station to move washers into telescoping relation to locating plungers therein, each of said fixture plates including housing locating projections thereon, pump housing clamp means associated with each of said fixture plates, a fourth one of the stations constituting a housing loading station equipped with hydraulic actuating means for operating the housing clamps of fixture plates moved into the fourth station, shaft and bearing feeding means positioned in a fifth one of said stations, hydraulically actuated transfer means mounted in said fifth station for moving shafts and bearings horizontally into overlying coaxial relation to locating plungers indexed into said fifth station; hydraulically actuated pusher means positioned in said fifth station for moving shafts and bearings downwardly into telescoped relation to housings, washers, seals, and impellers located in the fifth station thereby depressing locating plungers in said fifth station, pulley hub feeder means in a sixth one of said stations, hydraulic transfer means for moving said pulley hubs horizontally into coaxial relation to pump shafts in said sixth station, hydraulic pusher means positioned in said sixth station for moving pulley hubs axially into assembled relation to pump shafts, another one of said stations constituting a transfer station in which two pulley hub guide jaws are yieldably mounted in elevated positions, hydraulic clamp release means positioned in said transfer station to release housing clamps therein to effect upward movement into guided relation to said jaws of a pump assembly in said transfer station by the spring urged locating plunger in said transfer station, a transfer fork supported on a track extending across the transfer station to a test station, hydraulic actuating means for moving said transfer fork along said track to move pump assemblies from said transfer station to said test station, said track defining a rise therein alined with said transfer station to effect lifting of a pump assembly from said transfer station for movement to said test station, and pump testing means mounted in said test station for testing pump assemblies moved thereinto.

5. Apparatus for sequentially assembling and testing pumps comprising, in combination, a rotatable assembly table, an annular series of support fixtures on said table, indexing means coacting with said table to intermittently index the latter rotatably to move said fixtures to successive ones of an annular series of stations, each of said fixtures including a depressible locating plunger spring urged upwardly to a normal position; a plurality of said stations being equipped respectively with impeller supply means, sealing element supply means, washer supply means, pump shaft and bearing supply means, and pulley hub supply means; hydraulically actuated transfer means associated with each of said plurality of stations to transfer parts from the associated supply means into overlying concentric relation to the locating plunger of the fixtures positioned in the associated station, hydraulically actuated pusher means mounted at each of said plurality of stations to move a part from the associated transfer means axially into an assembled position on the fixture in the associated station, pump housing clamping means on each of said fixtures, an intermediate one of said stations in said series constituting a housing assembly station and being equipped with hydraulic actuating means for applying the housing clamping means of the fixtures in the housing assembly station, another one of said stations constituting a transfer station equipped with hydraulically actuated housing clamp releasing means, a transfer track extending across said transfer station to a testing station out of the annular path of said fixture, pump assembly transfer means supported on said track, hydraulic actuating means coacting with said transfer means to move the latter along said track to transfer pump assemblies from said transfer station to said testing station, and said track including a rise therein which effects lifting of a pump assembly from said transfer station as an incident to the beginning of transfer movement of the assembly to said testing station.

6. Apparatus for assembling water pumps, comprising, in combination, a rotary table, an annular series of assembly fixtures mounted on said table, a depressible locating plunger mounted in each fixture and being spring urged upwardly to a projecting guiding position, indexing means coacting with said table to index the latter rotatably to move said fixtures through a series of stations, hydraulically operated impeller transfer means at said first one of said stations for moving pump impellers into overlying coaxial relation to a locating plunger indexed into said first station, hydraulically actuated pusher means in said first station positioned to move impellers downwardly from the impeller transfer means into telescoped relation to the locating plunger in said first station, hydraulically actuated seal transfer means positioned in a second one of said stations to transfer seals into overlying coaxial relation to a locating plunger in said second station, hydraulically actuated pusher means positioned in said second station to move seals downwardly from the seal transfer means into telescoped relation to a locating plunger in said second station, hydraulically actuated washer transfer means positioned in a third one of said stations for moving washers into overlying coaxial relation to a plunger in said third station, a hydraulically actuated pusher mounted in said third station to move washers axially into telescoping relation to locating plungers therein, pump housing clamp means associated with each of said fixtures, a fourth one of the stations constituting a housing loading station equipped with hydraulic actuating means for operating the housing clamps of fixtures moved into the fourth station, hydraulically actuated transfer means mounted in a fifth one of said stations for moving shafts and bearings into overlying coaxial relation to locating plungers indexed into said fifth station, hydraulically actuated pusher means positioned in said fifth station for moving a shaft and bearing downwardly against a locating plunger in the fifth station and into assembled positions on a fixture in said fifth station, hydraulic transfer means for moving pulley hubs into coaxial relation to pump shafts in a sixth one of said stations, hydraulic pusher means positioned in said sixth station for moving pulley hubs axially into assembled relation to pump shafts, another one of said stations constituting a transfer station, pump assembly guide means positioned above said transfer station, hydraulic clamp release means positioned in said transfer station to release housing clamps therein to effect upward movement into guided relation to guide means of a pump assembly in said transfer station by the spring urged locating plunger in said transfer station, hydraulically actuated transfer means for moving pump assemblies from said transfer station to a test station removed from the rotary path of said fixtures, and pump test-

ing means mounted in said test station for testing pump assemblies moved thereinto.

7. Apparatus for assembling centrifugal pumps, comprising, in combination, a rotary table, an annular series of assembly fixtures on said table, a depressible locating plunger mounted in each fixture, indexing means coacting with said table to index the latter to move said fixtures through a series of stations, pump impeller feeding means at a first one of said stations, hydraulically actuated pusher means positioned at said first station to move impellers axially into telescoped relation to the plunger in a fixture in said first station, seal feeding means positioned to feed impeller seals to a second one of said stations, hydraulically actuated pusher means positioned in said second station to move seals axially into telescoped relation to a locating plunger in said second station, washer supply means positioned in a third one of said stations, a hydraulically actuated pusher mounted in said third station to move washers into telescoping relation to locating plungers therein, pump housing clamp means associated with each of said fixtures, a fourth one of the stations constituting a housing loading station equipped with hydraulic actuating means for operating the housing clamps of fixtures moved into said fourth station, shaft and bearing feeding means positioned in a fifth one of said stations; hydraulically actuated pusher means positioned in said fifth station for moving shafts and bearings axially into telescoped relation to housing washers, seals, and impellers located in said fifth station,

pulley hub feeding means in a sixth one of said stations, hydraulic pusher means positioned in said sixth station for moving pulley hubs axially into assembled relation to pump shafts, another one of said stations constituting a transfer station equipped with hydraulic clamp release means for releasing the housing clamps on fixtures moved into the transfer station, hydraulically actuated transfer means for moving pump assemblies from said transfer station to a test station removed from the path of said fixtures, and pump testing means mounted in said test station for testing pump assemblies moved thereinto.

References Cited in the file of this patent

UNITED STATES PATENTS

2,191,917	Sheldrick	Feb. 27, 1940
2,207,371	Blackmore	July 9, 1940
2,297,950	Flaws	Oct. 6, 1942
2,339,807	Rau	Jan. 25, 1944
2,380,742	Flaws	July 31, 1945
2,431,279	Remington	Nov. 18, 1947
2,620,553	Schultz	Dec. 9, 1952
2,734,258	Schultz	Feb. 14, 1956
2,746,132	Oliver	May 22, 1956
2,753,619	Franklin	July 10, 1956

OTHER REFERENCES

"New Techniques Build '57 Cars," American Machinist, pages 145–147, November 5, 1956.