Nov. 14, 1961 E. E. LAKSO 3,008,564

FAST ACTION SHIFTING DEVICE

Filed Dec. 31, 1958

FIG. 1

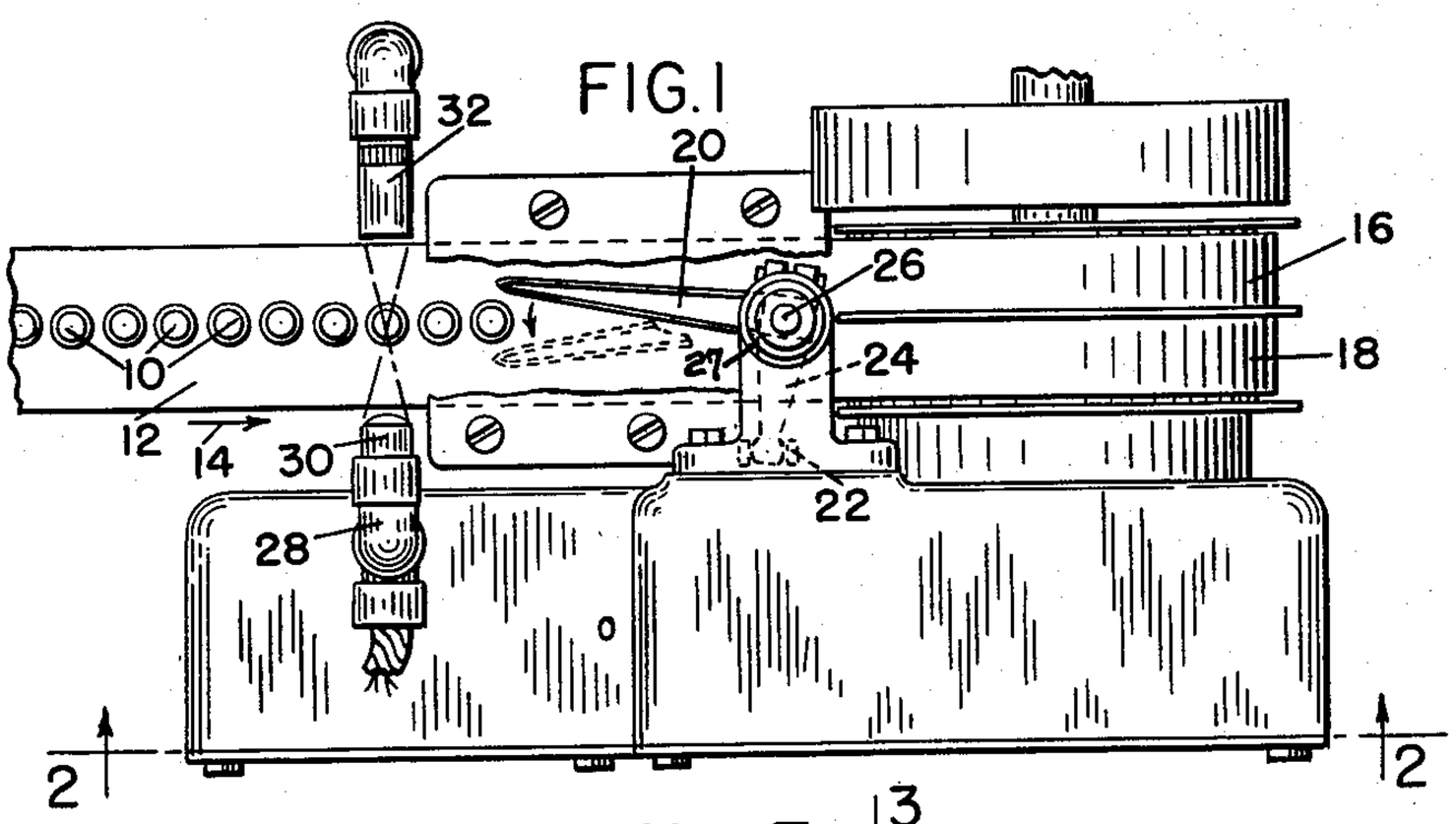

FIG. 2

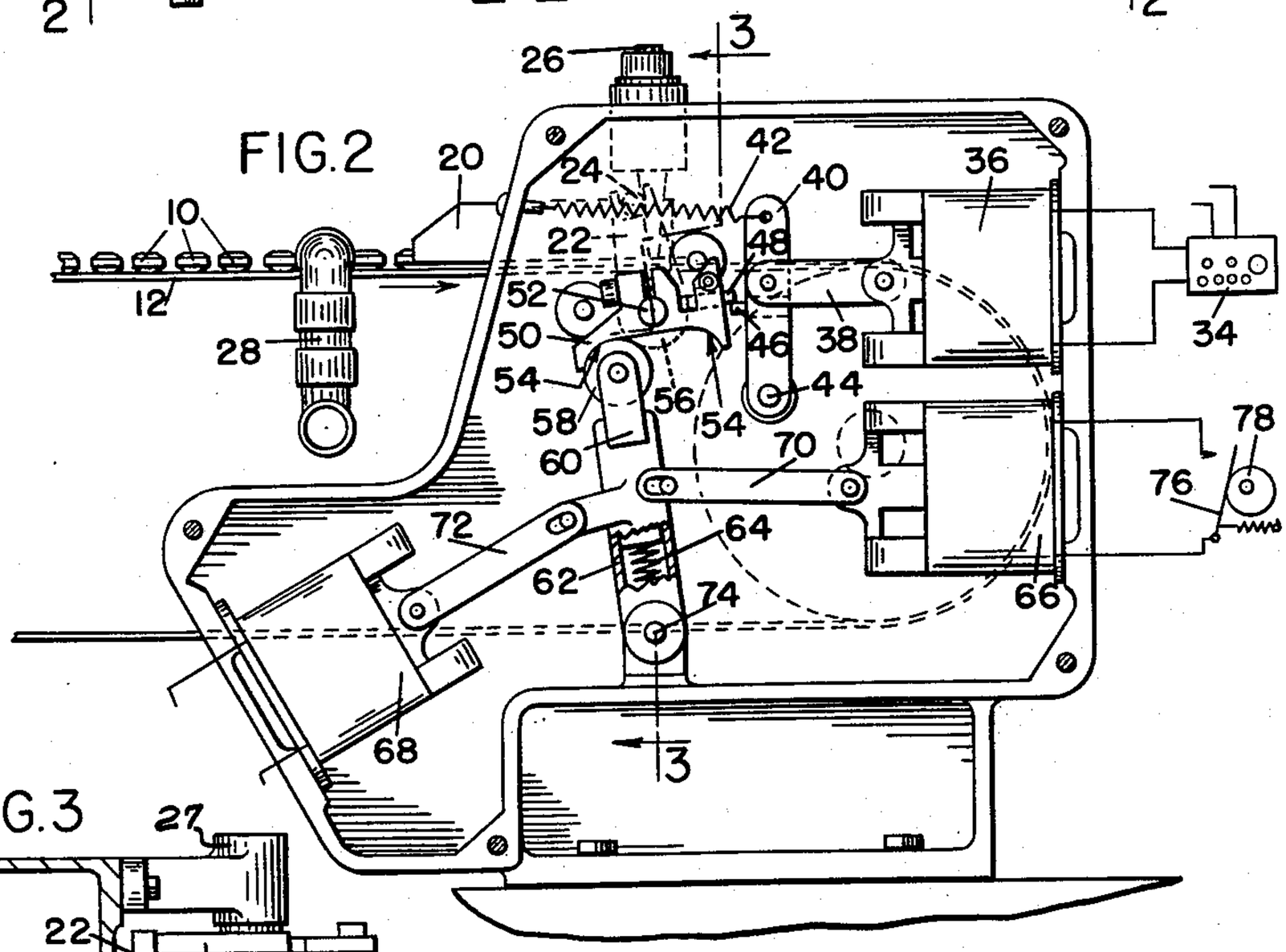

FIG. 3

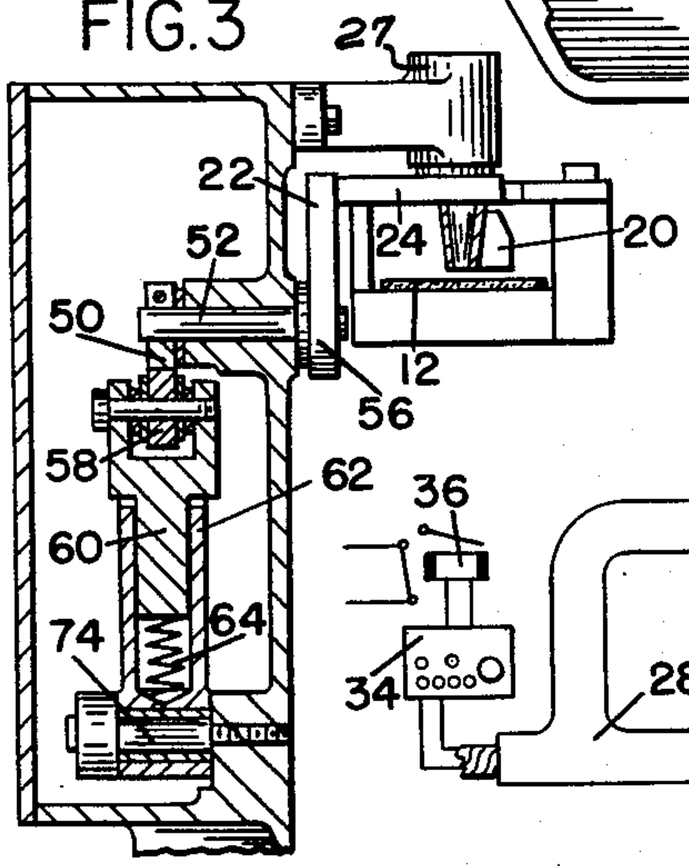

FIG. 4

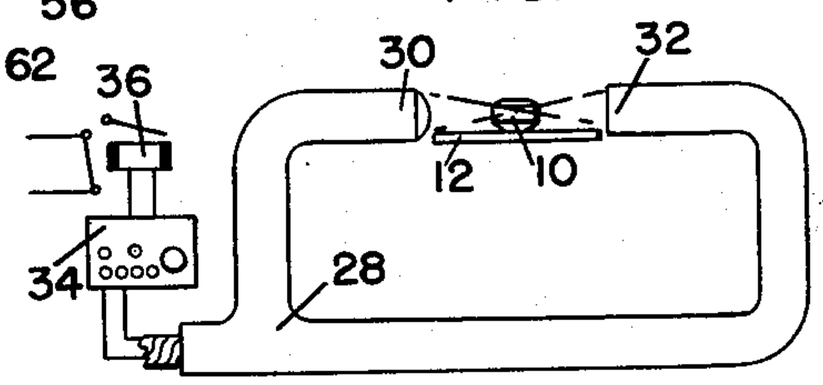

INVENTOR
EINO E. LAKSO
by Charles R. Fay,
ATTORNEY

United States Patent Office

3,008,564

Patented Nov. 14, 1961

3,008,564

FAST ACTION SHIFTING DEVICE

Eino E. Lakso, Fitchburg, Mass., assignor to The Lakso Company Incorporated, Fitchburg, Mass., a corporation of Massachusetts

Filed Dec. 31, 1958, Ser. No. 784,132

9 Claims. (Cl. 198—31)

This invention relates to a new and improved extremely fast acting shifting device which in this case is particularly adapted to a gate for dividing a high speed single line of on-coming articles to either of two or more different selected paths for the purpose of counting the articles and packaging the same. As an illustration, the invention may be used for a packaging apparatus for tablets, pills, etc., and for any small articles.

In devices of this nature, it is very difficult to obtain an automatic proper count of the articles which are to be packaged. It is clearly necessary to have at least one hundred tablets in a bottle which contains a label to the effect that there are one hundred tablets therein, but it is very difficult to present exactly one hundred tablets at each filling, and if the counting apparatus operates a few milli-seconds too slow, the error may be great enough to provide anywhere from e.g., ninety-seven to one-hundred-and-three tablets. One reason for this is that modern packaging machines operate at a very high speed.

This invention provides for an extremely accurate count by shifting a gate substantially instantaneously with the passage of the one hundredth article, or whatever the unit of measurement is, past a given point; and the gate will snap over so that the one hundred and first article et seq. will take a different selected path from that of the previous predetermined number of articles.

In carrying out the present invention, use is made of a commercial electronic counting device made by Veeder-Root Co., in combination with a photo-electric head which is interrupted by the passage of the articles, regardless of the high speed thereof, said electronic counting device accumulating a charge so that whenever the one hundredth article in any series has passed the photo-electric device, an instantaneous relatively small charge is emitted from the counter, this small charge being sufficient to actuate an electric device for causing actuation of the gate within the space of a very few milli-seconds.

The invention also contemplates the use of a trigger device which is substantially instantaneously operated by the charge of the electronic counter above referred to, said trigger device being pre-loaded so that upon being released, it is instantly transferred from one location to another, thereby mechanically operating the gate; and the provision of electrically operated and timed means for preloading the trigger means in each position so that it is ready for uniform actuation thereof upon being released by the electronic counter-operated device.

The invention further relates to arrangements and combinations of parts which will be hereinafter described and more particularly set forth in the appended claims.

Reference is to be had to the accompanying drawings, in which:

FIG. 1 is a top plan view showing the device;

FIG. 2 is an elevational view on line 2—2 of FIG. 1;

FIG. 3 is a section on line 3—3 of FIG. 2; and

FIG. 4 is a diagrammatic representation of the photo-electric counting device.

Although this invention may be applied to operate any kind of device which might be desired or convenient to the inventive concept herein, it is here shown as applied to a line of articles **10** which are traveling at a very high rate of speed on the belt **12**, moving in the direction of arrow **14** in FIG. 1, and separating the same into two

lines, each of which receives exactly one-half of the number of articles on the belt, these two lines being appropriately moved forwardly in separate alleys or troughs indicated at **16** and **18** respectively. The separating gate is illustrated generally by the reference numeral **20**, and it will be seen in FIG. 1 that it is operated by means of a yoke **22** connected to an arm **24** of what amounts to a bell crank adapted to oscillate on an upright shaft **26** in a boss **27**. As the yoke moves right and left in FIG. 1, the separating gate **20** will be moved between dotted and solid line representations thereof in order to shift the on-coming articles **10** to one side or the other to enter the appropriate trough **16** or **18**.

A photo-electric head generally indicated at **28** and perhaps best shown diagrammatically in FIG. 4, provides a beam optically directed to a very small area intermediate the two ends of the head, these being indicated at **30** and **32**, so that as each article passes the head and interrupts the light, an electronic device is actuated in the commercial electronic counter generally indicated by the reference numeral **34**.

This counter is a commercial device made by Veeder-Root Co. and is well known in the art. Its function is to discharge electrically upon the completion of a certain predetermined number of impulses from the photo-electric head, such impulses being occasioned by the passage of the articles or tablets **10** past the head. These electronic counters may be set to be actuated at an adjustable predetermined number of impulses from the head.

The electronic computer **34** is connected to operate a solenoid which is shown diagrammatically in FIG. 4 and indicated by the reference numeral **36**. This solenoid is shown mechanically in FIG. 2 and when it is actuated it pulls a link **38** to the right. This link in this case oscillates a link **40**, the latter being spring-pressed as at **42** to normally maintain a left-hand position (FIG. 2), but being momentarily withdrawn to the right upon the discharge of an electric impulse from the electronic counter after each selected unit or number of articles has passed the photoelectric head **28**. Arm **40** may be pivoted conveniently as at **44** and is provided with a small projection **46** which cooperates with a similar projection **48** on a swinging oscillatory element **50**. This element **50** is mounted to in turn oscillate a shaft **52** directly connected to the yoke **22**, the upper end of which is seen in dotted lines in FIG. 1. The oscillating element **50** is provided with a pair of horns such as at **54** and these may be concave to alternately accommodate a roller **58** on the end of a plunger **60** mounted telescopingly for instance in an oscillating sleeve **62** and projected by a compressive spring **64** constantly in a direction to engage the concave portions **54**, **54** of said horns.

It will therefore be seen with the mechanism set as in FIG. 2, and projection **46** engaging projection **48**, the element **50** is held thereby in the position shown, against the action of the spring **64** which is tending to move element **50** in a clockwise direction. Therefore, when the link **40** is withdrawn to the right, under influence of solenoid **36**, and freeing projection **48** and thereby member **50**, the spring **64** acts on plunger **60** to snap member **50** from the position shown in FIG. 2 to an opposed inclined position sufficient to turn shaft **52**, yoke **22**, etc., to move the gate from the solid line to the dotted line position in FIG. 1.

The reverse action is also accomplished in exactly the same way but in this case projection **48** is naturally now below projection **46**, and the roller **58** is in engagement with the right-hand horn or concave portion **54**, spring-loading the oscillating device **50** to be oscillated this time in a counter-clockwise direction.

In order to accomplish this, it is necessary to provide

means for oscillating the member **62** and this is done in this case by means of a pair of solenoids which are indicated at **66** and **68**, these being connected by respective links **70**, **72** to the member **62**, which is pivoted at **74**.

Solenoids **66** and **68** are operated in timed relation to the passage of the articles by any kind of automatic switch means **76** which may be desired or convenient. In this case there is shown a cam **78** which operates the switch and a like cam or the same one may be used to actuate solenoid **68**. In any event, these solenoids are electrically operated and are placed in timed relation to the passage of the units of articles. The operation of these solenoids is not particularly critical, as they may operate as stated at any time between the passage from start to finish of the particular number of articles which are to be transferred to one chute or the other at **16**, **18**. It is only necessary that the plunger **60** be in position and spring-loaded in order to snap the oscillating element **50** from one position to the other substantially instantaneously upon release of projection **48** by projection **46** no matter whether the oscillating element **50** is set to move clockwise or counter-clockwise.

The solenoid at **36** is a direct-current solenoid but those at **66** and **68** may be operated by alternating current, and it is particularly emphasized that the electric charge by the electronic counter **34** is sufficient to actuate the solenoid **36** instantaneously upon the passage of the, say fifty or one hundred articles, so that the spring **64** then operates the oscillating device **50** also substantially instantaneously.

It is pointed out that the invention above described provides a construction which is as accurate and as quick an acting device as may be made, for the reason that if a direct charge from the counter **34** is not used directly onto the D.C. solenoid **36**, then the delay in the action of such solenoid (or any A.C. solenoid) is such as to cause a variation in the time element which will cause a variation in the action of the separating gate and a consequent variation in the number of articles counter. However, the spring **64** is always loaded to the same degree and it is a single member which operates the same in both directions in order to spring load the oscillating gate actuator member **50**. Variations in the solenoids **66** and **68** are immaterial because they do not act upon the gate directly in any way at all but merely move the member **60** to a position where it becomes spring-loaded to exactly the same degree for each actuation of the device, as is necessary to accomplish an accurate actuation of the separating gate for each number of articles that it is desired to be separated.

Having thus described my invention and the advantages thereof, I do not wish to be limited to the details herein disclosed, otherwise than as set forth in the claims, but what I claim is:

1. A device of the class described comprising means for rapidly moving in line a series of articles, means counting the articles, a swinging gate-like element for directing said line of articles in predetermined numbers in a plurality of directions from said original line, and means to actuate said gate-like element comprising a movable member connected to the element, a spring-loaded plunger bearing on said movable member and adapted to move the same in a predetermined direction, said plunger being movable to engage a different portion of said member to move it in another direction, releasable means holding said member against motion in any direction, and means to operate said holding means to release the same substantially instantaneously upon the passage of a certain predetermined number of articles past said counting means.

2. A device of the class described comprising means for rapidly moving in line a series of articles, means counting the articles, a swinging gate-like element for directing said line of articles in predetermined numbers in a plurality of directions from said original line, and

means to actuate said gate-like element comprising a movable member connected to the element, a spring-loaded plunger bearing on said movable member and adapted to move the same in a predetermined direction, said plunger being movable to engage a different portion of said member to move it in another direction, releasable means holding said member against motion in any direction, and means to operate said holding means to release the same substantially instantaneously upon the passage of a certain predetermined number of articles past said counting means, and means operatively arranged between the counting means and the releasing means to actuate the latter after the predetermined number of articles has passed the counting means.

3. A device of the class described comprising means for rapidly moving in line a series of articles, means counting the articles, a swinging gate-like element for directing said line of articles in predetermined numbers in a plurality of directions from said original line, and means to actuate said gate-like element comprising a movable member connected to the element, a spring-loaded plunger bearing on said movable member and adapted to move the same in a predetermined direction, said plunger being movable to engage a different portion of said member to move it in another direction, releasable means holding said member against motion in any direction, and means to operate said holding means to release the same substantially instantaneously upon the passage of a certain predetermined number of articles past said counting means, and means operatively arranged between the counting means and the releasing means to actuate the latter after the predetermined number of articles has passed the counting means, and means for moving the plunger in timed relation to the actuation of the movable member.

4. The device of claim 3 wherein the last-named means includes solenoids connected to the plunger.

5. A device of the class described comprising means providing for a single line of articles to advance seriatim, a shiftable element directing said articles into a plurality of paths, means to shift said element accurately and quickly upon the passage past a certain point of a certain predetermined number of said articles, an oscillatory member connected to said element for moving it, an oscillatory plunger including a spring-loaded member engaged with a certain portion of said oscillatory member and constantly tending to move the same in a direction to move the shiftable element in either direction, means holding said oscillatory member against the action thereof, and means for releasing said holding means upon the passage of a predetermined number of said articles.

6. A device of the class described comprising means providing for a single line of articles to advance seriatim, a shiftable element directing said articles into a plurality of paths, means to shift said element accurately and quickly upon the passage past a certain point of a certain predetermined number of said articles, an oscillatory member connected to said element for moving it, an oscillatory plunger including a spring-loaded member engaged with a certain portion of said oscillatory member and constantly tending to move the same in a direction to actuate the shiftable element from one position to another, means holding said oscillatory member against the action thereof, means for releasing said holding means upon the passage of a predetermined number of said articles, and means shifting said spring-loaded plunger and its member to again engage said oscillatory member to tend to move the same in a reverse direction, said holding means being actuated to hold the oscillatory member against the action of said spring-loaded plunger until the releasing means is once more actuated.

7. The combination of a movable gate-like element and means to move the same, said means comprising an oscillatory member, means mounting the member on its oscillatory axis, spring-loaded means engaging the mem-

ber in positions of the member wherein it is ready to be oscillated by the spring-loaded means, and means holding said member against the action of said spring-loaded means, with means to release said holding means, said releasing means comprising a direct-current solenoid and means to actuate the same, said last-named means comprising an electronic counter deriving its action from a photo-electric head adapted to count the progress of a moving line of articles, said movable gate-like element being moved to shift a certain predetermined number of said articles into different paths.

8. In a device of the class described, means for progressing a line of aligned articles in single file past a given point, electric means counting the same, a swinging gate-like element for dividing said single line of articles into a plurality of lines, and means to operate said gate-like element comprising an oscillatory member, a pair of abutments thereon in mutually spaced relation, a plunger, a spring for said plunger moving the same toward said oscillatory member in general between said two abutments, means for locating said plunger against one or the other abutment selectively, thus in effect spring-loading the oscillatory member to tend to cause it to move in one direction or the other, a releasable stop, means on said oscillatory member and in engagement with the releasable stop holding the oscillatory member releasably in either position of extreme oscillation thereof, and means to actuate the stop to release the oscillatory member.

9. In a device of the class described, means for progressing a line of aligned articles in single file past a given point, electric means counting the same, a swinging gate-like element for dividing said single line of articles into a plurality of lines, and means to operate said gate-like element comprising an oscillatory member, a pair of abutments thereon in mutually spaced relation, a plunger, a spring for said plunger moving the same toward said oscillatory member in general between said two abutments, means for locating said plunger against one or the other abutment selectively, thus in effect spring-loading the oscillatory member to tend to cause it to move in one direction or the other, a releasable stop, means on said oscillatory member and in engagement with the releasable stop holding the oscillatory member releasably in either extreme of its oscillatory motion, and means to move said plunger from one abutment toward the other in timed relation subsequently to the stopping action of the releasable stop.

References Cited in the file of this patent

UNITED STATES PATENTS

2,270,951	Jeffrey	Jan. 27, 1942
2,679,317	Roop	May 15, 1954