June 13, 1961

J. R. PINKHAM

2,988,198

CIGARETTE TURN AROUND DEVICE

Filed May 8, 1958

2 Sheets-Sheet 1

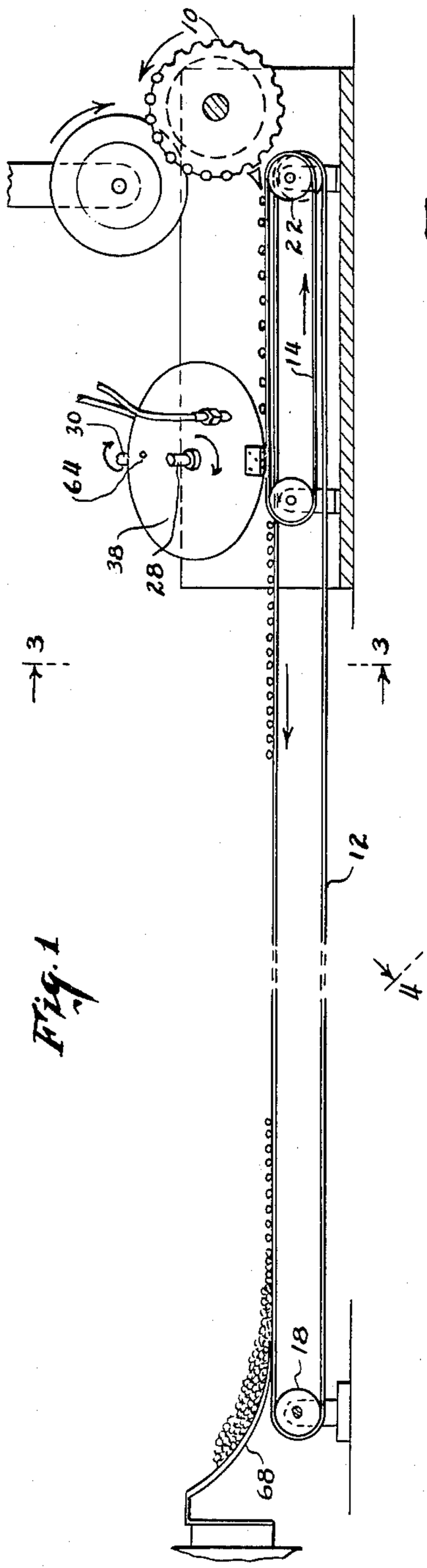

Fig. 1

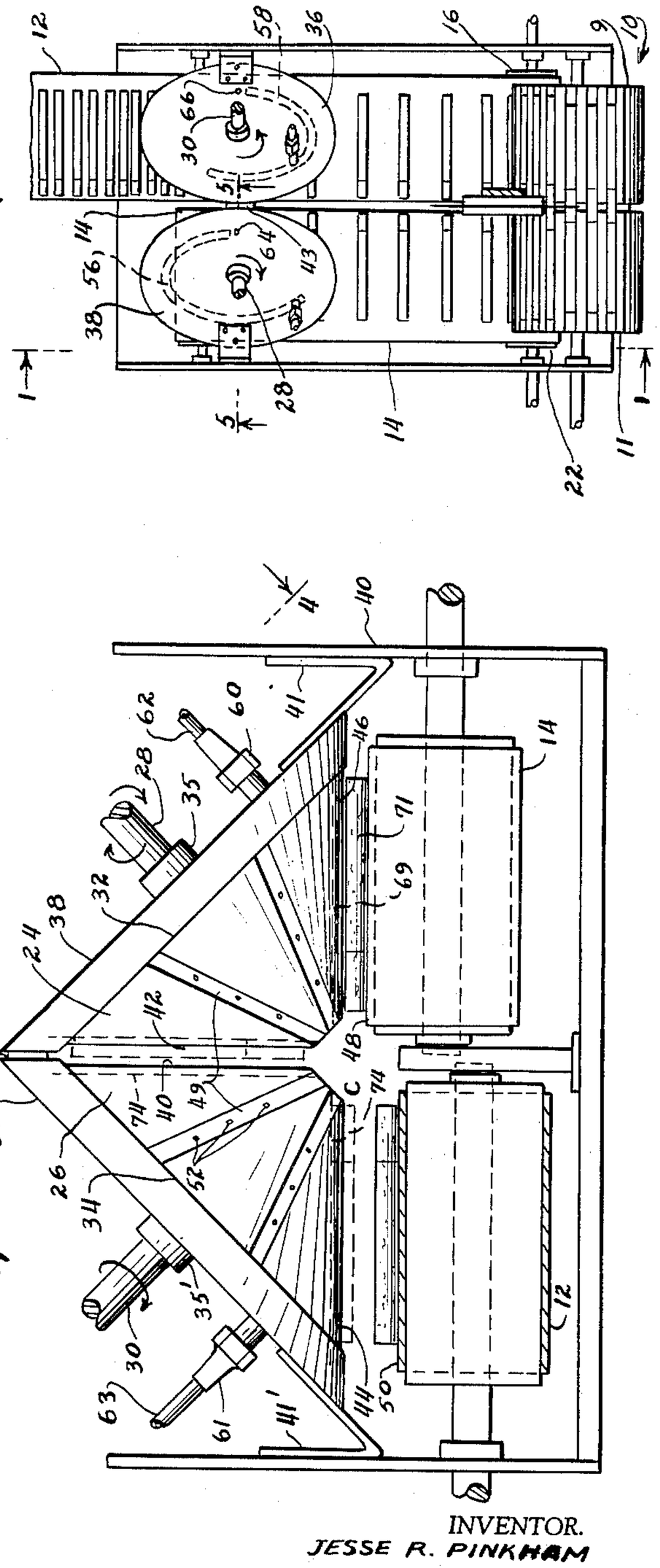

Fig. 2

Fig. 3

INVENTOR.
JESSE R. PINKHAM

BY

ATTORNEY

June 13, 1961 J. R. PINKHAM 2,988,198

CIGARETTE TURN AROUND DEVICE

Filed May 8, 1958 2 Sheets-Sheet 2

Fig. 4

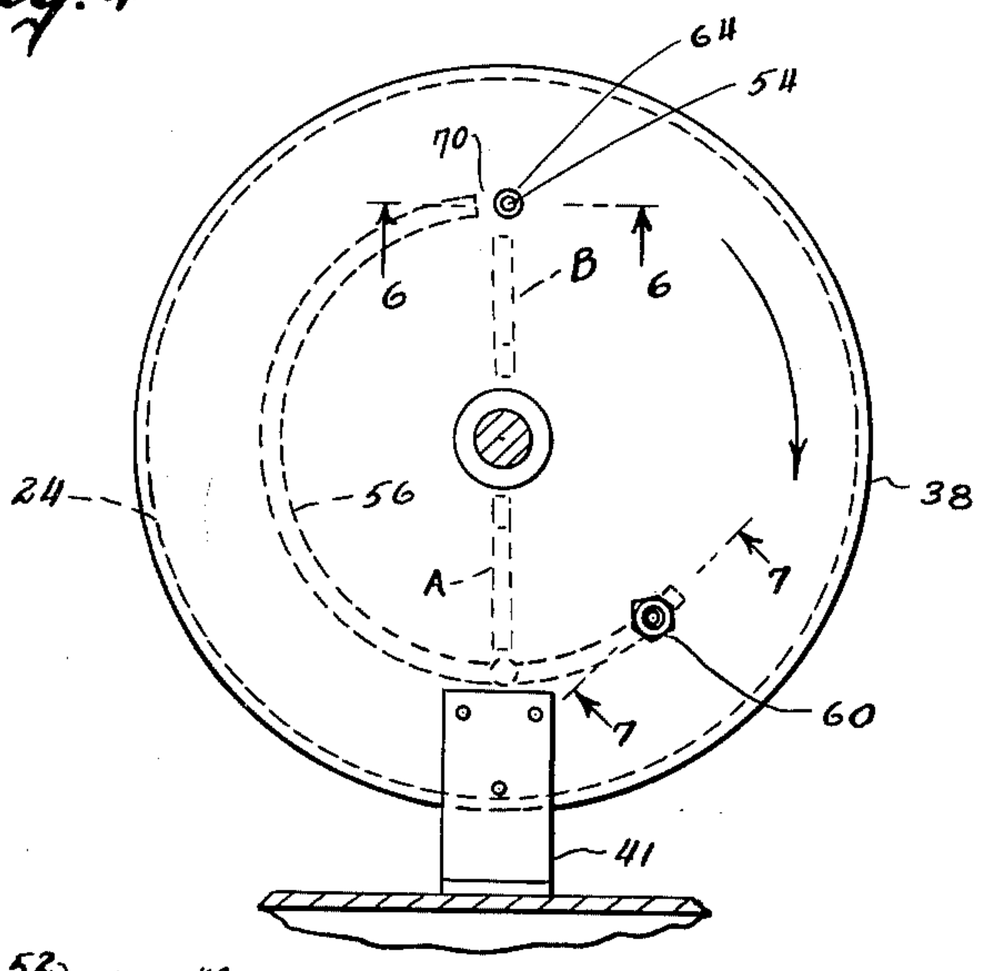

Fig. 5

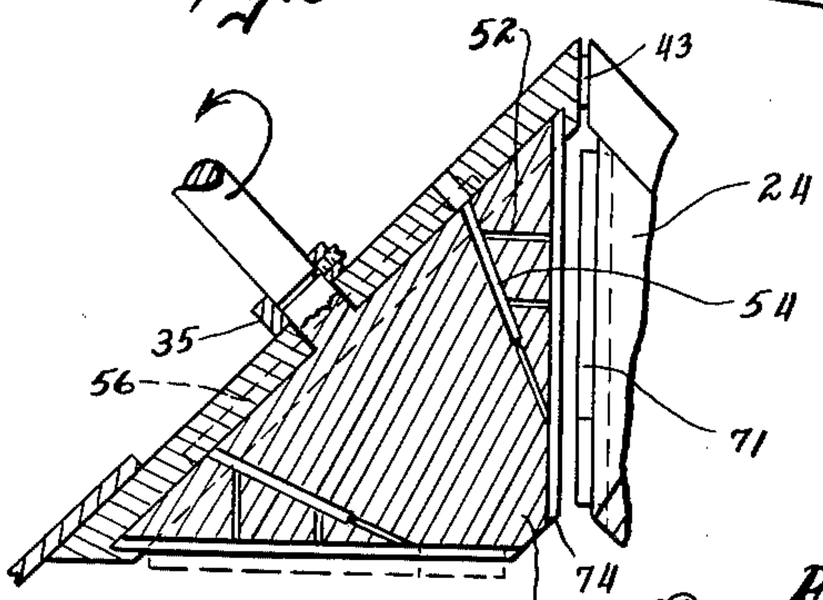

Fig. 6

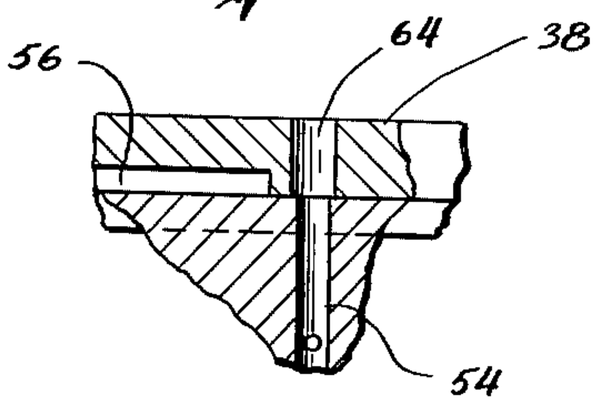

Fig. 7

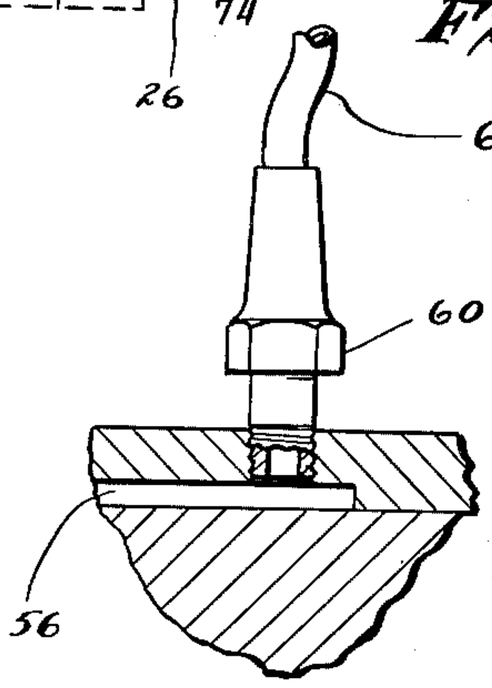

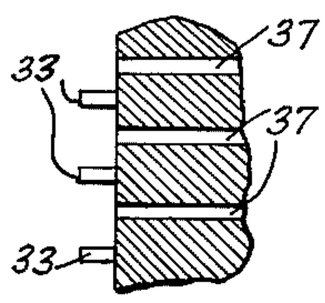

Fig. 8

INVENTOR.
JESSE R. PINKHAM

BY Thomas J. Eastlake

ATTORNEY

United States Patent Office

2,988,198

Patented June 13, 1961

2,988,198

CIGARETTE TURN AROUND DEVICE

Jesse R. Pinkham, Raleigh, N.C., assignor to American Machine & Foundry Company, a corporation of New Jersey

Filed May 8, 1958, Ser. No. 733,961
22 Claims. (Cl. 198—32)

This invention relates to cigarette making, and more particularly to a vacuum suction cone turn-around device for turning tipped cigarettes, received by a collector end-for-end in a cigarette machine, to thereby cause the tip ends of all cigarettes to face in the same direction.

In the process of manufacturing tipped cigarettes (i.e. mouthpiece, cork tipped, or filter tipped cigarettes) the tipped cigarette lengths are discharged in two rows onto collecting belts with the tip ends of the cigarettes in each row facing in opposite directions. The cigarettes in one row then have to be turned so that the tip ends of these cigarettes will face in the same direction as the tip ends of the cigarettes of the other row, before the tipped cigarettes are transferred in suitable containers to a cigarette packaging machine.

Various mechanical devices have been devised for turning cigarettes end-for-end. Some of these devices have been found expensive to construct while others handle the cigarettes so roughly that the cigarettes have undesirable indentations formed thereon by the turning device.

It is an object of this invention to provide a simple device which will turn the tipped cigarettes in one row end-for-end, so that the tipped cigarettes will face in an opposite direction after being turned.

Another object of this invention is to provide a cigarette turn-around device which will have no impacting elements engaging the body of the cigarette which will have deleterious effect on the cigarette.

A further object of this invention is to provide a pair of truncated cones which embody means for picking up and dropping cigarettes and cooperate to receive and turn these cigarettes end-for-end before discharging them onto a collecting belt.

Still another object of the invention is to provide such a turn-around device which is reliable in operation, simple in construction and inexpensive to manufacture.

Other objects, features and advantages of the invention will be apparent from the following description when taken in connection with the accompanying drawings forming a part of this specification and illustrating a preferred embodiment of the invention.

In the drawings, wherein like numerals refer to like parts throughout the same:

FIG. 1 is a side elevation of the turn-around device;

FIG. 2 is a plan view of the device of FIG. 1;

FIG. 3 is a view of the device taken on line 3—3 of FIG. 1;

FIG. 4 is a plan view of one of the cones taken on line 4—4 of FIG. 3;

FIG. 5 is a section of the other cone taken on line 5—5 of FIG. 2;

FIG. 6 is a fragmentary section taken on lines 6—6 of FIG. 4;

FIG. 7 is a fragmentary section taken on line 7—7 of FIG. 4; and

FIGURE 8 is a sectional view showing another embodiment of the present invention.

The invention is particularly well suited for use with a cigarette machine making tipped cigarettes (i.e. cork tipped, filter tipped, or mouthpieces cigarettes) wherein the cut, tipped cigarette lengths are discharged laterally in the manner shown in co-pending application Serial No. 509,293, filed by George Dearsley on May 18, 1955,

and in United States Reissue Patent 19,375, granted November 20, 1934, to W. B. Bronander.

In the apparatus employed to illustrate the invention, I have shown how the cigarettes are discharged in pairs from a fluted drum 10, such as that shown in co-pending application Serial No. 509,293 referred to above, wherein the tipped ends of the cigarettes in each row face in opposite directions. This severing operation of dividing a double length cigarette into two equal lengths is accomplished by a blade which is fully described in co-pending application, Serial No. 509,293.

As shown in FIGS. 1–3, the cigarettes severed by the circular blade are delivered from side 9 of drum 10 onto a long collecting belt 12, while cigarettes from the drum side 11 are delivered onto a short high-speed pick-up belt 14, so that their tipped ends face in opposite directions.

Belt 12 travels in a horizontal plane over pulleys 16 and 18, while belt 14 travels in a horizontal plane above that of belt 12 over pulleys 20 and 22. Since the manner of mounting pulleys on shafts is well known in the art, no reference has been made to their respective shafts. The pulleys 16 and 22 are driven by suitable means (not shown) from a suitable drive.

Arranged adjacent one another, above belts 12 and 14, are a truncated pick-up cone 24 and a drop cone 26, rotatable by means of shafts 28 and 30, centrally and perpendicularly secured to cone bases 32 and 34. Both shafts are driven at equal speeds and in time relationship with feed belt 14 by suitable means (not shown), and are journaled in shoes 36 and 38.

Retaining rings 35 and 35′ on shafts 28 and 30 prevent their axial displacement. The shoes are each disposed at an angle of 45° to vertical frame 40, to which they are secured by means of brackets 41 and 41′. A suitable spacer 43 assists in providing rigidity for the shoes.

The curved surfaces of each of the cones are tapered at 45° to their respective bases. Due to these taper angles, adjacent cone surfaces 40 and 42, which are spaced approximately the thickness of one of the cigarettes discharged by drum 10, are disposed in a perpendicular plane, while tapered surfaces 44 and 46 are in a horizontal plane and parallel to belts 12 and 14, respectively. The upper surface 48 of belt 14 is spaced from said cone surface 46 the thickness of one of these cigarettes, while upper surface 50 of collecting belt 12 at the drop end of the device is spaced from cone surface 44 the thickness of at least two of such cigarettes.

The curved surfaces of cones 24 and 26 may be provided with a series of radially disposed converging semicircular pockets or flutes 49 whose diameters correspond to those of the cigarettes discharged by drum 10. It will be understood that while flutes have been shown in the drawings, the apparatus could work equally as well with suction holes alone and would perform the same function as the plates when cigarettes are conveyed by the cones 24 and 26. In such alternate construction, as shown in FIGURE 8, short pins or pegs 33 disposed adjacent the suction holes 37 could serve as supporting means for maintaining the cigarettes in alignment. Obviously this requires positioning the cones at a greater distance from each other and from the belts to avoid crushing cigarettes with the pins. As shown in FIGS. 3–5, the flutes are adapted to communicate during the rotation of the cones, by means of bores 52 and 54 with semicircular channels 56 and 58 in cone bases 32 and 34 respectively, as shown by dotted lines in FIGS. 2, 4, and 5. Cone bases 32 and 34 and the faces of their respective shoes are in close proximity with one another and may be lapped so as to effect a substantially air-tight seal during the rotation of the cones.

As shown in FIGS. 3, 4, and 7, channels 56 and 58 in shoes 36 and 38 are connected to a vacuum pump (not

shown), by means of couplings **60**, **61** and flexible hoses **62** and **63**.

There are additionally provided in the shoes **36** and **38** air inlet or vacuum release holes **64** and **66**, as exemplified by a detail of shoe **38** in FIG. 6, which serve to break the vacuum suction in the pockets of the cones when a bore, such as **54**, is brought in alignment with one of these holes.

With the device in operation, tipped cigarettes discharged by side **9** of drum **10** on collecting belt **12** are delivered to stop plate **68**, where they pile up and are removed manually or by mechanical means. The tipped ends of the cigarettes discharged by side **11** of the drum on pick-up belt **14**, face in a direction opposite to the tipped ends of those on collecting belt **12**. Due to the previously noted timing of the speeds of the cones and belt **14**, each time a flute of cone **24** reaches its lowermost position adjacent that belt, a cigarette **71** is brought in alignment with that flute.

FIG. 3 clearly illustrates a cigarette in such position on belt **14**, with one of the flutes, shown in dotted lines, directly above it. In this posiiton (indicated at A by dotted lines in FIG. 4) flute **69** is in communication with the vacuum suction device through cone bores of the type shown in FIG. 5, and channel **56** in shoe **38**.

The cigarette is therefore drawn into the flute by vacuum suction and is securely held therein as cone **24** continues its rotation in the direction shown in the drawings, until the flute reaches the vertical position nearest to cone **26**. As shown by dotted lines at B in FIG. 4, the bore connecting flute **69** with channel **56** in shoe **38** has passed channel end **70** and is aligned with air inlet **64** as further shown in detail in FIG. 6. Air entering the flute through air inlet **64**, bore **54** and the other connecting bores, releases the cigarette from flute **68**.

FIG. 5 clearly shows the position of cigarette **71** in the flute of cone **24**, at that instant.

The rotation of cones **24** and **26** is timed in such a manner that a flute **74** in the latter becomes aligned with the cigarette at the exact moment when the latter is released by flute **69** of cone **24**. As may be seen further in FIG. 5, where drop cone **26** is shown in section, flute **74** is subjected to vacuum suction through bores **52** and **54** in communication with channel **56**, which is shown in dotted lines. Consequently, the cigarette is pulled in by this suction into flute **74** and is held securely therein while cone **26** continues its rotation in the direction shown by the arrow.

Upon reaching the position indicated at C in FIG. 3, flute **74** is no longer in communication with vacuum suction channel **58**, but is aligned with air inlet or vacuum release opening **66**. Consequently, the cigarette is no longer held by vacuum suction and drops on collecting belt **12**, by which it is moved along with the other cigarettes to curved box **68**. Due to the angular displacement during rotation, by flutes **69** and **74** of cones **24** and **26**, respectively, of tipped cigarette **71**, the latter is turned around 180° by the time it reaches collecting belt **12**, so that its tip end faces in the same direction as the tipped ends of the cigarettes directly discharged by side **9** of the drum on collecting belt **12**. Other cigarettes discharged upon pick-up belt **14** are pulled into the consecutive flutes or pockets of cone **24** as the latter continues its rotation, are picked up by the flutes of cone **26**, are turned around 180°, and discharged, upon collecting belt **12**, in a similar manner. As previously noted, sufficient clearance is provided between cone **26** and collecting belt **12** to allow the passage of cigarettes discharged by end **9** of the drum, so that these cigarettes do not interfere with the operation of cone **26**.

Instead of employing the short pick-up belt **14**, as illustrated in the drawing, there may be employed at the pick-up end a pair of transfer drums provided with fluted recesses or pockets about their circumferences. One of such drums may receive the cigarettes from side **11** of the cutting drum and transfer these to the other, whose periphery is adjacent the horizontally disposed surface of pick-up cone **24**.

Furthermore, collecting belt **12** may be doubled in width, so that one-half thereof will receive cigarettes discharged directly from the cutting drum, while its other half may be employed to catch the turned around cigarettes so that they will move alongside one another.

In such construction, the cone bases may be widened, so that the operative slanted surfaces of both the pick-up and drop cones will be properly spaced to clear the cigarettes deposited directly on the collecting belt by the drum **10**.

It will be understood that this invention deals with turning cigarettes end-for-end, and it makes no difference to the functioning of any apparatus whether the tip ends face each other in adjoining rows or whether the tip ends face outwardly in each row. Likewise, it makes no difference whether the outside or inside rows are turned, and similarly the turned cigarettes can be accumulated in the inside or outside rows or in one or more rows as desired.

The invention hereinabove described may be varied in construction within the scope of the claims, for the particular device selected to illustrate the invention is but one of many possible embodiments of the same. The invention, therefore, is not to be restricted to the precise details of the structure shown and described.

What is claimed is:

1. A device for turning cigarettes end-for-end, comprising a source of supply of tipped cigarettes delivered in two adjacent rows wherein the cigarettes in one row have their tipped ends facing in a direction opposite to the direction the cigarettes in the adjacent row have their tipped ends facing, a pair of truncated cones coacting to receive cigarettes from one of said rows, to turn the cigarettes 180 degrees and deliver them to the other of said rows, so as to cause the tipped ends of the cigarettes thus delivered to face in the direction in which the cigarettes in said other row are facing.

2. A device for turning cigarettes end-for-end, comprising a source of supply adapted to deliver tipped cigarettes in two adjacent rows, a first row and a second row, with the cigarettes in the first row having their tipped ends facing in a direction opposite to the direction in which the tipped ends of the second row are facing: first means for receiving and delivering said first row of cigarettes to a collecting station; second means for receiving the second row of cigarettes, and truncated cone turn-around means adapted to pick up the cigarettes in said second row from said second receiving means and to turn said cigarettes end-for-end, so as to cause their tip ends to face in the same direction in which the tipped cigarette ends of said first row are facing, said cone means being further adapted to deliver the cigarettes thus turned around to said first cigarette-receiving and delivery means.

3. In a cigarette-making machine, means for discharging tipped cigarettes in a pair of adjacent spaced rows, a first row and a second row, with the cigarettes in the first row having their tipped ends facing in a direction opposite to the direction in which the tipped ends of the second row are facing; a collecting belt for receiving and delivering said first row of cigarettes to a collecting station; means for receiving the second row of cigarettes, and means for turning the cigarettes in said second row end-for-end so as to cause their tip ends to face in the same direction in which the tipped cigarette ends of said first row are facing, said turn-around means comprising a first rotatable truncated cone member provided with means for picking up and discharging the cigarettes in said second row, a second rotatable truncated cone member, angularly disposed adjacent said first cone member and provided with means for receiving the cigarettes discharged by said first cone member and for discharging said cigarettes upon said collecting belt, both said cones being rotatable in

timed relationship to one another and to said second means for receiving the second row of cigarettes.

4. In a cigarette-making machine, means for discharging tipped cigarettes in a pair of adjacent spaced rows, the cigarettes in one row having their tipped ends facing in a direction opposite to the direction in which the tipped ends of the second row are facing; a first conveyor for receiving and delivering said one row of cigarettes to a collecting station, a second conveyor for receiving said other row of cigarettes; a pair of adjacent spaced angularly disposed rotatable truncated cones, a first cone disposed above said first conveyor, and a second cone disposed above said second conveyor, said cones being provided with a plurality of radially disposed semicircular cigarette receiving pockets extending from the cone bases to the cone apices; valve means adapted to connect certain of these pockets with a vacuum pump to effect suction by which said pockets are charged with cigarettes from the second conveyor, said valve means being further adapted to release the suction on the cigarettes upon their being turned around by said cones 180 degrees, onto said first conveyor, whereby said cigarettes are delivered thereon with their tipped ends facing in the direction in which the cigarettes in said one row are facing.

5. In a cigarette-making machine, means for discharging tipped cigarettes in a pair of adjacent spaced rows, the cigarettes in one row having their tipped ends facing in a direction opposite to the direction in which the tipped ends of the second row are facing; a first conveyor for receiving and delivering said one row of cigarettes to a collection station, a second conveyor for receiving said other row of cigarettes; a pair of adjacent spaced angularly disposed rotatable truncated cones, a first cone disposed above said first conveyor, said cones having a plurality of radially disposed rows of bores connecting the tapered face portion of the cones with their bases, and valve means adapted for connecting the bores with a vacuum pump to effect suction, by which said cones are charged during rotation with cigarettes from the second conveyor.

6. In a cigarette-making machine, means for discharging tipped cigarettes in a pair of adjacent spaced rows, the cigarettes in one row having their tipped ends facing in a direction opposite to the direction in which the tipped ends of the second row are facing; a first conveyor for receiving and delivering said one row of cigarettes to a collection station, a second conveyor for receiving said other row of cigarettes; a pair of adjacent spaced angularly disposed rotatable truncated cones, a first cone disposed above said first conveyor, and a second cone disposed above said second conveyor, said cones having a plurality of radially disposed rows of bores connecting the tapered face portion of the cones with their bases, valve means adapted for connecting the bores with a vacuum pump to effect suction, by which said cones are charged during rotation with cigarettes from the second conveyor, and means secured exteriorly to said cones adjacent each of said rows of bores for maintaining in alignment the cigarettes held by vacuum suction of said cones.

7. In a cigarette-making machine, means for discharging tipped cigarettes in a pair of adjacent spaced rows, the cigarettes in one row having their tipped ends facing in a direction opposite to the direction in which the tipped ends of the second row are facing; a first conveyor for receiving and delivering said one row of cigarettes to a collecting station, a second conveyor for receiving said other row of cigarettes; a pair of adjacent spaced angularly disposed rotatable truncated cones, a first cone disposed above said first conveyor, and a second cone disposed above said second conveyor, said cones having a plurality of radially disposed rows of bores connecting the tapered face portion of the cones with their bases, valve means adapted for connecting the bores with a vacuum pump to effect suction, by which said cones are charged during rotation with cigarettes from the second conveyor, and guide pins secured to said cones adjacent each of said rows of bores, to maintain in alignment the cigarettes charged by vacuum suction on said cones.

8. In a cigarette-making machine, means for discharging tipped cigarettes in a pair of adjacent spaced rows, so that the tipped ends of the cigarettes in each adjacent row face in opposite directions; a pair of adjacent rotatable truncated cones angularly disposed above said rows, and provided with suction means adapted to pick up the cigarettes in one row and deliver these to the other row after being turned around by said cones end-for-end, shaft means for rotating said cones in timed relationship with one another, and means for supporting said shaft means.

9. In a cigarette-making machine, means for discharging tipped cigarettes in a pair of adjacent spaced rows, the cigarettes in one row having their tipped ends facing in a direction opposite to the direction in which the tipped ends of the second row are facing; a first conveyor for receiving and delivering said one row of cigarettes to a collecting station, a second conveyor for receiving said other row of cigarettes; a pair of adjacent spaced angularly disposed rotatable truncated cones, a first cone disposed above said first conveyor, and a second cone disposed above said second conveyor, valve means comprising a pair of fixedly mounted shoes having cone base contacting faces, shaft means secured centrally and perpendicularly to said bases and journalled in said shoes and rotatable in timed relationship with one another, said shoes having semicircular recesses in said faces and air inlet openings spaced from said recesses, said means connecting said recesses to a vacuum pump, said cones being provided with bores therein for alternatively communicating the cone pockets with said recesses and said air inlet openings at predetermined time intervals, and means for mounting said shoes in said cigarette-making machine.

10. In a cigarette-making machine, means for discharging tipped cigarettes in a pair of adjacent spaced rows, the cigarettes in one row having their tipped ends facing in a direction opposite to the direction in which the tipped ends of the second row are facing; a first conveyor for receiving and delivering said one row of cigarettes to a collecting station, a second conveyor for receiving said other row of cigarettes, both said conveyors being movable in a horizontal plane; first and second rotatable truncated cones angularly disposed above and adjacent said first and second conveyors, respectively, one tapered face of each of said cones being rotatable parallel to said horizontal plane, and its other opposite tapered face in a vertical plane, said cones having vacuum suction means for receiving the cigarettes from said second conveyor, and for holding these by suction on said cones while being turned around end-for-end by the latter, said vacuum suction means being adapted to release and deposit the cigarettes onto said first conveyor at a predetermined time, whereby the tipped ends of the turned around cigarettes from said second row are made to face in the direction of tipped ends of the cigarettes on said first row.

11. In a cigarette-making machine, means for discharging tipped cigarettes in a pair of adjacent spaced rows, with the tipped ends of the cigarettes facing in opposite direction, a first conveyor belt for receiving and delivering one of said rows to a collecting station; a second conveyor belt for receiving said other row of cigarettes, both said belts being movable in a horizontal plane; first and second truncated cones arranged for rotation above and adjacent said first and second belts respectively, and having tapered faces parallel to said horizontal plane and opposed spaced faces tapering at right angles to said horizontal plane, said cones having vacuum suction means for receiving the cigarettes from said second belt and for holding these by suction on said cones while being turned around end-for-end by the latter, said vacuum suction means being adapted to release and deposit the cigarettes onto said first belt at a predetermined time, whereby the tipped ends of the turned around cigarettes from said second row are made

to face in the direction of the tipped ends of the cigarettes on said first row.

12. In a cigarette-making machine, means for discharging tipped cigarettes in a pair of adjacent spaced rows, with the tipped ends of the cigarettes facing in opposite directions, a first endless collecting belt for receiving and delivering one of said rows to a collecting station; a second endless collecting belt for receiving said other row of cigarettes, both said belts being movable in a horizontal plane; first and and second truncated cones arranged for rotation above and adjacent said first and second belts respectively, said second cone having vacuum suction means adapted for receiving the cigarettes from said second belt for delivery to said first cone, said first cone having vacuum suction means for receiving the cigarettes delivered to it by the second cone and for discharging these onto said first collecting belt, the angles of rotation of said cones being arranged to turn said cigarettes received from said second row end-for-end 180 degrees, whereby the tipped ends of the cigarettes thus turned around are made to face in the direction of the cigarettes on said first row.

13. In a cigarette-making machine, means for discharging tipped cigarettes in a pair of adjacent spaced rows, with the tipped ends of the cigarettes facing in opposite directions; a first endless collecting belt for receiving and delivering one of said rows to a collecting station; a second endless collecting belt for receiving the other row of cigarettes, both said belts being movable in a horizontal plane; a first truncated cone spaced with one horizontal tapered face the thickness of at least two cigarettes from said first collecting belt, a second truncated cone spaced with one horizontal tapered face at least the thickness of one cigarette from said second collecting belt, the other opposed tapered faces of said cones being disposed in a vertical plane and spaced the thickness of at least one cigarette from one another, said second cone being provided with first vacuum suction means adapted for receiving the cigarettes from said second belt for delivery to said first cone, said first cone having second vacuum suction means for receiving the cigarettes delivered to it by the second cone and for discharging these onto said first collecting belt, the angles of rotation of said cones being arranged to turn said cigarettes received from said second row end-for-end, both said vacuum suction means being operable in timed relationship, whereby the tipped ends of the cigarettes thus turned around are made to face in the direction of the cigarettes on said first row.

14. In a cigarette-making machine, means for discharging tipped cigarettes in a pair of adjacent spaced rows with the tipped ends of the cigarettes facing in opposite directions, comprising a first collecting belt for receiving and delivering one of said rows to a collecting station; a second collecting belt for receiving said other row of cigarettes; pairs of spaced pulleys for mounting both said belts; first and second truncated cones arranged for rotation above and adjacent said first and second belts respectively, and provided with vacuum suction means adapted for receiving the cigarettes from said second belt for delivery to said first belt, both said cones and said second belt being rotatable in timed relationship with one another and with said second belt, the axes of rotation of said cones being arranged with respect to said belts in such a manner that the cigarettes received by said vacuum suction means are turned around end-for-end and discharged onto said first collecting belt, whereby the tipped ends of the cigarettes thus turned around are made to face in the direction of the cigarettes on said first row.

15. A device for turning cigarettes end-for-end, comprising a source of supply of tipped cigarettes delivered in two adjacent rows wherein the tipped ends of the cigarettes in the first row face in a direction opposite to the tipped ends of the cigarettes in the second row, comprising an endless collecting belt for receiving and delivering one of said rows to a collecting station; a drum adapted to receive the other row of cigarettes; a first truncated cone rotatably disposed adjacent said endless belt and a second truncated cone adjacent said first cone, said cones being provided with suction means enabling them to receive the cigarettes from said drum, and to turn said cigarettes around 180 degrees, and means for releasing said suction and said cigarettes onto said belt after the cigarettes have thus been turned around, whereby the tipped ends of these cigarettes face in the direction in which the tipped ends of the cigarettes in said first row are facing.

16. In a cigarette-making machine, means for discharging tipped cigarettes in a pair of spaced rows, a collecting belt adapted to receive one of said rows on one end thereof, said collecting belt being of a width sufficient to receive an additional row of cigarettes adjacent said first row; means for receiving the second of said rows; a pair of rotatable truncated cones coacting to receive the cigarettes in said second row and to turn these 180 degrees for depositing them onto said collecting belt, adjacent said one row, whereby the tipped ends of the cigarettes thus delivered are caused to face in the direction in which the cigarettes in said other row are facing, said collecting belt being further adapted to move the cigarettes to a collecting station.

17. A cigarette turning device comprising non-planar parallel sets of belts and means for taking cigarettes from a belt on one plane and delivering said cigarettes, in a reversed position, to a belt on a different plane, said means comprising rotating cones coacting to receive cigarettes on one belt and turning said cigarettes through an arc of substantially 180 degrees before dropping them on the other belt in said reversed position.

18. A cigarette turning device comprising means for conveying cigarettes arranged in rows with the ends of said cigarettes in one row facing in the opposite direction from the ends of the cigarettes in an adjacent row lying on a different plane from said other row, and cooperating rotating cones above and in alignment with the path of travel of said means, said cones having suction means adapted to temporarily secure thereto cigarettes picked up from one of said rows, whereby said cigarettes are delivered to the adjacent row in a reversed position coinciding with the direction in which said cigarettes in said adjacent row are facing.

19. A cigarette turning device comprising two sets of parallel collector belts to which cigarettes are delivered with tips facing in opposite directions, one of said belts being on a higher plane than the other, cooperating oppositely rotating cones above the path of travel of said belts, said cones having suction means for grasping cigarettes from said higher belt and conveying said cigarettes through an arch of substantially 180 degrees thus reversing their position prior to depositing them on said lower belt facing in the same direction as the cigarettes already on said lower belt.

20. In a cigarette-making machine, means for discharging tipped cigarettes arranged on a pair of adjacent spaced non-planar conveyors, the tipped ends on the first conveyor, facing in the opposite direction from the tipped ends of the cigarettes on the second conveyor, adjacent spaced angularly disposed cones above and in alignment with the path of travel of said conveyors for taking cigarettes from the first of said conveyors and delivering them to said second conveyor in a reversed position corresponding to that of cigarettes already thereon.

21. A cigarette turning device comprising a source of supply of tipped cigarettes delivered in two adjacent rows with the tipped ends of cigarettes in the first row facing in the opposite direction from the ends of cigarettes in the second row, cooperating rotating pick up and drop cones positioned at a predetermined distance above said rows to clear said cigarettes, said pick up cone having

suction means to receive cigarettes from one row, said drop cone having also means for releasing said suction and thereby dropping said cigarettes onto said other row after said cigarettes have been turned around about 180 degrees by said cones, whereby the tipped ends of these cigarettes face in the direction in which the tipped ends of the cigarettes in said first row are facing.

22. In a cigarette-making machine, means for discharging tipped cigarettes in adjacent spaced rows so that the tipped ends of the cigarettes in each adjacent row face in opposite directions, complementary, rotating cones located above said rows and provided with suction means adapted to pick up cigarettes in one row and holding

said cigarettes while turning them through an arc of substantially 180 degrees, and delivering the thus reversed cigarettes to the other row facing the same direction as the cigarettes already thereon.

References Cited in the file of this patent

UNITED STATES PATENTS

2,509,725	Dalton	May 30, 1950
2,509,752	Wheeley	May 30, 1950

FOREIGN PATENTS

425,989	Great Britain	Mar. 21, 1935