June 21, 1960 R. ETTLINGER, JR 2,941,663

CUP TRAY AND STACKER

Filed July 9, 1958 2 Sheets-Sheet 1

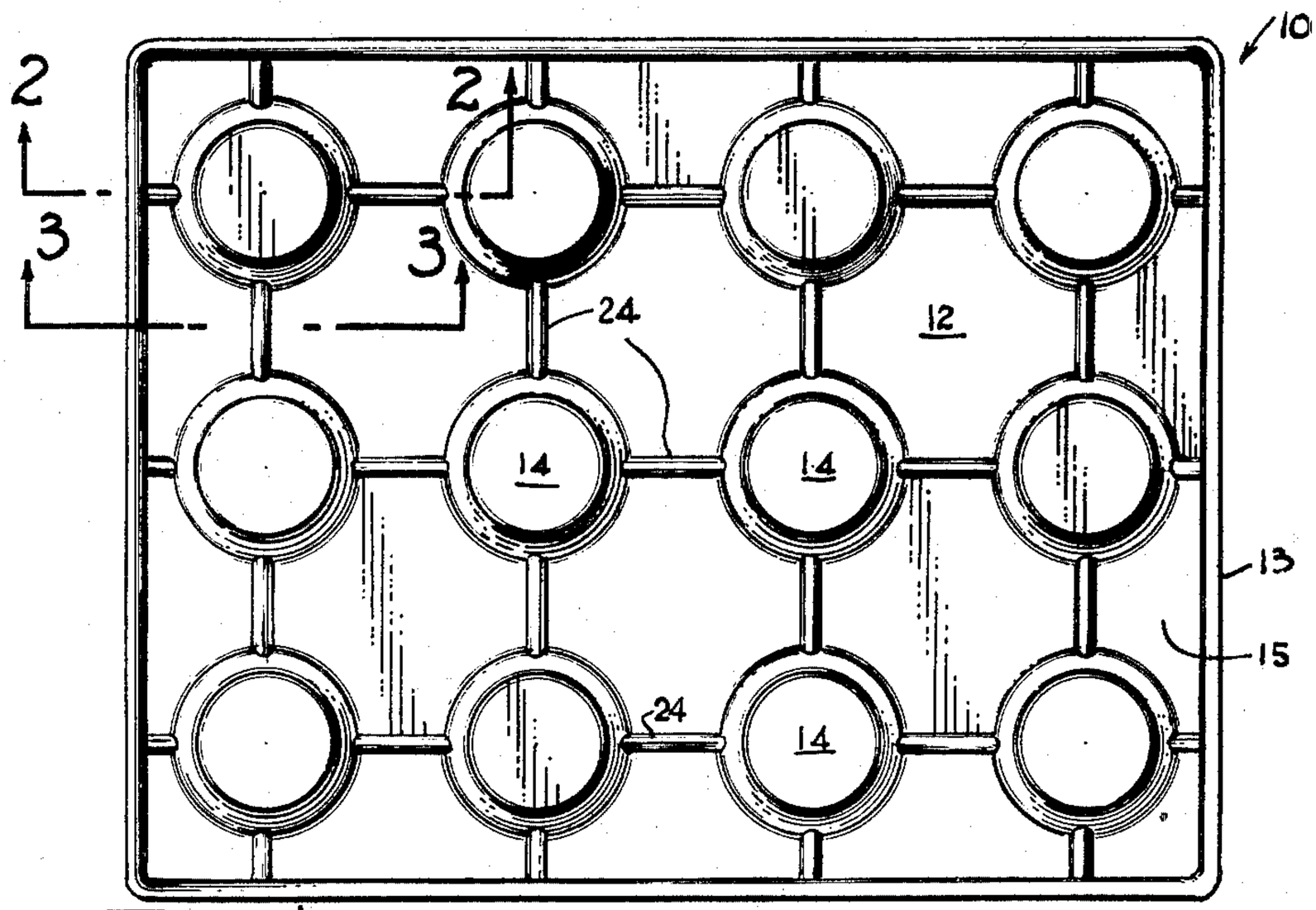

Fig. 1

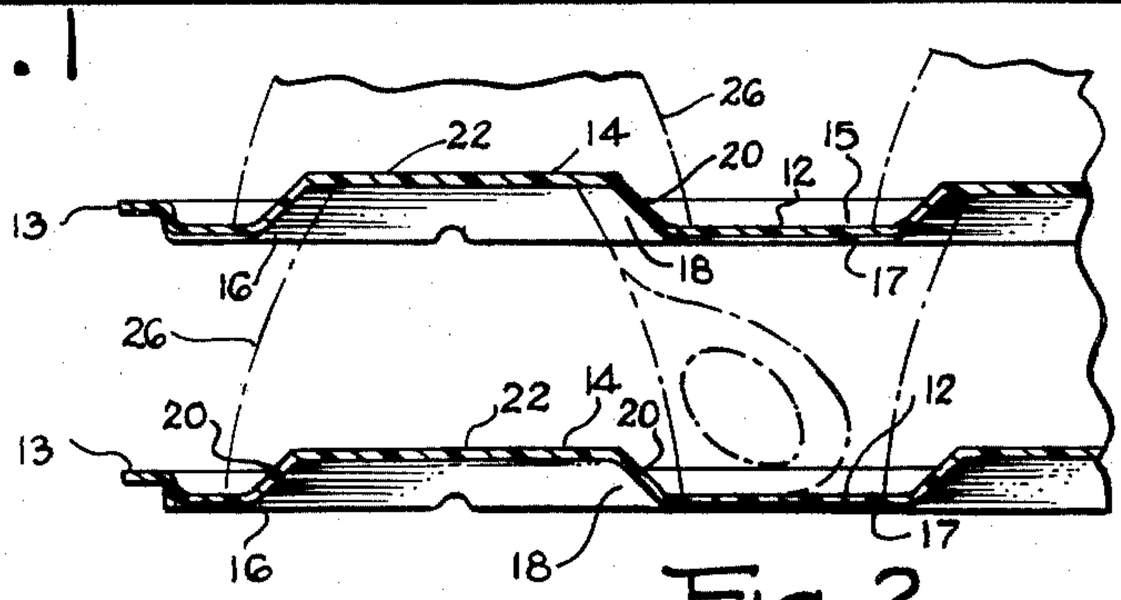

Fig. 2

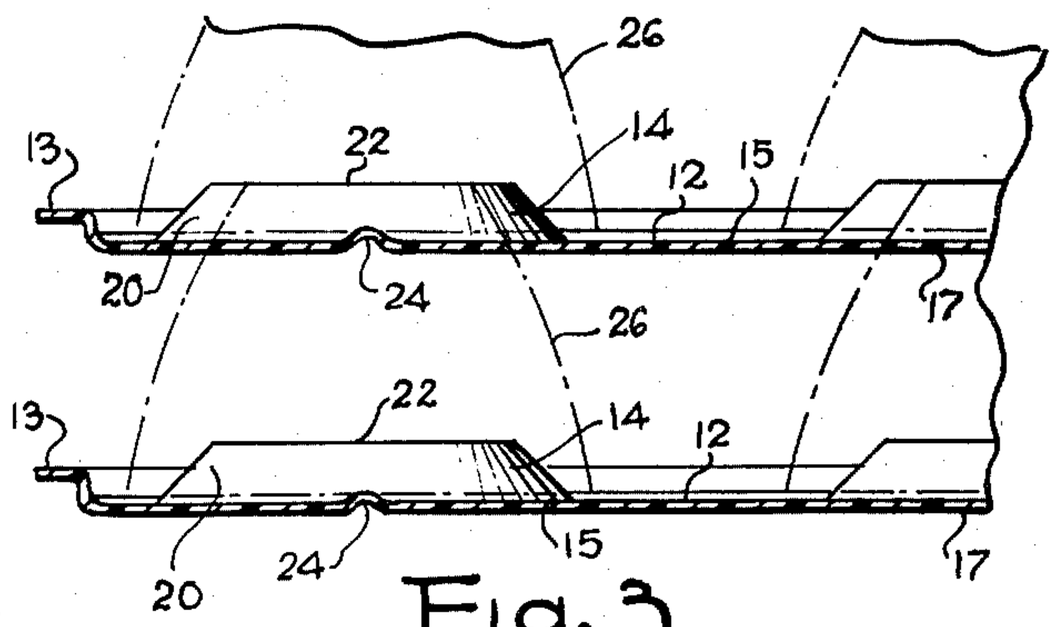

Fig. 3

INVENTOR.
Ralph Ettlinger, Jr.

BY

Ooms, McDougall, Williams & Hersh
Attorneys

June 21, 1960 R. ETTLINGER, JR 2,941,663

CUP TRAY AND STACKER

Filed July 9, 1958 2 Sheets-Sheet 2

Fig. 4

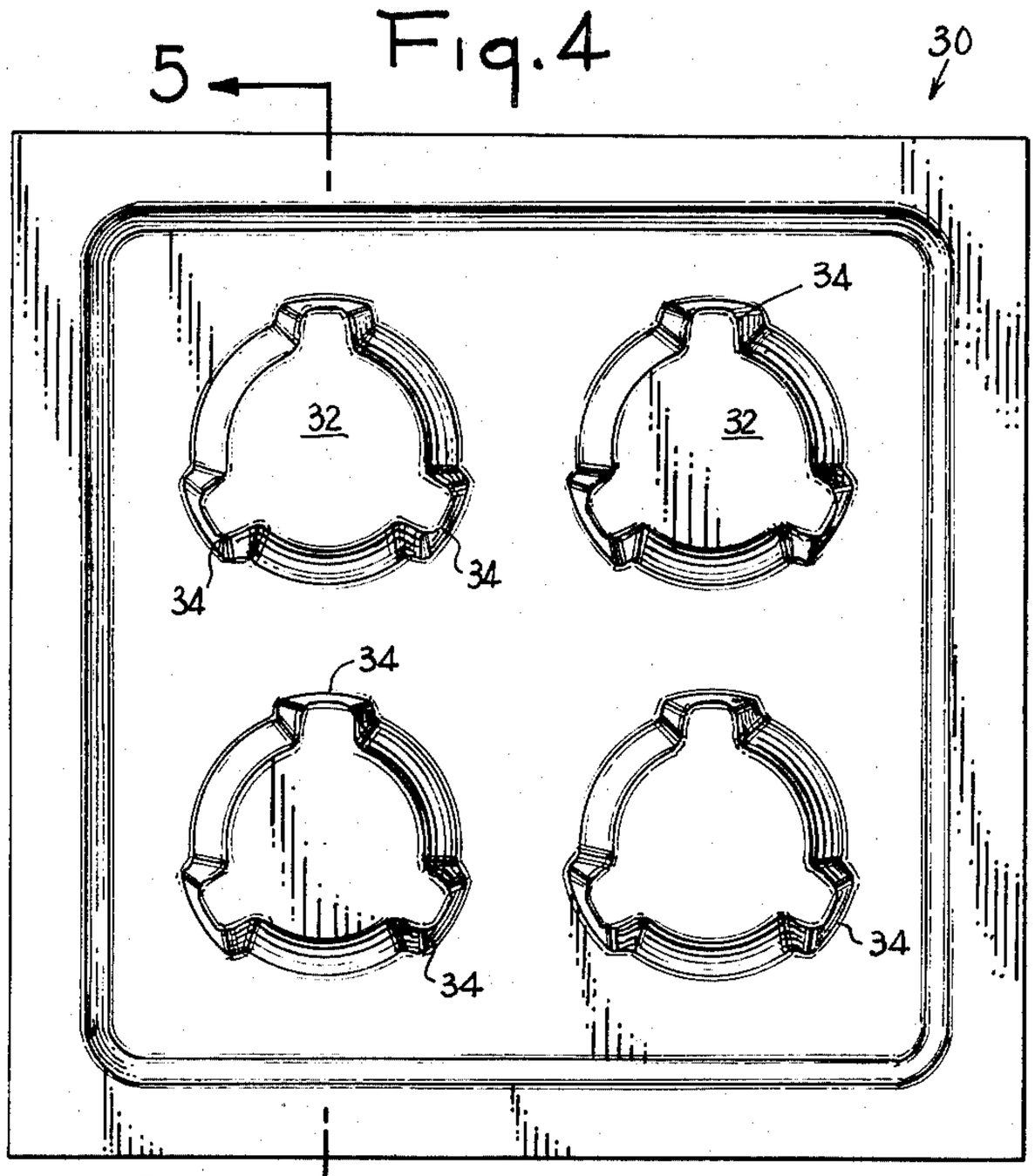

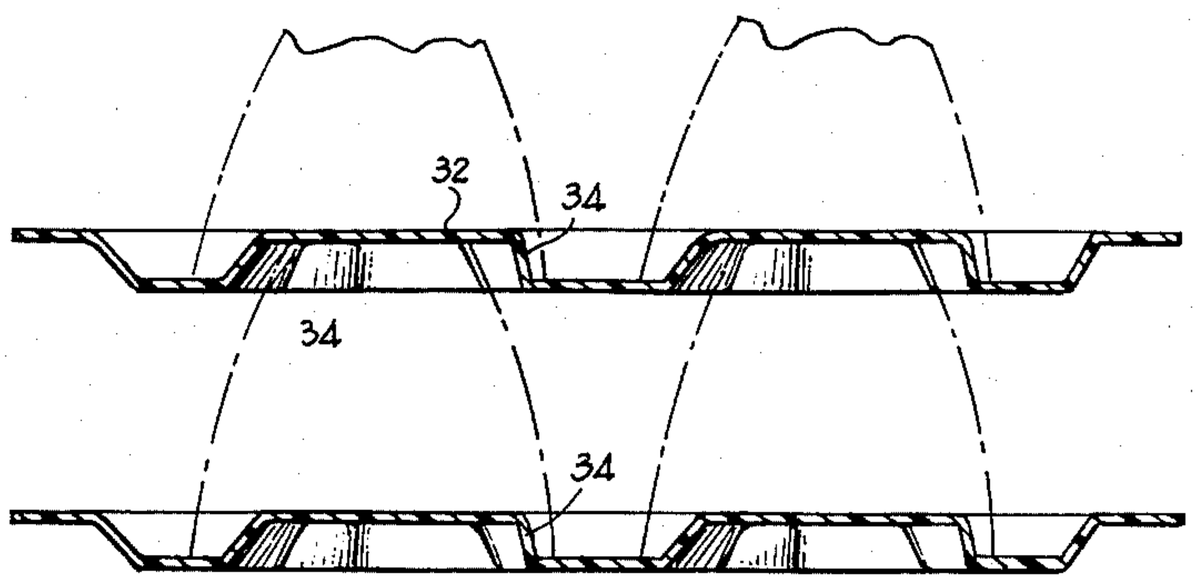

Fig. 5

INVENTOR.
Ralph Ettlinger, Jr.
BY
Toms, McDougall, Williams & Hersh
Attorneys

United States Patent Office

2,941,663

Patented June 21, 1960

2,941,663

CUP TRAY AND STACKER

Ralph Ettlinger, Jr., 1370 Lincoln Ave., S., Highland Park, Ill.

Filed July 9, 1958, Ser. No. 747,404

6 Claims. (Cl. 206—72)

This invention relates to a tray, and more particularly to a molded tray for holding cups thereon in spaced relation to each other and to a tray which can be stacked one on top of the other in a very compact manner.

An important item of expense in the operation of restaurants is the breakage of chinaware. Cups are particularly difficult to handle because even relatively minor jars and blows may be sufficient to break the cup handles. Heretofore the practice has been to carry and stack the cups on conventional trays. These trays were not provided with means for holding the cups a fixed distance apart so that when the trays of cups were transported, the individual cups frequently slid around in the tray and bumped into each other. This often caused the cup handles to break off so that the cup had to be discarded. What is needed therefore and comprises an important object of this invention is a tray having means thereon for holding the cups in spaced relation to each other to minimize the chance of their bumping together and breaking.

Another problem connected with the operation of restaurants is the storage of the chinaware. Heretofore, cups, for example, were loaded on the conventional trays, and these trays were often stacked one on top of the other, separated by a distance at least equal to the height of the cups. This arrangement was unsatisfactory because the space inside each of the cups was completely wasted. Occasionally cups have been stacked by inserting the base of one cup in the mouth of another, but this was unsatisfactory because when more than two cups were mounted on top of each other in this way, the resulting pile became unstable and fell over readily, resulting in further breakage. What is needed therefore and comprises an additional important object of this invention is a stable and compact way of stacking cups, or other dish-shaped objects.

A further object of this invention is to provide a tray having means for holding cups thereon in spaced relation to each other and which in addition can be stacked fully loaded one on top of the other while separated by a distance less than the height of the individual cups.

Yet a further object of this invention is to provide a molded tray having integrally molded formations thereon which can hold cups on the tray in spaced relation to each other and which permit fully loaded trays to be stacked one on top of the other while separated by a distance less than the height of the individual cups.

These and other objects of this invention will become more apparent when read in the light of the accompanying specification and drawings wherein:

Fig. 1 is a plan view of one modification of this invention.

Fig. 2 is a sectional view taken on the line 2—2 of Fig. 1 and looking in the direction indicated.

Fig. 3 is a sectional view taken on the line 3—3 of Fig. 1 and looking in the direction indicated.

Fig. 4 is a plan view of another possible modification of this invention.

Fig. 5 is a sectional view taken on the line 5—5 of Fig. 4 and looking in the direction indicated.

Referring now to Fig. 1 of the drawings, a tray indicated generally by the reference numeral 10, is, in this particular embodiment, formed from a moldable, fibrous or plastic sheet material. The tray comprises a generally planar support member or body portion 12, which as seen in Figs. 2 and 3, covers an area large in comparison to its thickness. The support member illustrated is rectangular in shape, although its shape is not important, and it is provided with an upwardly extending rim 13, formed around its periphery. This rim acts to strengthen the tray and retains liquids thereon, as described below.

As seen in Figs. 2 and 3, a plurality of projections 14 are disposed in uniformly spaced relation on one surface of the support member 12. The projections, in this particular embodiment are of frusto-conical shape and extend substantially perpendicular to the plane of the upper surface 15 of the support member 12.

As seen in the drawings, the projections 14 are molded into the tray. This process can be described as displacing the circular portions 16 from the plane of support member 12 to the parallel offset plane shown in the drawings. In the alternative the desired contours can be formed into the tray when molded of fibrous material or plastics or laminates. The formation of these projections in this way produces correspondingly shaped recesses 18 on the lower surface 17 of the support member, see Fig. 2. These projections or conical frustums comprise the side or flange members 20, which in this embodiment terminate in an upper surface 22 which is parallel to the planar support member 12.

The particular form of the projections is not critical, as evidenced by the modification shown in Figs. 4 and 5. Furthermore, as described below, under some circumstances, the upper surface 22 of the projections could be entirely removed leaving openings in the tray. This would result in a lighter tray and would save a considerable amount of material. In addition, it is also contemplated that the flange members 20 could be modified so they are substantially smaller in width and are disposed along only a part of the sides of each of the removed portions 16.

In addition to the projections 14 integrally formed with support member 12, spaced parallel outwardly extending rib like members 24 are formed with the support member 12 to extend outwardly radially from the projections. As seen in Fig. 1, four of these ribs intersect each of said projections 14 and are radial thereto, being disposed at 90° intervals around their center, for purposes to be described below. Three projections or more than four projections can be provided.

In operation, the mouth of each cup 26 is disposed over each of the upwardly projecting conical frustums 26. As seen in the drawings, the diameter of the base of the frustum is dimensioned to be substantially equal to the inner diameter at the mouth of the cup so that the cups will be received in substantially fitting relation thereon and, as a result, will not have much freedom to move with respect to the projections 14, and are thereby prevented from sliding when a tray loaded with cups is carried.

The lower rim of the cups rests on the four ribs 24 surrounding each of the projections. This spaces the mouth of the cup away from the top surface 15 of the planar support member 12 to permit air to circulate therein so that moisture remaining in the cup after washing can evaporate. Without this arrangement, if the mouth of the cup rested entirely on the planar surface 12, it would take a very long time for the inside of the cup to dry out. Since the purpose of the ribs is only

to space the rim of the cup away from the top surface of the planar support member, their shape is not critical and protuberances of any shape can be disposed around the periphery of each of the projections for the same purpose.

After a cup is positioned on each projection on the tray, a second layer may be started by placing a second tray over the cups on the first layer so that the base of each of these cups extends in one of the recesses **18**. For this purpose it is preferred to form the projections to provide a recess which, at its base, is dimensioned to correspond to the dimension of the foot of the cup to receive the foot of the inverted cup in substantially fitting relation. This telescoping arrangement permits the trays to be stacked one on top of the other to form a stable stack while the stacked cups are separated a distance less than the height of the cups, see Figs. 2 and 3. This means that more layers of cups can be stacked in a stable pile and in a given volume, than was heretofore possible.

As stated above, the shape of the projections **14** is not critical so the principles of this invention can be applied to trays with projections having different shapes, as long as the dimensional characteristics are met, as defined. The described tray could also be used as a service tray, stably to hold a plurality of filled cups. For this purpose, the tray would be turned over 180° so that the recessed portion **18** would face upwardly to receive the foot of the loaded cups. Thus, the filled cups would be held in a fixed position on the trays, so that the tray loaded with liquid filled cups could be transported without fear of the cups sliding around on the tray and spilling. If desired, the base of the openings could be removed to receive the cup in telescoping arrangement.

The tray shown in the modification of Figs. 4 and 5, and indicated generally by the reference numeral **30** is provided with the generally conical frustum shaped projections **32** such as were described in connection with the modification of Figs. 1–2 but of smaller dimension to provide a recessed portion having a base dimensioned to correspond with the foot of the cups. To provide projections dimensioned to correspond with the mouth of the cups, additional projecting members **34** are provided which extend radially from the base of the projections, see Fig. 5. A substantial portion of the periphery of these projecting members is substantially transverse to the plane of the tray **30**, see Fig. 5, so that the projections on this tray can better be embraced by the mouth of cups having a generally cylindrical shape, whereas the projections on the tray shown in Figs. 1–3 are better adapted to be embraced by cups having a substantially conical shape. It is apparent therefore that it may be desirable to design the shape of the projections on the trays to accord with the shape of the cups to be stacked thereon.

Since the cups, after being washed, are inserted in an inverted position on the tray, moisture remaining in the cups will drain onto the tray. In addition, when the trays are used to transport cups filled with liquids, spills occasionally occur. In all cases, it is desirable to retain the liquids on the tray rather than to permit them to fall onto the floor. This possibility was minimized by providing the trays with an upwardly projecting rim **13** around their periphery.

The invention may be embodied in other forms without departing from the spirit or essential characteristics thereof as set forth in the claims, and the present embodiment is therefore to be considered as illustrative and not restrictive, and it is intended to include all changes which come within the scope and range of the claims.

I claim:

1. Individual trays for the support of a plurality of containers wherein the containers are formed with an open mouth at one end and a closed base at an opposite end with the mouth of larger wall-to-wall dimension than the base comprising a relatively rigid structurally strong, non-fibrous, water resistant flat sheet, a plurality of projections extending in one direction from one face of the sheet and spaced apart one from the other by an amount greater than the major cross-sectional dimension of the containers and dimensioned to have a width considerably greater than height, said projections having inclined side walls to provide recesses in the opposite face of the sheet defined by side walls which extend inwardly to the base at one end of smaller dimension than the opening at the opposite end in alignment with the sheet, said base being dimensioned to receive the closed base of the containers therein, and corresponding projections from the one face defined by side walls which extend similarly inwardly from the end of largest dimension less the dimension of the mouth of the containers to the end of smaller dimension away from the sheet for receiving the base of the container within the opening and for receiving the mouth of the container about the projection, and upstanding ribs formed in the sheet to extend crosswise between the projections and on which the mouth of the container rests when positioned about the projection of the container from the adjacent face of the sheet whereby to provide access openings to the interior of the container when the one side of the tray is uppermost and the container is inverted for storage with the mouth of the container extending downwardly about the projection and with the base of the container extending upwardly to be received in nesting relationship within the opening of the tray next above, and when the other side of the tray is uppermost, to provide support for said containers when in position of use with the mouth of each container uppermost and with the base of each container seated within an opening.

2. A tray as claimed in claim 1 in which the projections formed in the sheet are of circular section.

3. A tray as claimed in claim 1 in which the projections are contoured to a frusto-conical shape.

4. A tray as claimed in claim 1 in which the upstanding ribs extend crosswise and lengthwise between the projections.

5. A tray as claimed in claim 1 in which the projections are aligned in crosswise and lengthwise rows and in spaced-apart relationship within the rows.

6. A tray as claimed in claim 1 in which the sheet is formed of a molded plastic.

References Cited in the file of this patent

UNITED STATES PATENTS

Re. 20,960	Gates	Jan. 3, 1939
D. 155,114	Williams	Sept. 6, 1949
2,063,319	Lee	Dec. 8, 1936
2,160,893	Newsom	June 6, 1939
2,210,283	Cowan	Aug. 6, 1940
2,270,030	Benoit	Jan. 13, 1942
2,773,624	Knieriem	Dec. 11, 1956
2,813,652	Parsons	Nov. 19, 1957
2,826,333	Rodemich	Mar. 11, 1958