Oct. 13, 1959 A. LORENZ 2,908,321

ARTICLE OF REPOSE FOR SUPPORTING THE BODY OF A PERSON

Filed April 26, 1956 2 Sheets-Sheet 1

FIG. 1

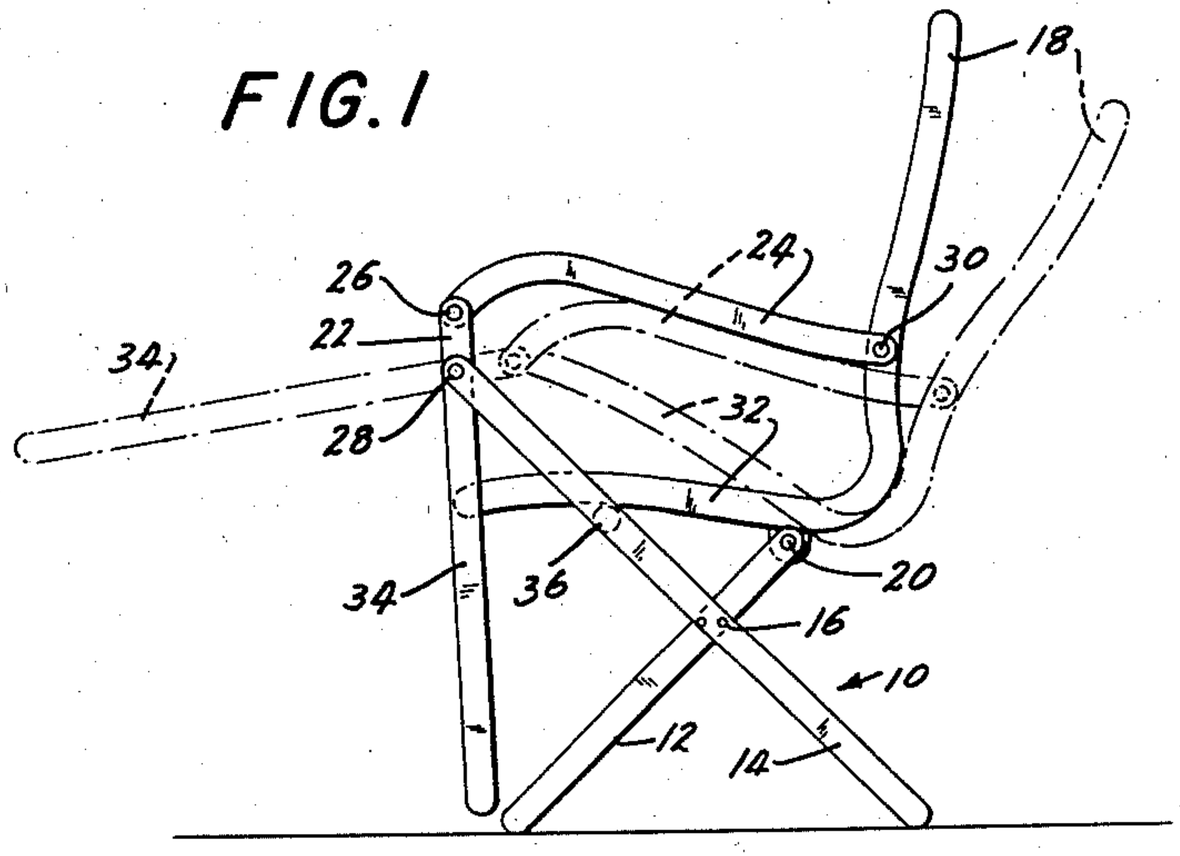

FIG. 2

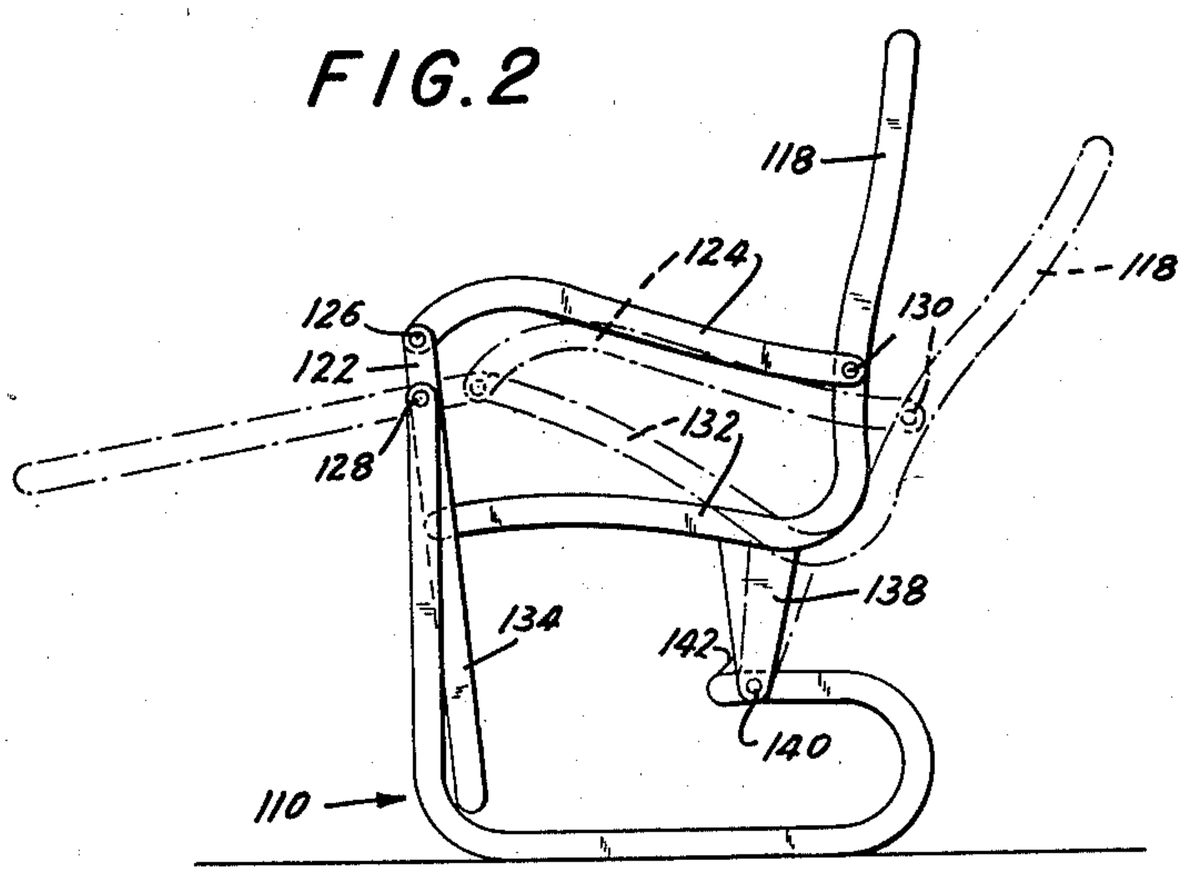

INVENTOR.
ANTON LORENZ

BY

ATTORNEY

Oct. 13, 1959 A. LORENZ 2,908,321

ARTICLE OF REPOSE FOR SUPPORTING THE BODY OF A PERSON

Filed April 26, 1956 2 Sheets-Sheet 2

FIG. 3

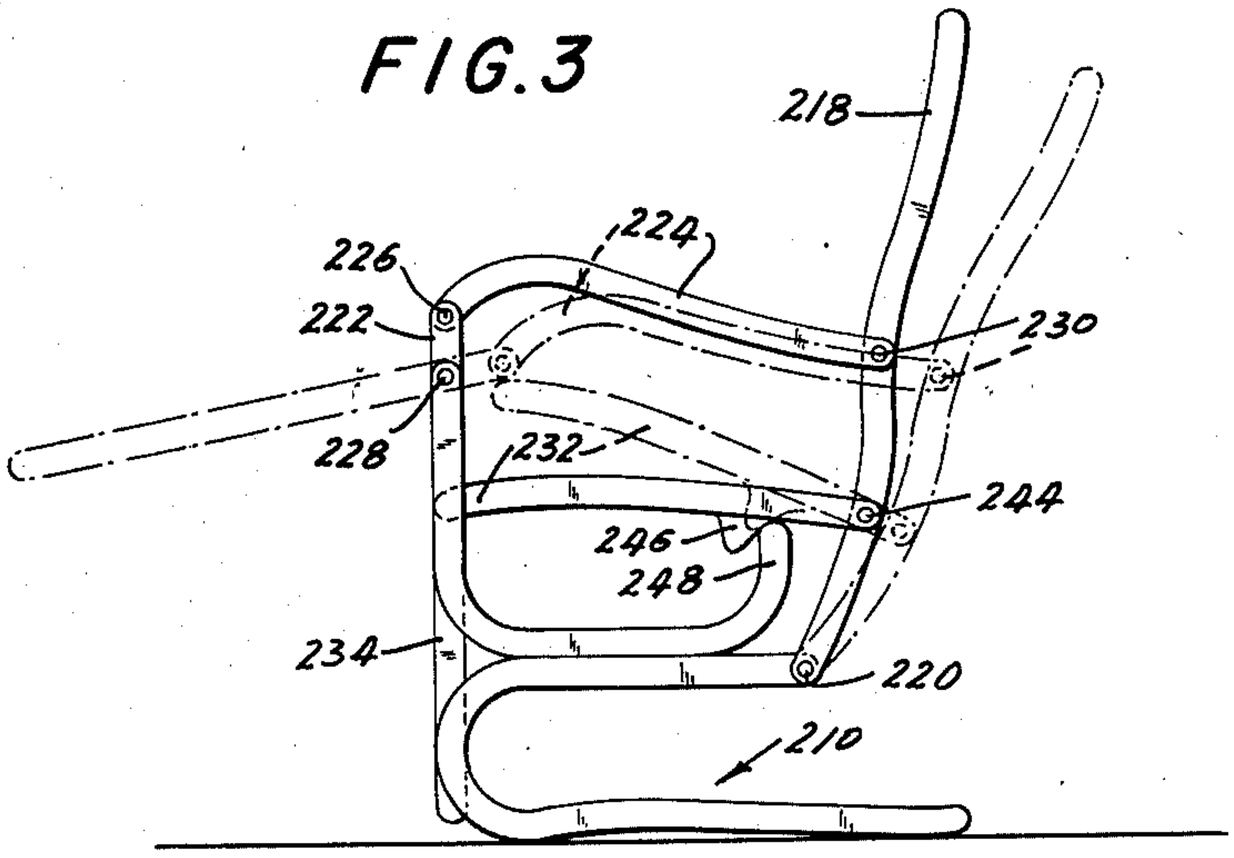

FIG. 4

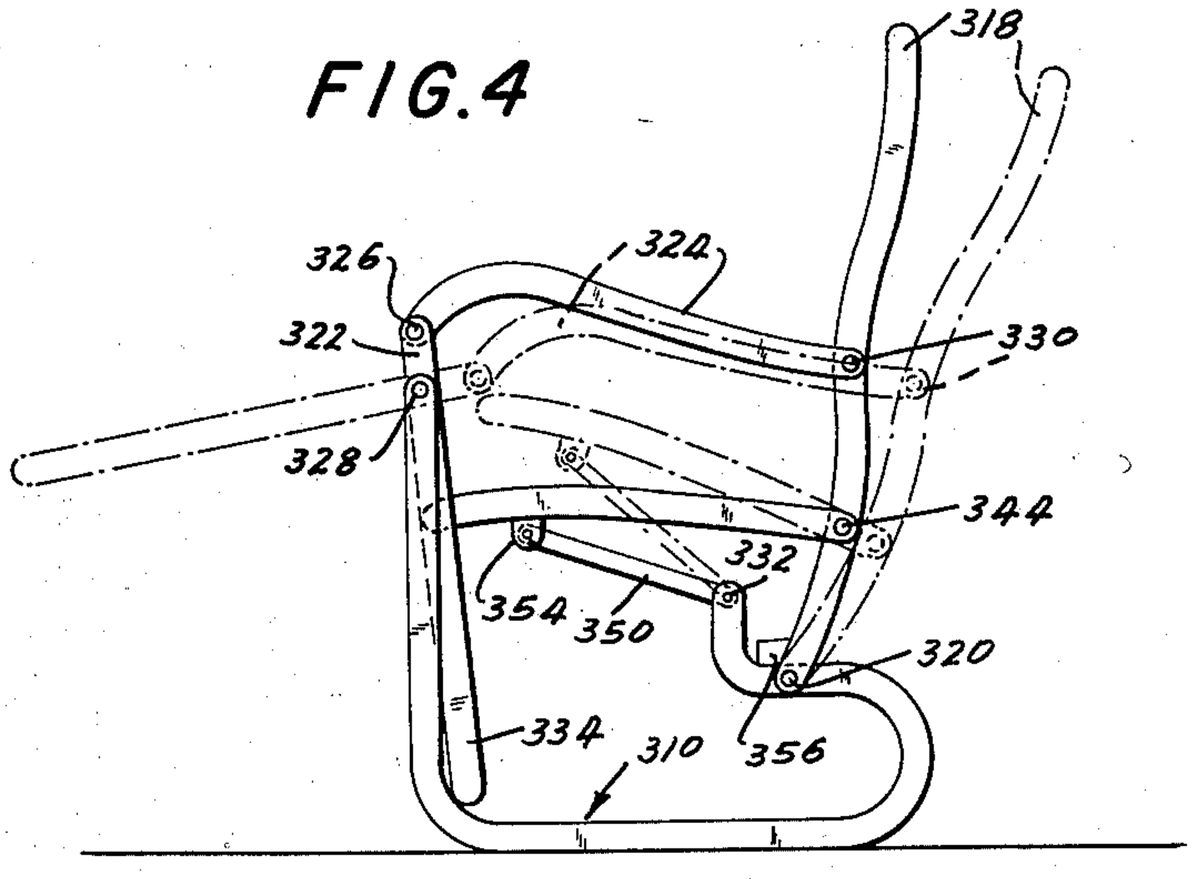

INVENTOR.
ANTON LORENZ

BY

ATTORNEY

United States Patent Office

2,908,321

Patented Oct. 13, 1959

2,908,321

ARTICLE OF REPOSE FOR SUPPORTING THE BODY OF A PERSON

Anton Lorenz, Boynton Beach, Fla.

Application April 26, 1956, Serial No. 580,765

8 Claims. (Cl. 155—106)

The present invention relates generally to reclining chairs, and in particular to an improved reclining chair including a body-supporting unit having a seat and back-rest and a leg-rest coordinated for movement with the body-supporting unit.

The well known reclining chair comprises a support and a body-supporting unit including a back-rest and seat pivotally mounted on the support. The body-supporting unit may include a rigid seat and back-rest which moves together as the chair occupant leans against the back-rest, or may include a body-supporting unit having a seat and back-rest mounted respectively for inclining and reclining movement in a prescribed relationship under the control of the seat occupant. Such chairs usually incorporate a leg-rest which is mounted for coordinated movement to an elevated leg-supporting position as a function of or in response to the reclining movement.

It is an object of the present invention to provide an improved reclining chair of the aforesaid general construction. Specifically, it is within the contemplation of the invention to provide a reclining chair which is particularly suited to be manufactured at a relatively low cost, yet achieves the requisite coordinated movement of the several components of the chair. Advantageously, such chairs are suited to find widespread application in the medium and low price fields, particularly for use as outdoor furniture.

In accordance with an illustrative embodiment demonstrating features and advantages of the present invention there is provided a reclining chair which comprises a support and a body-supporting unit including a back-rest and seat pivotally mounted on the support. The seat is movable into a prescribed inclined position with its forward end elevated in response to pivotal movement of the back-rest into a prescribed reclining position, either as a result of being integral with the back-rest or being coordinated for inclining movement relative to the back-rest. A leg-rest is provided for the chair with means which pivotally mount the leg-rest on the support which includes a double-arm lever pivoted on the support and having one arm connected to the leg-rest, and linkage means which operatively connect the leg-rest to the back-rest for moving the leg-rest to various leg-supporting positions in response to movement of the back-rest to various reclined positions. The linkage means is constructed and arranged to bring the leg-rest to an elevated position substantially at the level of the elevated forward end of the seat in response to movement of the back-rest into a prescribed reclining position and the corresponding movement of the seat into an inclined position.

The above brief description, as well as further objects, features and advantages of the present invention will be best appreciated by reference to the following detailed description of presently preferred, but illustrative, embodiments, when taken in conjunction with the accompanying drawings, wherein:

Fig. 1 is a side elevational view of an improved reclining chair embodying features of the present invention,

with the dotted lines showing the chair in its reclining position;

Fig. 2 is a side elevational view of a further embodiment of reclining chair demonstrating features of the present invention, with the dotted lines showing the chair in the reclining position;

Fig. 3 is a side elevational view of a still further embodiment of reclining chair embodying features of the present invention, with the dotted line showing the chair in a reclining position; and,

Fig. 4 is a side elevational view of a still further embodiment of reclining chair demonstrating features of the invention, with the dotted line showing the chair in the reclining position.

Referring now specifically to Fig. 1 of the drawings, there is shown an improved reclining chair according to the present invention, wihch includes a support generally designated by the reference numeral **10**. The support includes two U-shaped tubular frame members **12**, **14** which are arranged in criss-cross relationship relative to each other, with the bight sections of the frame in contact with the floor and with the legs extending across each other and rigidly connected to each other by appropriate means, such as the pins or bolts **16**. In this embodiment a rigid body-supporting unit including a back-rest **18** and a seat **32** is swingably mounted on the support **10** at a main pivot **20** located at the juncture between the back-rest **18** and the seat **32** for pivotal movement from the upright or sitting position illustrated in Fig. 1 by the full lines to the tilted reclining position illustrated by the broken lines.

At each side of the chair, there is provided a leg-rest supporting and controlling linkage which mounts the leg-rest **34** for movement into various elevated leg-supporting positions in the response to movement of the back-rest **18** to various reclining positions. The leg-rest supporting and control linkage includes a double-arm lever **22** which is pivotally supported on the frame member **14** of the support **10** intermediate its ends at a pivot **28** to thereby provide a first arm extending upwardly from the pivot **28** and a second arm extending downwardly from the pivot **28**. The upwardly extending arm of the double-arm lever **22** is connected to the back-rest **18** by a connecting link **24** which has its forward end connected to the double-arm lever **22** at the pivotal connection **26** and has its rearward end connected to the back-rest **18** at the pivotal connection **30**. The leg-rest **34** is rigidly connected to the downwardly extending arm of the double-arm lever **28** so as to participate in the movements of the lever **22**. The leg-rest **34** may be rigidly connected by screws or the like or may be integral with the lever **22**, as shown in the drawings. As may be appreciated by inspecting Fig. 1, the stationary pivot **28** of the double-arm lever on the support is disposed at a location above the plane of the seat **32** when the seat is in the sitting position. The further pivotal connection **30** at the rear end of the connecting link **24** to the back-rest **18** is at a point spaced above the main pivot or mount **20** of the body-supporting unit on the support **10**. The upwardly extending arm of the double-arm lever **22** intermediate the pivots **28**, **26**, the connecting link **24**, and a portion of the body-supporting unit intermediate the pivots **30** and **20** serve as movable links of the controlling linkage, with the portion of the support **10** intermediate the pivots **20**, **28** serving as the stationary link of the controlling linkage. This linkage is constructed and arranged to bring the leg-rest **34** into an elevated position substantially at the level of the elevated forward end of the seat in response to movement of the back-rest **18** into the prescribed reclining position and the corresponding movement of the seat into the prescribed inclined position. By separately mounting the leg-rest on the support and the proper coordination of its movement, the leg-

rest may be brought into the required elevated leg supporting position as a function of the reclining movement of the body-supporting unit in a relative simple manner and with a relatively inexpensive linkage.

In order to establish the sitting position of the body-supporting unit, a stop **36** is fixed to the frame member **14** in a position to underlie and abut the undersurface of the seat **32** when the latter is in the sitting position. The arrangement of the leg-rest controlling linkage **22, 24** is such as to achieve a self-locking action as the link **22, 24** moves into a substantially in-line position thereby establishing the extreme reclining position of the body supporting unit.

In use, the chair occupant is seated in the chair when the body-supporting unit is in the upright sitting position and upon leaning against the back-rest, the body-supporting unit is brought into the reclined position illustrated by the broken lines. Simultaneously the leg-rest supporting and controlling linkage is effective to elevate the leg-rest **34** to a position extending forwardly of and substantially at the level of the elevated forward end of the seat **32**, with the fully reclined position being established by the self-locking feature of the leg-rest supporting and controlling linkage.

Referring now specifically to Fig. 2 of the drawings, there is shown a further embodiment of reclining chair according to the present invention, which includes a support generally designated by the reference numeral **110**. In this embodiment, a rigid body supporting unit including a back-rest **118**, a seat **132** and a downward extension **138** is swingably mounted on the support **110** at a main pivot **140** on the downward extension **138**. As before, the body-supporting unit is mounted for pivotal movement from the sitting position illustrated in Fig. 2 by the full lines to the reclining position illustrated by the broken lines.

At each side of the chair there is provided a leg-rest supporting and controlling linkage which mounts the leg-rest **134** for movement into various elevated leg-supporting positions in response to movement of the back-rest **118** to various reclining positions. The leg-rest supporting and controlling linkage includes a double-arm lever **122** which is pivotally supported on the support **110** intermediate its ends at a stationary pivot **128** to thereby provide a first arm extending upwardly from the pivot **128** and a second arm extending downwardly from the pivot **128**. The upwardly extending arm of the double-arm lever **122** is connected to the back-rest **118** by a connecting link **124** which has its forward end connected to the double-arm lever at the pivotal connection **126** and has its rearward end connected to the back-rest **118** at the pivotal connection **130**. The leg-rest **134** is rigidly connected to the downwardly extending arm of the double-arm lever **128** so as to participate in the movements of the lever **122**. The leg rest **134** may be rigidly connected by screws or the like with the lever or may be integral with the latter as shown in the drawings. As may be appreciated by inspecting Fig. 2, the stationary pivot **128** of the double-arm lever **122** on the support is disposed at a location above the plane of the seat **132** when the seat is in the sitting position. The pivotal connection **130** at the rear end of the connecting link **124** to the back-rest **118** is at a point spaced above the main pivot or mount **120** of the body-supporting unit on the support **110**. The upwardly extending arm of the double-arm **122** lever intermediate the pivot **128, 126**, the connecting link **124**, and the portion of the body-supporting unit intermediate the pivots **130** and **120** serves as movable links of the controlling linkage, with the portion of the support **110** intermediate the pivot **120, 128** serving as the stationary link of the controlling linkage. This linkage is constructed to bring the leg rest **134** into an elevated position substantially at the level of the elevated forward end of the seat in response to movement of the back-rest **118** into the prescribed reclining position.

In order to establish the sitting position of the body-supporting unit, a stop **142** is fixed to the support **110** in a position to abut the extension **138** when the seat is substantially horizontal. The arrangement of the leg-rest controlling linkage **122, 124** is such as to achieve a self-locking action as the link **122, 124** moves into a substantially in-line position to thereby establish the extreme reclining position of the body supporting unit.

Referring now specifically to Figure 3, there is shown a further reclining chair according to the present invention which includes a support generally designated by the reference numeral **210** made up of appropriate tubular members bent to provide a frame. In this embodiment, the body-supporting unit includes a back-rest **218** and a seat **232** mounted on the support for reclining and inclining movement respectively. Specifically, the back-rest is pivoted at its lower end at a back-rest pivot **220** on the support **210** and the seat **232** is pivoted on the back-rest **218** at a seat pivot **244** spaced above the back-rest pivot **220**. Appropriate seat control means are provided for cordinating the inclining movement of the seat to the reclining movement of the back-rest. In this embodiment, the seat control means is in the form of a cam follower **246** which is fixed to and depends from the under-surface of the seat **232** and is in engagement with a camming element **248** formed by providing a substantially upstanding extension on the frame **210**.

At each side of the chair there is provided a leg-rest supporting and controlling linkage which mounts the leg-rest **234** for movement into various elevated leg-supporting positions in response to movement of the back-rest to various reclining positions. The leg-rest supporting and controlling linkage includes a double arm lever **222** which is pivotally supported on the support **210** intermediate its ends at a stationary pivot **228** to thereby provide a first arm extending upwardly from the pivot **228** and a second arm extending downwardly from the pivot **228**. The upwardly extending arm of the double arm lever **222** is connected to the back-rest **218** by a connecting link **224** which has its forward end connected to the double arm lever **222** at the pivotal connection **226** and has its rearward end connected to the back-rest **218** at the pivotal connection **230**. The leg-rest **234** is rigidly connected to the downwardly extending arm of the double-arm lever **222** so as to participate in the movements of the lever **222**. As may be appreciated by inspecting Fig. 3, the stationary pivot **228** or the double-arm lever **222** on the support **210** is disposed at a location above the plane of the seat **232** when the seat is in the sitting position. Further the pivotal connection **230** at the rear end of the connecting link **224** to the back-rest **218** is at a point spaced above the back-rest pivot or mount **220** of the body-supporting means. The upwardly extending arm of the double arm lever **222** intermediate the pivot **228, 226**, the connecting link **224** and a portion of the back-rest intermediate the pivots **230** and **220** serve as movable links of the controlling linkage, with the portion of the support **10** intermediate the pivot **220, 228** serving as the stationary link of the controlling linkage. This linkage is constructed to bring the leg-rest **234** into an elevated position substantially at the level of the elevated forward end of the seat when the latter is inclined via the seat control means **246, 248** in response to movement of the back-rest **18**.

Referring now specifically to Figure 4, there is shown a further reclining chair according to the present invention which includes a support generally designated by the reference numeral **310**, made up of appropriate tubular members bent to provide a frame. In this embodiment, the body-supporting unit includes a back-rest **318** and a seat **332** mounted on the support **310** for reclining and inclining movement respectively. Specifically, the back-rest is pivoted at its lower end at a back-rest pivot **320** on the support **310** and the seat **332** is

pivoted on the back-rest 318 at a seat pivot 344 spaced above the back-rest pivot 320. Appropriate means are provided for coordinating the inclining movement of the seat to the reclining movement of the back-rest. In this embodiment, the seat control means is in the form of a link 350 which has a pivotal connection 332 at its rearward end to the support 310 and a pivotal connection 354 at its forward end to the seat 332.

At each side of the chair there is provided a leg-rest supporting and controlling linkage which mounts the leg-rest 334 for movement into various elevated leg-supporting positions in response to movement of the back-rest to various reclining positions. The leg-rest supporting and controlling linkage includes a double-arm lever 322 which is pivotally supported on the support 310 intermediate its ends at a stationary pivot 328 to thereby provide a first arm extending upwardly from the pivot 328 and a second arm extending downwardly from the pivot 328. The upwardly extending arm of the double-arm lever 322 is connected to the back-rest 318 by a connecting link 324 which has its forward end connected to the double-arm lever at the pivotal connection 326 and has its rearward end connected to the back-rest 318 at the pivotal connection 330. The leg-rest 334 is rigidly connected to the downwardly extending arm of the double arm lever 328 so as to participate in the movements of the lever 322. As may be appreciated by inspecting Fig. 4, the stationary pivot 328 or the double-arm lever 322 on the support 310 is disposed at a location above the plane of the seat 332 when the seat is in the sitting position. Further the pivotal connection 330 at the rear end of the connecting links 324 to the back-rest 318 is at a point spaced above the main pivot or mount 320 of the back-rest. The upwardly extending arm of the double-arm lever intermediate the pivot 328, 326, the connecting link 324 and the portion of the back-rest 318 intermediate the pivots 330 and 320 serve as movable links of the controlling linkage, with the portion of the support 310 intermediate the pivot 320, 328 serving as the stationary link of the controlling linkage.

In order to establish the sitting position of the body-supporting means, a stop 356 is fixed to the frame in position to abut the extension of the back-rest 318 adjacent the pivot 320. The arrangement of the leg-rest controlling linkages 322, 324 is such as to achieve a self-locking action as the link 322, 324 moves into a substantially in-line position to thereby establish the extreme reclining position of the body-supporting means.

A latitude of modification, change and substitution is intended in the foregoing disclosure and in some instances some features of the invention will be employed without a corresponding use of other features. Accordingly it is appropriate that the appended claims be construed broadly and in a manner consistent with the spirit and scope of the invention herein.

What I claim is:

1. A reclining chair comprising a support, body-supporting means including a back-rest and seat rigid with each other and pivotally mounted on said support, said seat being movable from a normal horizontal position into a prescribed inclined position with its forward end elevated in response to pivotal movement of said back-rest into a prescribed reclined position, a leg-rest, a double-arm lever having a pivot spaced above said seat in its horizontal position and pivotally mounting said leg-rest on said support, and linkage means operatively connected to said double-arm lever above said pivot and to said back-rest above the pivotal mount of said body-supporting means for moving said leg-rest to various elevated positions in response to movement of said back-rest to various reclined positions, said linkage means being constructed and arranged to bring said leg-rest into an elevated position substantially at the level of the elevated forward end of said seat in response to movement of said back-rest into said prescribed reclining position and the corresponding movement of said seat into said prescribed inclined position.

2. A reclining chair comprising a support, body-supporting means including a back-rest and seat each pivotally mounted on said support at a first pivot, linkage means for moving said seat from a normal horizontal position into a prescribed inclined position with its forward end elevated in response to pivotal movement of said back-rest into a prescribed reclined position, a leg-rest, leg-supporting means including a second pivot spaced above said seat in its horizontal position and pivotally mounting said leg-rest on said support, and further linkage means operatively connected to said leg-rest supporting means above said second pivot and to said back-rest above said first pivot for moving said leg-rest to various elevated positions in response to movement of said back-rest to various reclined positions, said further linkage means being constructed and arranged to bring said leg-rest into an elevated position substantially at the level of the elevated forward end of said seat in response to movement of said back-rest into said prescribed reclining position and the corresponding movement of said seat into said prescribed inclined position.

3. A reclining chair comprising a support, a back-rest pivotally mounted on said support and movable from a sitting position into a reclining position, a seat rigid with said back-rest and extending substantially horizontally in said sitting position of said back-rest, said seat being brought into an inclined position with its forward end elevated in response to movement of said back-rest into said reclining position, a leg-rest, a leg-rest pivot for said leg-rest on said support above the level of said seat in said sitting position and mounting said leg-rest for movement out of a retracted position beneath said seat, said leg-rest being movable from said retracted position to various elevated positions, and linkage means pivotally connected to said leg-rest above said leg-rest pivot and operatively connected to said back-rest for coordinating the movement of said leg-rest to the back-rest, said linkage means being constructed and arranged to bring said leg-rest into a prescribed elevated position substantially at the level of the elevated forward end of said seat in response to movement of said back-rest into said reclining position and the corresponding movement of said seat into said inclined position.

4. A reclining chair comprising a support, a back-rest pivotally mounted on said support and movable from a sitting position into a reclining position, a seat pivotally mounted on said back-rest and extending substantially horizontally in said sitting position of said back-rest, means for moving said seat into an inclined position with its forward end elevated in response to movement of said back-rest into said reclining position, a leg-rest having supporting arms, leg-rest pivot means operatively connected to said supporting arms of said leg-rest and to said support above the level of said seat in said sitting position and pivotally mounting said leg-rest on said support for movement out of a retracted position beneath said seat, said leg-rest being movable from said retracted position to various elevated positions, and linkage means pivotally connected to said supporting arms of said leg-rest above said leg-rest pivot means and to said back-rest for coordinating the movement of said leg-rest to the back-rest, said linkage means being constructed and arranged to bring said leg-rest into a prescribed elevated position substantially at the level of the elevated forward end of said seat in response to movement of said back-rest into said reclining position and the corresponding movement of said seat into said inclined position.

5. A reclining chair comprising a support, a back-rest pivotally mounted on said support and movable from a sitting position into a reclining position, a seat rigid with said back-rest and extending substantially hori-

zontally in said sitting position of said back-rest, said seat being movable into an inclined position with its forward end elevated in response to movement of said back-rest into said reclining position, a leg-rest, linkage means pivotally mounting said leg-rest on said support at a leg-rest pivot for movement from a retracted position beneath said seat to various elevated position, said linkage means being arranged to provide a downwardly extending long lever arm for supporting said leg-rest and an upwardly extending short lever arm adapted to be connected to a driving linkage, and a driving linkage operatively connected to said short lever arm above said leg-rest pivot and to said back-rest for coordinating the movement of said leg-rest to the back-rest, the lever arms of said linkage means being proportioned relative to each other to bring said leg-rest to a prescribed elevated position substantially at the level of the elevated forward end of said seat in response to movement of said back-rest into said reclining position and the corresponding movement of said seat into said inclined position.

6. A reclining chair comprising a support, a back-rest pivotally mounted on said support and movable from a sitting position into a reclining position, a seat movable relative to said back-rest and extending substantially horizontally in said sitting position of said back-rest, means for moving said seat into an inclined position with its forward end elevated in response to movement of said back-rest into said reclining position, a leg-rest, linkage means pivotally mounting said leg-rest on said support at a leg-rest pivot for movement from a retracted position beneath said seat to various elevated position, said linkage means being arranged to provide a downwardly extending long lever arm for supporting said leg-rest and an upwardly extending short lever arm adapted to be connected to a driving linkage, and a driving linkage operatively connected to said short lever arm above said leg-rest and to said back-rest for coordinating the movement of said leg-rest to the back-rest, the lever arms of said linkage means being proportioned relative to each other to bring said leg-rest to a prescribed elevated position substantially at the level of the elevated forward end of said seat in response to movement of said back-rest into said reclining position and the corresponding movement of said seat into said inclined position.

7. A reclining chair comprising a support, body-supporting means including a back-rest and seat rigidly connected to each other and pivotally mounted on said support at a first pivot, a leg-rest and a leg-rest supporting and controlling linkage pivotally mounting said leg-rest on said support at a second pivot and operatively connected to said back-rest for moving said leg-rest to various elevated positions in response to movement of said back-rest to various reclined positions, said leg-rest control linkage including a double-arm lever pivotally mounted on said support intermediate its end to provide said second pivot and having one arm connected to said leg-rest, and a connecting link having a pivotal connection to the other arm of said double-arm lever above said second pivot and a pivotal connection to said back-rest above said first pivot, said one arm of said double-arm lever, said connecting link and the portion of said back-rest intermediate the pivotal connection to said connecting link and said first pivot serving as movable links of said leg-rest control linkage and the portion of said support intermediate said first and second pivots serving as a stationary link of said leg-rest control linkage.

8. A reclining chair comprising a support, body-supporting means including a back-rest pivotally mounted on said support at a first pivot for reclining movement, a seat pivotally mounted on said back-rest for inclining movement, seat control means operatively connected to said seat for inclining said seat in response to said reclining movement, a leg-rest, and a leg-rest controlling and supporting linkage pivotally mounting said leg-rest on said support at a second pivot and operatively connected to said back-rest for moving said leg-rest to various elevated positions in response to reclining movement of said back-rest, said leg-rest control linkage including a double-arm lever pivotally mounted on said support intermediate its end to provide said second pivot and having one arm connected to said leg-rest, and a connecting link having a pivotal connection to the other arm of said double-arm lever above said second pivot and a pivotal connection to said back-rest above said first pivot, said one arm of said double-arm lever, said connecting link and the portion of said back-rest intermediate the pivotal connection to said connecting link and said first pivot serving as movable links of said leg-rest control linkage and the portion of said support intermediate said first and second pivots serving as a stationary link of said leg-rest control linkage.

References Cited in the file of this patent

UNITED STATES PATENTS

416,906	Flowers	Dec. 10, 1889
518,751	Chambers	Apr. 24, 1894
2,508,109	Glasco	May 16, 1950
2,774,412	Luckhardt	Dec. 18, 1956

FOREIGN PATENTS

711,928	France	July 8, 1931