May 13, 1958 J. KRONISH 2,834,026

DEVICE FOR WASHING BEDPANS AND URINALS

Filed Dec. 26, 1952

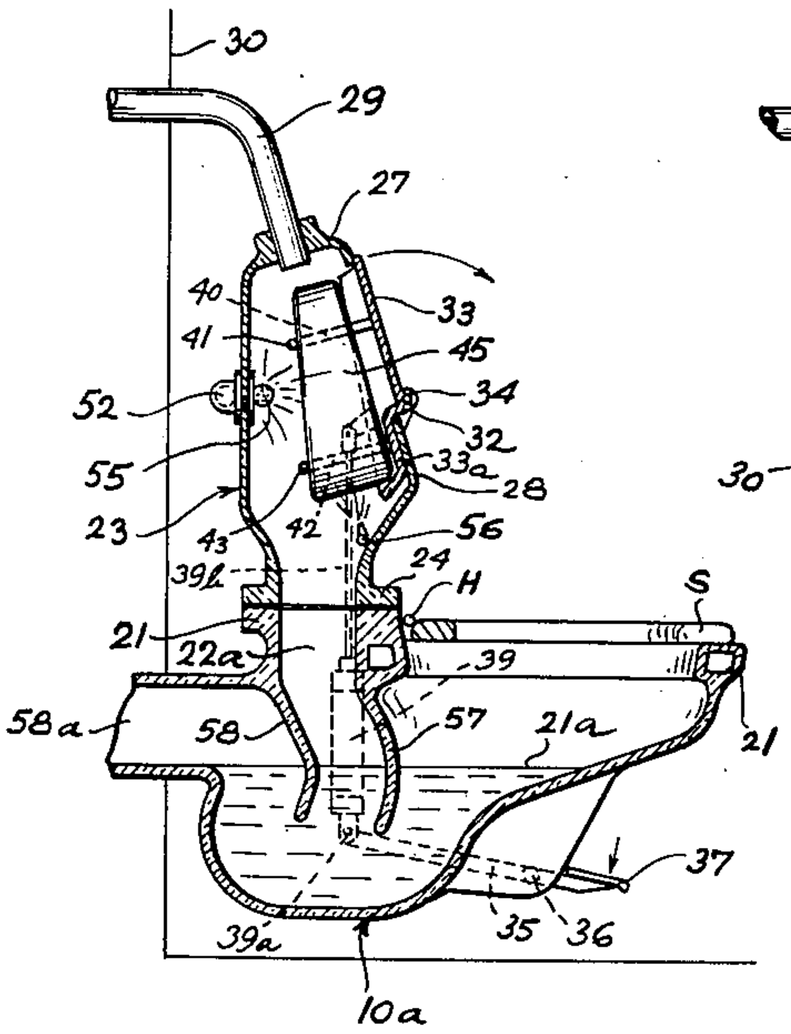

FIG. 3.

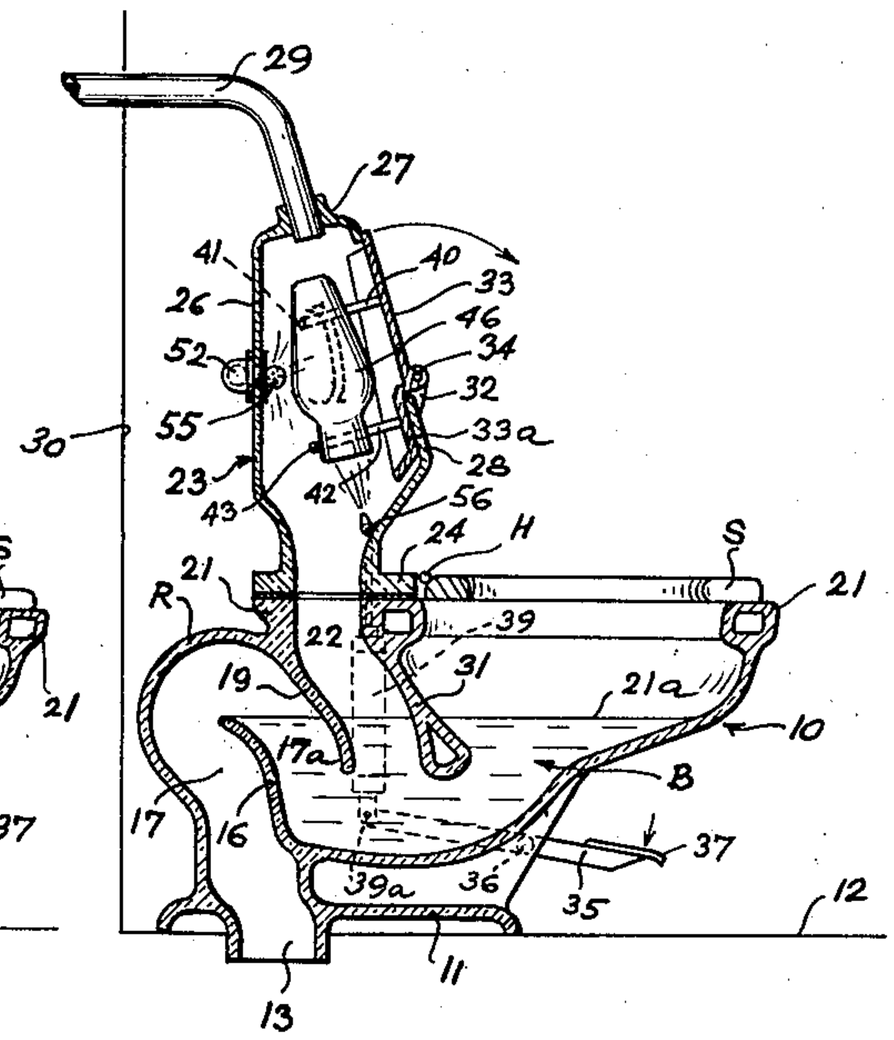

FIG. 2.

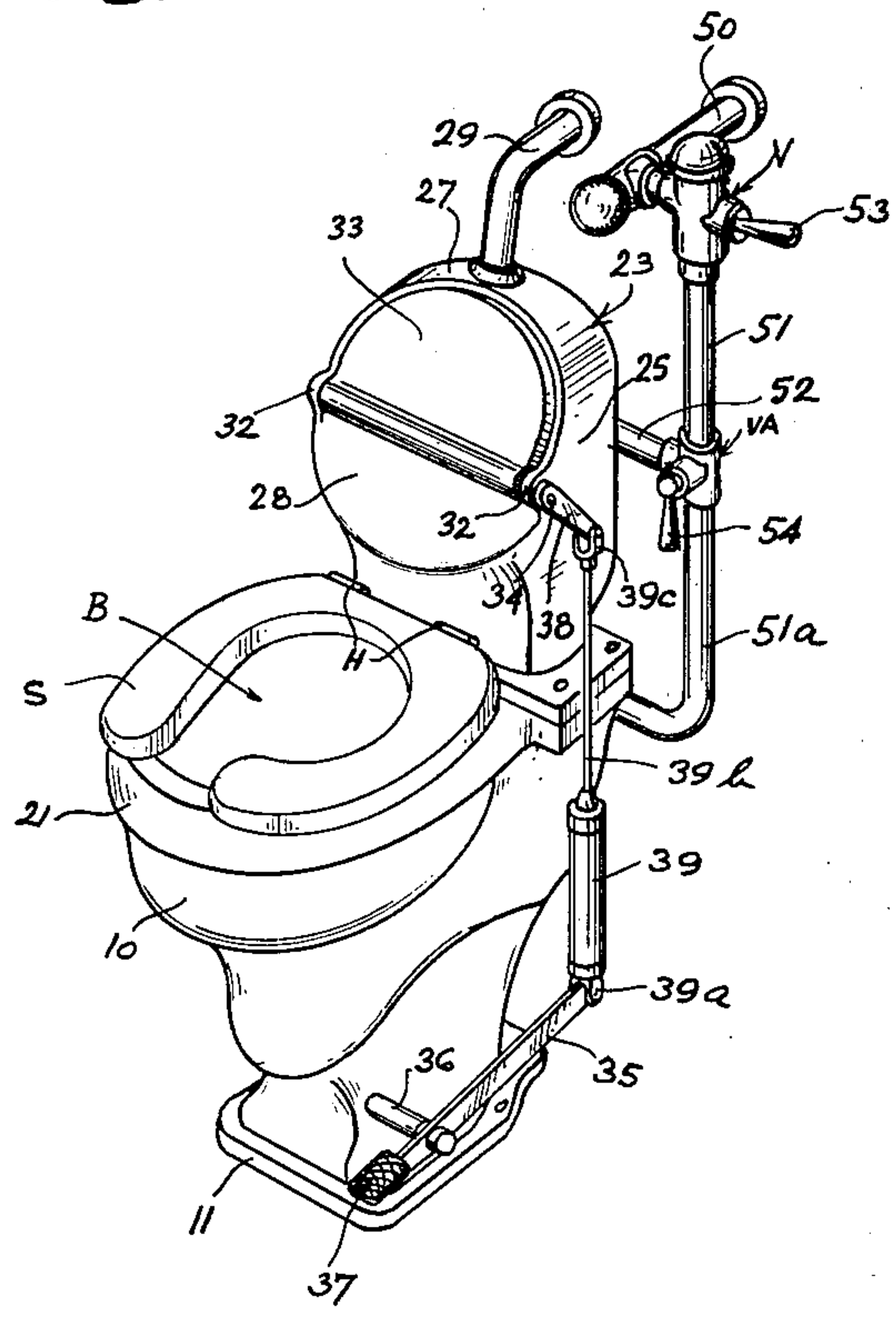

FIG. 1.

INVENTOR.
JOSEPH KRONISH
BY
Mock & Blum
ATTORNEYS

United States Patent Office

2,834,026

Patented May 13, 1958

2,834,026

DEVICE FOR WASHING BEDPANS AND URINALS

Joseph Kronish, Mount Vernon, N. Y.

Application December 26, 1952, Serial No. 328,033

1 Claim. (Cl. 4—10)

My invention relates to a new and improved device for washing bed-pans and urinals.

It has been common practice in hospitals, for many years, to provide a sink or washing device for these receptacles in a central utility room on the floor of a hospital. This made it necessary to carry these filled receptacles from the room of the patient to said central utility room. This is objectionable, because it produces disagreeable odors throughout the hospital and necessitates carrying the bedpans through corridors past visitors; and the work is disagreeable.

It has also been the practice to provide a hose in the patient's bath room. The use of a hose to provide wash water for washing the excreta into the toilet bowl spatters the clothing of the nurse or orderly, as well as the floor, walls and toilet seat; and objectionable odors results from such washing.

According to my invention, I provide a combination washing device and toilet bowl which can be made and installed at minimum expense. The combined device does not require more floor space than the conventional toilet bowl. The improved combination device requires only a minor addition to the conventional plumbing, which is an important feature, in order to make it possible to make and install the device at minimum expense and without increasing the size of the toilet room.

Other objects and advantages and features of my invention are set forth in the description and drawings herein, which show two embodiments of my invention.

Fig. 1 is a front perspective view of the first embodiment. The door of the washing hopper or casing is shown in closed position.

Fig. 2 is a vertical longitudinal central section of Fig. 1, showing a urinal in washing position and releasably held at the inner face of the closed door. This embodiment shows a toilet bowl which has an S-trap said bowl being modified according to my invention.

Fig. 3 is a vertical longitudinal central section of a second embodiment, showing a bed-pan in washing position, and releasably held at the inner face of the closed door. This embodiment shows a toilet bowl which has a P-trap, said bowl being modified according to my invention.

First embodiment, Figs. 1 and 2

This has a toilet bowl **10**, whose pedestal **11** is supported on floor **12**. Bowl **10** has a rim **21**. A seat S is turnably connected to bowl **10** by hinge H. This hinge H may be connected to any part of the device.

Bowl **10** has a basin B, which has a rear overflow wall **16**. The basin B normally has a pool of water, which has a normal top level **21***a*.

The ordinary toilet bowl has a top seat opening, and an imperforate top wall which is located at the rear of said top seat opening and at the rear of the seat. If the ordinary toilet bowl is of the S-trap type, it has a single lateral partition wall **31** which is integral with the rim and side walls of the bowl. The horizontal bottom edge

of this ordinary single S-trap wall **31** is located below the horizontal level plane which is indicated by the reference numeral **21***a*. When flushing water is admitted into the ordinary S-trap bowl, said water flows over the top edge of rear wall **16** of basin B into the syphon passage **17**, whose outlet **13** extends through floor **12**. This trap-wall **31** prevents sewer gases from flowing from the sewer through the pool of water into the room.

According to my invention, I provide an additional hopper opening in the top wall of the bowl rearwardly of the usual top seat opening of the bowl, and I provide the bowl with an additional integral lateral partition wall **19**, whose horizontal bottom edge is also located below the plane **21***a*. This partition wall **19** is located rearwardly of the S-trap wall **31**. I thus provide said additional top washing opening of the bowl with a passage or conduit **22**, which is open at its top and bottom, and which is closed at its sides by the side walls of the bowl. The supplemental partition wall **19** is located forwardly of the rear wall **16** of basin B. This supplemental partition wall of trap wall **19** extends below the outlet passage or conduit **17**, and below the top of the basin part B and hence below the top of the normal pool of water in said basin part B. This supplemental trap wall **19** prevents dangerous sewer gases from backing up into the room through conduit **22** and through the hopper **23** which is to be described shortly.

When flushing water is admitted to this modified bowl, the passages or conduits **17** and **17***a* provide a siphon outlet to the waste.

The washing hopper **23** is held fixed relative to bowl **10**. Said hopper **23** has a bottom flange **24** which is fixed to the top wall of the bowl at its supplemental top opening, in order to provide a sealing connection between the interior of hopper **23** and the passage or conduit **22**. A sealing gasket or other sealing means may be used, in order to provide a liquid-tight and air-tight connection between the interior space of hopper **23** and the top wall of the bowl at the top of passage **22**.

One optional shape of hopper **23** is shown in Fig. 2.

A door **33** is turnably connected to lugs **32** of the front wall **28** of hopper **23** by a shaft **34** which is turnably mounted in said lugs **32**. Said door **33** optionally has a stop extension **33***a* which abuts the inner face of the front wall **28**, when door **33** is closed. Door **33** may have a conventional sealing gasket and it may optionally be biased to normal closed position by a spring.

A vent-pipe **29** is optionally provided in the top wall **27** of hopper **23**.

Conventional means are shown for releasably holding the bed-pan or urinal to door **33**.

Laterally spaced arms **42** are fixed to the inner face of door **33**, and additional laterally spaced arms **40** are also thus fixed. These arms **42** and **40** are perpendicular to the planar door **33**. Arms **42** are provided with lateral fingers **43** which extend laterally towards each other, and arms **40** are provided with similar fingers **41**.

Arms **42** are longer than arms **40**. The lateral spacing between arms **42** is less than the lateral spacing between arms **40**. A bed-pan **45** can thus be supported in upstanding position when door **33** is closed, as shown in Fig. 3. The urinal **46** has a hook by means of which said urinal **46** may be supported in inverted upstanding position when door **33** is closed.

Door **33** may be opened to horizontal position, and the urinal or bed-pan can then be mounted upon door **33**. The door **33** is then closed, in order to empty the contents of the receptacle into hopper **23** and through passage **22** into the bowl.

Optionally, the door **33** can be opened by depressing the pedal **37** of a lever **35** which is pivoted at **36** to

bowl **10**. The cylinder **39** of a conventional dash-pot is pivoted at **39***a* to lever **35**. The piston of cylinder **39** has a piston rod **39***b* which is pivoted at **39***c* to an arm **38** which is fixed rigidly to turnable shaft **34**. When pedal **37** is depressed below its normal position, the air or liquid in cylinder **39** is subjected to pressure, thus moving rod **39***b* upwardly, and turning door **33** to its open position. Lever **35** may be biased to a normal position, in which door **33** is closed.

As above noted, the case and economy of installation is an important feature of my invention.

Fig. 1 shows a water-supply pipe **50**. This is connected to branch or extension pipe **51** through an ordinary and normally closed flushing valve V. Said flushing valve V may be opened by manually operating the usual handle **53**.

Pipe **51** is connected to flushing pipe **51***a* and to washing pipe **52**, through a conventional two-way valve VA. This two-way valve VA can be operated by handle **54** to a washing position in which flushing pipe **51***a* is blocked from pipe **51** and washing pipe **52** is connected to pipe **51**. This two-way valve VA can be turned to another position which is the flushing position, in which washing pipe **52** is blocked from pipe **51**, and pipe **51***a* is connected to pipe **51**.

The outlet of the flushing pipe **51***a* is connected to bowl **10**, in order to supply flushing water to bowl **10** when valve V is opened and the valve VA is in the flushing position.

The washing pipe **52** is connected to any selected number of washing nozzles which are provided in the interior of the washing hopper **23**. These washing nozzles may be spray nozzles or of any type. Two washing nozzles **55** and **56** are shown as illustrations.

When it is desired to wash the receptacle, the door **33** is closed, thus emptying the receptacle by means of the bottom opening of hopper **23** and passage **22**. Valve VA is turned to the washing position. Valve V is then opened, thus supplying water to the washing nozzles, without supplying flushing water to the bowl through pipe **51***a*.

There are enough washing nozzles to thoroughly wash the interior and exterior of the receptacle and the inner walls of the hopper **23** and door **33**. The wash water flows through passage **22** into basin B and said basin is emptied by the usual siphon action.

Hence, in order to install the device in the conventional water line, it is only necessary to connect washing pipe **52** and the valve-casing of valve VA in the conduit **51—51***a*.

The pipe **50** may be connected to supply cold water. Hot water or sterilizing steam may be admitted to the hopper **23** through conduits **51** and **52** through a by-pass valve.

The vent pipe **29** may be omitted. In such case, the top wall **27** of hopper **23** is imperforate.

The pedal device may be omitted, and the door **33** may be opened and closed by hand.

The door **33** is optionally inclined rearwardly when it is closed, so that gravity can normally hold door **33** in closed position.

Second embodiment, Fig. 3

The only difference from the first embodiment is that the bowl **10***a* has a modified P-trap construction. This bowl has an outlet passage or conduit **58***a*. The ordinary P-trap bowl has a single lateral partition wall **57**.

I provide the bowl **10***a* with an additional integral lateral partition wall **58** at the rear of the supplemental opening at the top of the bowl, thus providing a passage **22***a* which has the same function as passage **22**, and which similarly prevents dangerous sewer gas from entering the room through hopper **23**. In this embodiment, the wall **58** functions as the trap wall.

In each embodiment herein, there is a combination, toilet bowl and trap. In the first and second embodiments, the trap is an internal part of the bowl. In each of the two embodiments, the hopper is connected to a supplemental inlet opening of the combination bowl and trap device, and said supplemental inlet opening is located rearwardly of the main top inlet opening of the bowl.

In the first and second embodiments, the rear wall of the bowl is located rearwardly of the respective rear depending bowl wall **19** or **58**, and the respective outlet **13** or **58***a* is located rearwardly of the rear depending wall **19** or **58**.

In the first and second embodiments, the top of each depending partition wall is at and extends downwardly from the rim of the bowl. The top of the front depending wall **31** or **57** is at the rear of the main inlet top opening of the bowl, and also at the front of the rear supplemental top opening of the bowl, so that the top of said front depending wall is the separating means between said top openings, and the top of the rear depending wall **19** or **58** is at the rear of the supplemental top rear opening.

The invention includes, as a separate feature, the improved bowl of the first and second embodiments.

It has been proposed, as in Salvoni U. S. Patent No. 2,075,830 dated April 6, 1937, to provide a combination toilet bowl and bidet. However, the construction shown in this prior patent is so expensive and impractical that it has not been put into use, due to the various expensive plumbing connections, and also because the bowl has a single depending wall at the junction between the openings, said single wall being arched at its lower end to provide two legs, which are respectively located forwardly and rearwardly of the rear wall of the basin.

Also, the construction of this prior patent permits dangerous sewer gases to enter the bidet and hence the room from the toilet discharge pipe.

The improved construction of the toilet bowl disclosed herein makes it possible to make all its parts of an integral one-piece construction at minimum cost. Also, in this prior construction, the wash water was not discharged into the pool of water which is normally maintained in a well or recess of the bowl. In the preferred embodiments disclosed herein, the wash water is discharged into said pool of water, thus causing said pool to overflow in the same manner as if flushing water is admitted into the pool. The embodiments herein all include means for preventing sewer gases from entering the room from either the hopper or the toilet bowl.

I claim:

In combination, a toilet bowl and a vertical hopper fixed to said toilet bowl, said bowl having a top seat-opening, said hopper extending upwardly from the top of said bowl and being located rearwardly of said seat-opening, said bowl having an outflow passage, said hopper having a communicating opening at its lower end which communicates with said bowl, said bowl having an integral lateral partition trap-wall which extends completely laterally across the inner wall of said bowl, said partition trap wall being at and depending from the rear of said communicating opening, said partition trap-wall being located in front of said outflow passage and extending below the entire inlet mouth of said outflow passage and being proximate to the rear wall of the bowl, said outflow passage being located above the bottom of said bowl to provide a basin-part in said bowl which is normally filled with a pool of water, said trap-wall extending below the top of said basin part to be located below the top of said pool, said partition trap wall being shaped and located to block any reverse flow of gas through said outlet passage into said hopper or out of said bowl, said hopper having holding means to hold a receptacle therein and having a door which can be moved to closed position and to open position, said

hopper having internal washing means for supplying wash water to wash said receptacle, and said combination having supply means for supplying water to said bowl and to said internal washing means.

References Cited in the file of this patent

UNITED STATES PATENTS

1,340,611	Hinsdale	May 18, 1920
1,369,283	Kelly et al.	Feb. 22, 1921
1,711,295	Wernle	Apr. 30, 1929
1,990,578	Zorraquin	Feb. 12, 1935
2,065,104	Stamberger	Dec. 22, 1936
2,075,830	Salvoni	Apr. 6, 1937

FOREIGN PATENTS

157,895	Switzerland	Jan. 2, 1933
204,793	Switzerland	Aug. 2, 1939