March 25, 1958 J. BAKKER 2,827,770

PRE-STRESSED PILE WITH RECOVERABLE REINFORCEMENT

Filed July 6, 1951 2 Sheets-Sheet 1

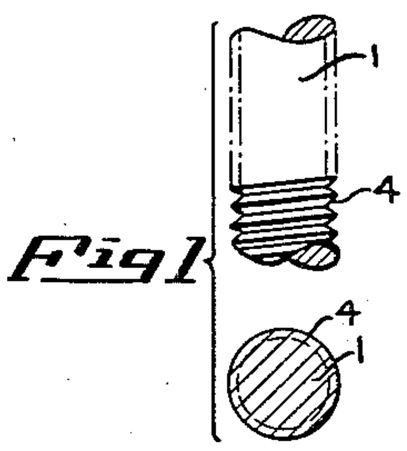

Fig 1

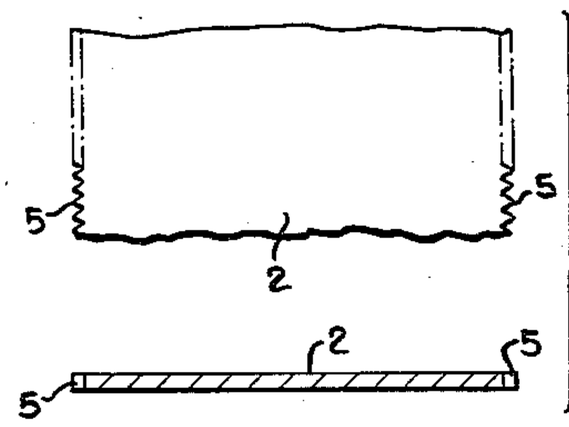

Fig 2

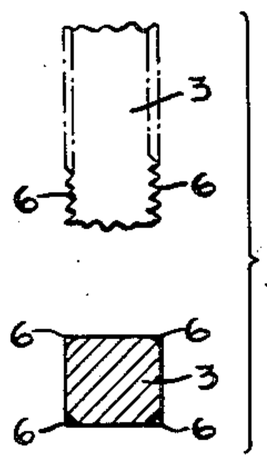

Fig 3

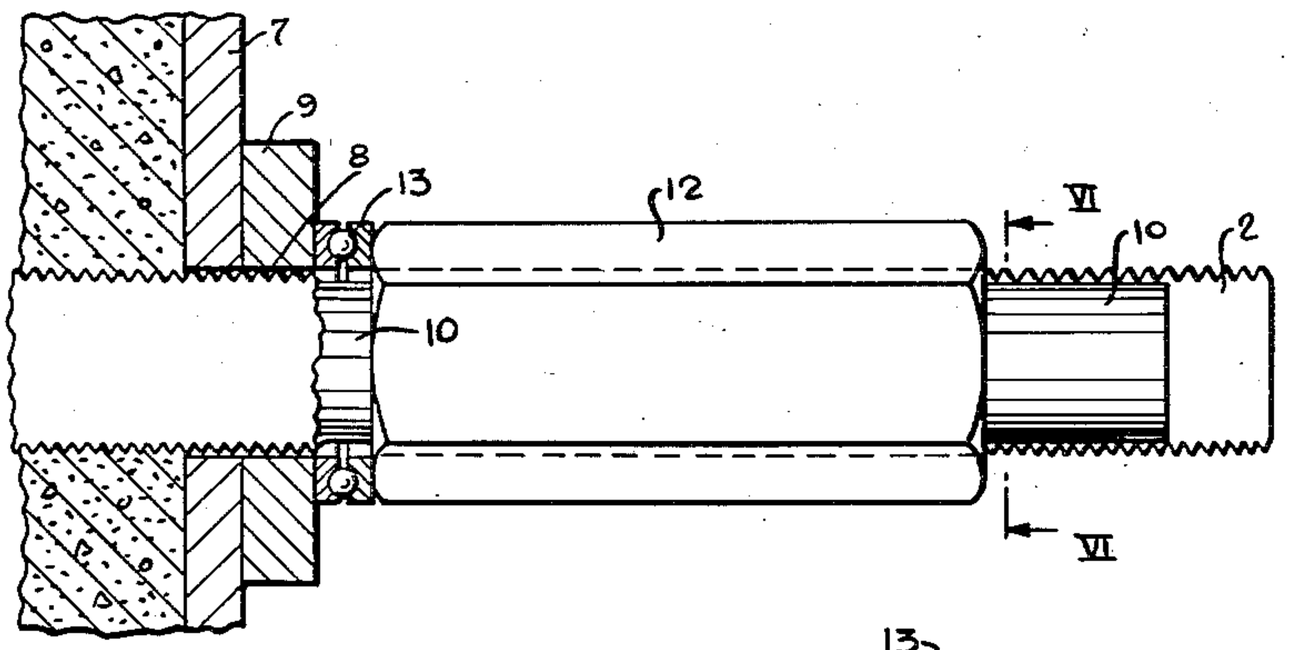

Fig 4

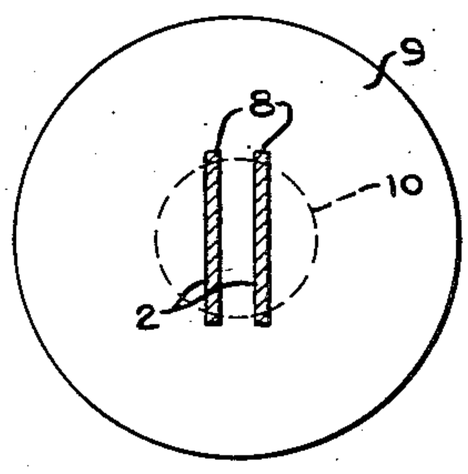

Fig 5

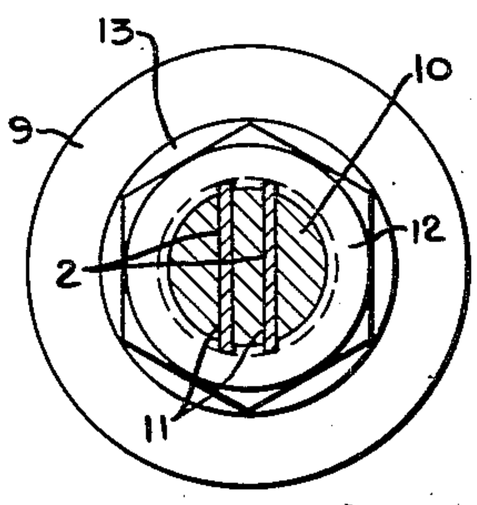

Fig 6

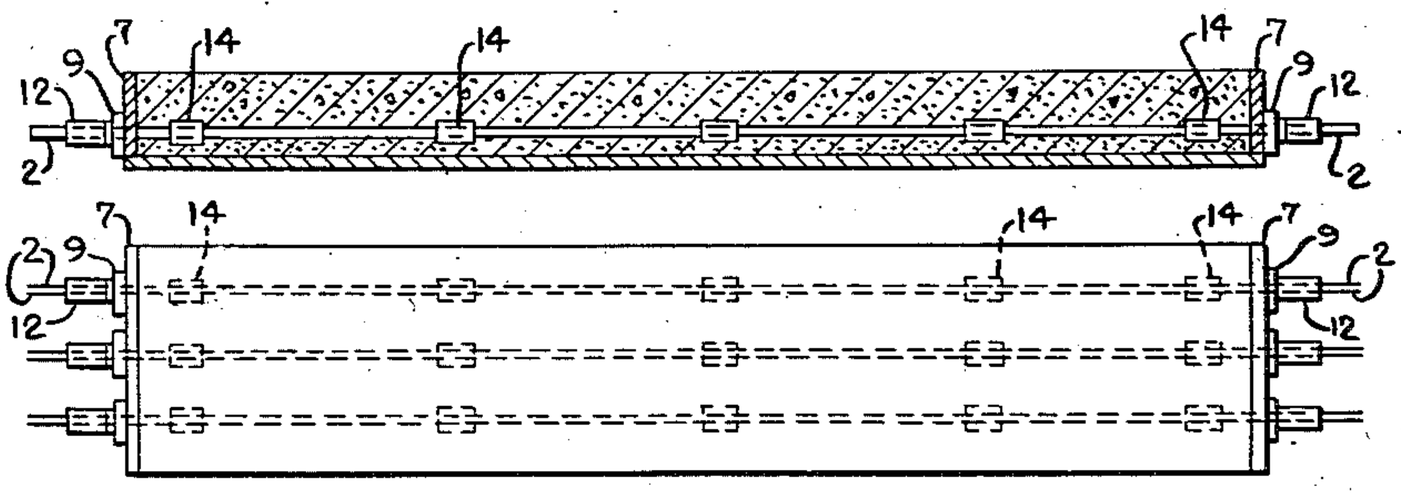

Fig 7

Fig 8

INVENTOR:
JOHANNES BAKKER,

BY

Ernest D. Marcus,

HIS AGENT.

March 25, 1958 J. BAKKER 2,827,770

PRE-STRESSED PILE WITH RECOVERABLE REINFORCEMENT

Filed July 6, 1951 2 Sheets-Sheet 2

Fig 10

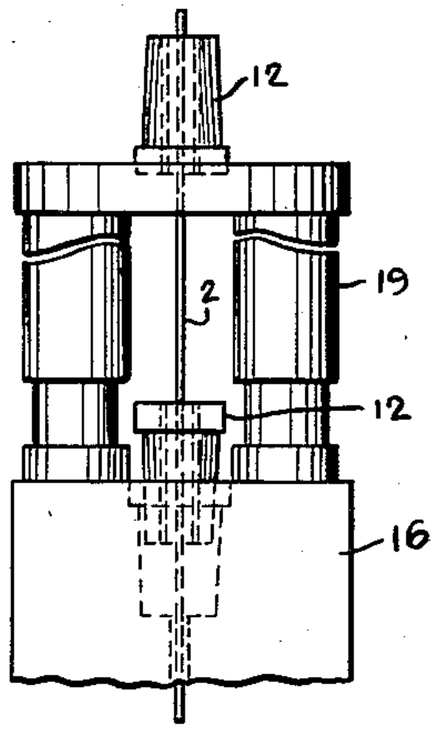

Fig 9

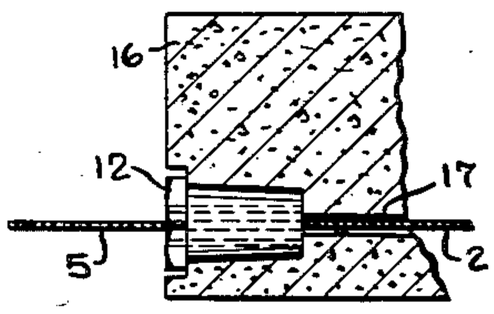

Fig 11

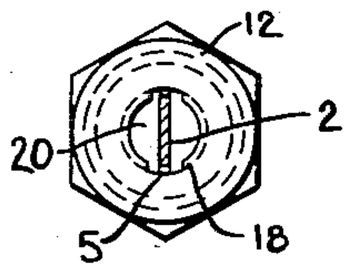

Fig 12

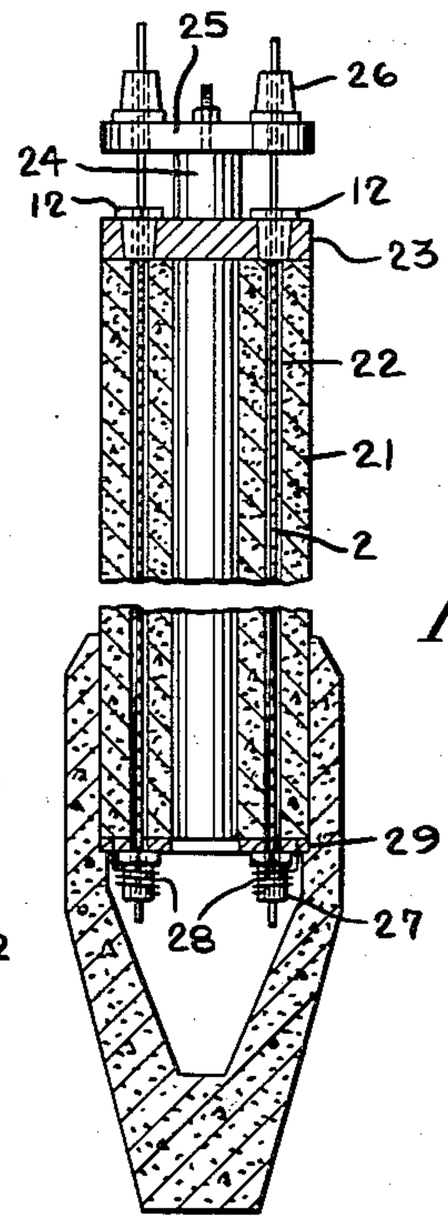

Fig 13

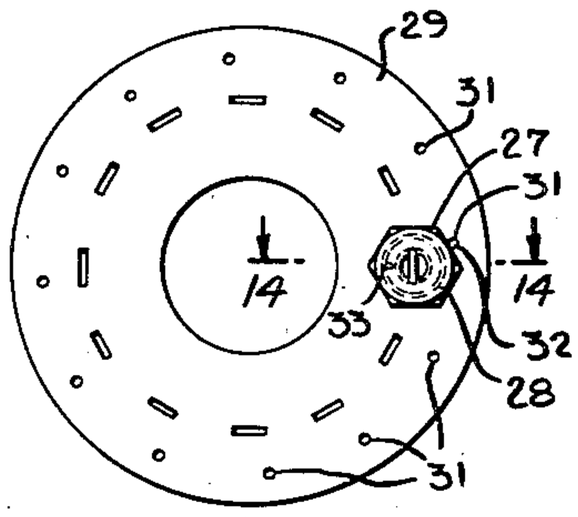

Fig 14.

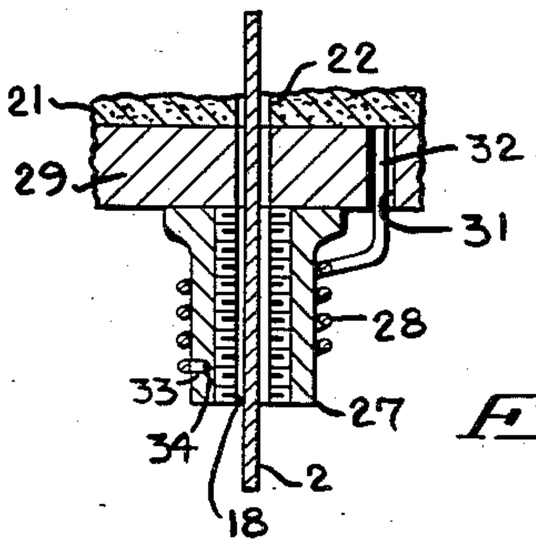

INVENTOR:
JOHANNES BAKKER,

BY

Ernest D. Marmorek,

HIS AGENT.

United States Patent Office

2,827,770

Patented Mar. 25, 1958

2,827,770

PRE-STRESSED PILE WITH RECOVERABLE REINFORCEMENT

Johannes Bakker, Lange Ruige Weide, Netherlands

Application July 6, 1951, Serial No. 235,405

Claims priority, application Netherlands January 4, 1951

3 Claims. (Cl. 61—56)

The invention relates to an armouring element for concrete, more particularly prestressed concrete.

When manufacturing prestressed concrete usually armouring elements are used with a round cross-section. Such elements can only be used in a creepfree manner without additional anchoring means up to a diameter of 4 mm. at which size the cross-sectional area is equal to the external surface area per unit of length. One of the most simple and effective additional anchoring means is to provide the armouring element or wire with a screw thread. This, however, gives a considerable reduction of the effective cross-section area and in addition sacrifices much material which becomes especially of interest when so called high grade steel is used, because the costs of high grade steel are by far greater than normal armouring steel.

The invention now aims at meeting these drawbacks to a high degree in a simple manner.

According to the invention the armouring element possesses a square or rectangular cross-section and is provided, at least at the ends, with transverse grooves in the corners or in the narrow side faces. It has been proved, that such a relatively deep local roughening of the outer surface of the armouring element in most cases can give a sufficient guarantee against creeping of the armouring, even if high prestresses are applied, while the loss of effective cross-sectional area is only small.

Preferably the transverse grooves are made in such a manner that they form parts of a screw thread. In this manner the stressing can be carried out in the same simple manner with the aid of nuts—of course of adequate length—as with round threaded armouring elements.

For facilitating and enabling a considerable speeding up of the anchoring and arrangement of intermediate anchoring members appropriately for the anchoring at the ends or at intermediate places a sleeve-shaped member is used having an internal toothing corresponding with the transverse grooves and which is interrupted throughout a certain angle at least at two diametrically opposite places. In this way the anchoring members can be slid along the armouring element in a definite angular position in which the armouring element lies in the part without toothing, and at the desired place it can be locked by turning it a quarter of a revolution. It is not necessary that the toothing of the sleeve-shaped member and of the armouring element forms a screw thread, though it is preferred.

For armouring elements with a rectangular cross-section the sleeve-shaped member can be provided with filling pieces with adequate external toothing, which filling pieces enclose the armouring element, so that it cannot be bent in transverse direction while the filling pieces also serve to enlarge the end faces when used with intermediate anchorings.

With armouring elements having transverse grooves forming parts of a screw thread the sleeve-shaped member is appropriately executed as a nut in which the screw

thread is interrupted at least at two diametrically opposite places.

The invention comprises at the same time the anchoring means to be used with an armouring element as described above, which anchoring means, according to the invention, are formed by a sleeve-shaped member, eventually formed as a nut, with a toothing or screw thread corresponding with the transverse grooves of the armouring element.

The invention at the same time comprises the process of manufacturing reinforced concrete, more particularly prestressed concrete, in which according to the invention armouring elements are used having a square or rectangular cross-section and which are provided, at least at the ends with transverse grooves in the corners or in the narrow side faces, which grooves preferably form parts of a screw thread.

Further the invention comprises the concrete articles or constructions provided with the above described armouring elements or manufactured according to the method described above, with the anchoring members belonging to it, more particularly a prestressed pile with removable armouring, in which the armouring elements are passed through channels that are wide enough so that the channel walls are spaced from the element, and are anchored at the end with an anchoring member as described above, which is turned in such a manner by means of a spring when the armouring element is released, that upon release of the stress applied the armouring element becomes loose in the anchoring member and can be pulled out from above.

It may be observed that armouring elements with a square or rectangular cross-section, more particularly a flat rectangular cross-section, are known in itself. With square wire, in addition, it is known to ameliorate the anchoring by twisting the wire in the longitudinal direction, which however, is insufficient for high stresses, as then it cannot prevent creeping. Furthermore the smooth band steel used up till now is also only creepfree as long as the outer surface area per unit of length is equal or appropriately somewhat larger than the (effective) cross-sectional area.

The invention will now be further elucidated with reference to the drawing, in which:

Fig. 1 shows for comparison a known armouring element with round cross-section, which is threaded, in side elevation and cross-section,

Fig. 2 shows a band-shaped armouring element according to the invention with rectangular cross-section in side elevation and cross-section,

Fig. 3 shows an armouring element according to the invention with square cross-section in side elevation and in cross-section,

Fig. 4 shows a stretching and guiding device for flat band-shaped armouring elements according to the invention,

Fig 5 shows an end view of the guide member,

Fig. 6 shows a cross-section according to the line VI—VI in Fig. 4 of the guide member,

Fig. 7 shows an application of the invention and,

Fig. 8 another application thereof,

Fig. 9 shows an end anchoring according to the invention,

Fig. 10 shows the stretching of an armouring element with the aid of the anchoring members,

Fig. 11 shows an anchoring member in top elevation on enlarged scale,

Fig. 12 shows a prestressed pile with removable armouring according to the invention,

Fig. 13 shows the under ring used with the pile according to Fig. 12 on enlarged scale, and

Fig. 14 is a large scale sectional view taken on line 14—14 of Fig. 13.

In the Figures 1–3 armouring elements 1, 2 and 3 respectively are shown with the same cross-sectional areas, e. g. 100 mm.^{2} which are provided with transverse grooves 4, 5 and 6 respectively of a depth of 1 mm. in the form of screw thread. The screw thread grooves have in cross-section the shape of an equilateral triangle. In Figure 1 which shows an embodiment of the prior art, the screw thread 4 is necessarily arranged all around the rod 1. In Figure 2 the screw thread 5 is only arranged in the narrow side faces of the band-shaped armouring element 2 and in Figure 3 the screw thread 6 is only cut in the corners of the square wire 3. With a cross-sectional area of 100 mm.^{2} the round wire 1 possesses a diameter of 11.3 mm. The cross-sectional dimensions of the band 2 are 50 x 2 mm. and those of the rod 3 are 10 x 10 mm. By cutting off the grooves a loss of effective cross-section arises, so that in Figure 1 a reduction of the diameter from 11.3 to 9.3 arises, whereby the effective cross-sectional area sinks from 100 mm.^{2} to 68 mm.^{2}, so that a loss arises of 32%. With the band according to Figure 2 the loss amounts: $2\times2\times1=4$ mm.^{2} and with a rod according to Fig. 3:

$$4\times1\times\frac{2}{2}=4 \text{ mm.}^2$$

therefore in both cases only 4%. The amount of iron, more particularly high grade steel, which is lost during cutting of the screws amounts with the wire according to Figure 1, to 168 mm.^{3} per cm. wire length. With the band according to Figure 2 the loss of material is 19 mm.^{3} per cm. band length. With the rod according to Figure 3 the loss of material amounts to 19 mm.^{3} per cm. rod length. It will be evident that the armouring elements according to the present invention shown in Figures 2 and 3 are considerably more favourable than that according to the prior art illustrated in Figure 1, especially if high grade steel is used. In addition, the grooves according to the invention give a quite sufficient anchoring for the practice and therefore compare favorably with the known art, especially if the grooves are arranged along the whole length, as is generally the case in practice. Only, when armouring elements according to the Figures 2 and 3 are stressed by screwing on of nuts, somewhat more surplus length must be present at the ends, as the used nuts must be considerably longer for safely transmitting the stretching forces on to the band or rods.

The Figures 4–6 show the stretching of an armouring consisting of two bands 2 with transverse grooves 5 forming parts of a screw thread in the narrow side faces. The armouring elements extend through recesses in the mould wall 7 to the outside and are there passed through stretchers consisting of a disc 9 provided with two slots 8 and to which a guide spindle 10 is joined, which is integral with the disc 9 and is provided with laterally open slots 11 corresponding with the slots 8 in the disc 9. The guide spindle 10 has a diameter which is slightly smaller than the inner diameter of the screw thread to the cut in the bands, and a nut 12 engaging with the screw thread of the bands is screwed on along the spindle with an intermediate ball bearing 13.

The cutting of the screw thread grooves into the bands can be made with the same device. Only then the nut 12 is to be replaced by a cutting nut. The cutting nut can be driven mechanically and then pulls the bands automatically through.

Fig. 7 illustrates a further application of the invention wherein internally threaded sleeves 14 are positioned on a pair of reinforcing elements 2 for locally reinforcing or locking the elements. Figs. 4–6 disclose, in greater detail, the manner in which the sleeves are applied to the spaced elements 2.

Fig. 8 illustrates the application of the anchoring

sleeves to a reinforced floor slab. In this figure, sleeves 14 have been applied to the element 2 at spaced intervals intermediate the ends to more firmly lock or bond the elements 2 to the concrete of the slab.

In all cases the stretching means can be removed afterwards and can be used again.

The same procedure can be followed with armouring elements according to Fig. 3 or with single bands or with two or more bands, one lying directly on another or mutually spaced. The bands can also be used, with the same stretching means, for composed armouring elements, having a part which is brought under pressure and a part which is brought under tensile stress. Then the compressive stress elements are made to abut against the solid portion or portions between the slots in the disc of the stretcher. The bundle of lamellae can be kept together with the aid of sleeves.

In the Figures 9–11 the numeral 16 indicates a part of a concrete article or construction with a band-shaped armouring element 2 of rectangular cross-section and with a toothing 5 forming parts of a screw thread in the narrow side faces, lying in a channel 17. The armouring element is anchored under tensile stress at the ends with the aid of a nut 12, the internal screw thread of which is interrupted at two opposite places 18, for instance cut away, so that the nut is freely displaceable along the armouring element in a position in which the armouring element lies in the screw thread recesses 18, and can be locked by turning it about a quarter of a revolution. The stretching occurs by means of a double jack 19 and two nuts 12. First the upper nut is fixed or locked, after which the jack is brought to action and the armouring element is stretched. When the required stress is reached, the lower or anchoring nut is sunk in place and is fixed or locked by turning it. Thereafter the jack can be released and the upper nut can be removed. The projecting end of the armouring element can be cut off, but can also advantageously be maintained and, for instance, be folded or rolled up and protected against corrosion with bitumen or in another manner, whereby the possibility arises to control the armouring, or to exchange it or to reinforce it if it would be necessary. If very thin band-shaped armouring elements are used, the nut can be further provided with filling pieces 20, which are treaded externally and prevent collapsing of the armouring elements in transverse direction.

The nuts may also be arranged at intermediate places of the armouring elements, as additional anchoring members, and can then be made as sleeve-shaped members with smooth outer surfaces. In this case the filling pieces can at the same time serve for enlarging the end faces. The filling pieces, however, can also be omitted without any danger, as experiments have shown, with band steel elements of a thickness of 2 mm. or more and having no extreme width.

The pile according to the Figures 12 and 13 possesses a hollow cylindrical body 21, in which, as shown in Fig. 13 a number of rectangular channels 22 are recessed through which armouring elements 2 of rectangular cross-section are passed. At the upper end of the pile the armouring elements are passed through an end plate 23, in which lie the anchoring members 12, which are again executed as nuts or sleeves with a screw thread or toothing which is interrupted at two places. On the end plate stands a jack 24 with a top plate 25, on which rest the additional anchoring members 26. At the bottom end again nuts 27 are arranged as anchoring members, but these are in addition connected to a lower ring 29 by a helical spring 28. The ring 29 is provided with axial bores 31 (Figs. 13 and 14), and one end 32 of the helical spring 28 is disposed in a bore 31. The other end 33 of the spring 28 is disposed in a radial bore 34 of the nut 27. The spring 28 is normally at rest, but will become biassed when the nut 27 is turned about its axis. The springs 28

tend to turn the nuts or anchoring members 27 in such a manner that the armouring element lies in the screw thread recess 18. At the beginning of the stretching operation these anchoring members 27 are turned out of their rest position after which they are maintained in their operative position by the stress in the armouring elements 2.

After the stretching operation has been finished, the armouring elements 2 are anchored by means of the anchoring members 12 and the jack with the additional anchoring members 25 is removed, after which the projecting armouring ends are bent down. After ramming of the pile into the ground the stressing may be released; accordingly, the anchoring members 12 are loosened again with the aid of the jack 24 and the additional anchoring members 26 and the armouring elements are released whereby at the same time the bottom anchorings 27 will turn loose and the armouring element can be pulled out. Each spring 28 tends to turn the nut 27 to which it is connected towards a position in which the nut 27 releases the thread engagement with the armouring member 2. While the member 2 is stressed, the force of the spring 28 is too weak to accomplish this, but upon stress release, the spring 28 will turn the nut 27 whereby the member 2 will be disposed in the thread recess 18 and can be lifted out of the nut 27. Then also the upper end plate 23 can be removed and the pile can eventually be filled with concrete.

Though the transverse grooves are preferably executed as parts of a screw thread, this is not necessary and also any milling of the side faces or corner edges may be used. Also it can be made deeper than 1 mm. and with another profile, e. g. a saw tooth profile, if necessary.

Having now particularly described and ascertained the nature of my said invention and in what manner the same is to be performed I declare that what I caim is:

1. A pile comprising at least one elongated concrete section, said section having a plurality of openings therein and extending from end to end thereof, temporary reinforcements positioned in said openings, said reinforcements consisting of elongated flat tensioned bands having threads on the edges at an end portion thereof, internally threaded nuts positioned on said end portions and threadedly engaging said threads, said nuts bearing against the end of said section, the internal threads on said nuts having opposed interruptions therein, said interruptions defining opposed recesses, at least some of said nuts having a helical spring thereon in enveloping relationship therewith, one end of said springs having an end fixed to the respective nut and the other end of said spring fixed to the end of said section, said spring being in a tensioned state, whereby upon release of the tension in the flat bands the tension in said springs is released and the nuts are adapted to be rotated upon said bands to a

position of registry between the opposed recesses in the interior of the nuts and the threaded edges of said bands, said position of registry permitting the release of the nuts from the bands and the subsequent removal of said bands from said section.

2. In a pre-stressable concrete block, reinforcing means comprising in combination, at least one elongated flat member of rectangular cross-section and composed of high-grade steel and extending throughout the length of said block and including end portions protruding beyond the ends of said block, each end portion having formed in spaced sections of the external surface a series of transverse grooves, and sleeves on said end portions, each sleeve having groups of internal projections matching said groove series, and said projections being operable to engage releasably said grooves, each sleeve having depressions separating the groups of said projections, and being turnable for aligning said grooved surface sections with said depressions and being in that position longitudinally movable relative to an end portion, and respectively being turnable from that position for interengaging said projections with said grooves.

3. In a pre-stressable concrete block, reinforcing means comprising in combination, at least one elongated flat member of rectangular cross-section and composed of high-grade steel and extending throughout the length of said block and including end portions protruding beyond the ends of said block, each end portion having formed in spaced sections of the external surface a series of transverse grooves, and sleeves on said end portions, each sleeve having groups of internal projections matching said groove series, and said projections being operable to engage releasably said grooves, further characterized in that all of said grooves define a single interrupted thread, and that each sleeve forms a nut having a single matching interrupted thread and being operable for releasable interengagement of the threads.

References Cited in the file of this patent

UNITED STATES PATENTS

734,349	McCabe	July 21, 1903
761,287	Cummings	May 31, 1904
1,301,958	Mendenhall	Apr. 29, 1919
1,342,319	Anderson	June 1, 1920
1,949,618	Mollberg	Mar. 6, 1934
2,374,690	Laue	May 1, 1945

FOREIGN PATENTS

642,951	Germany	Mar. 22, 1937
559,314	Great Britain	Feb. 14, 1944
900,581	France	Oct. 9, 1944
903,317	France	Jan. 10, 1945
931,723	France	Nov. 3, 1947
273,004	Switzerland	Apr. 16, 1951