Nov. 12, 1957 J. A. BUNGAY 2,812,699

APPARATUS FOR DEVELOPING SENSITISED MATERIAL BY GASES OR VAPOURS

Filed Feb. 24, 1954 3 Sheets-Sheet 1

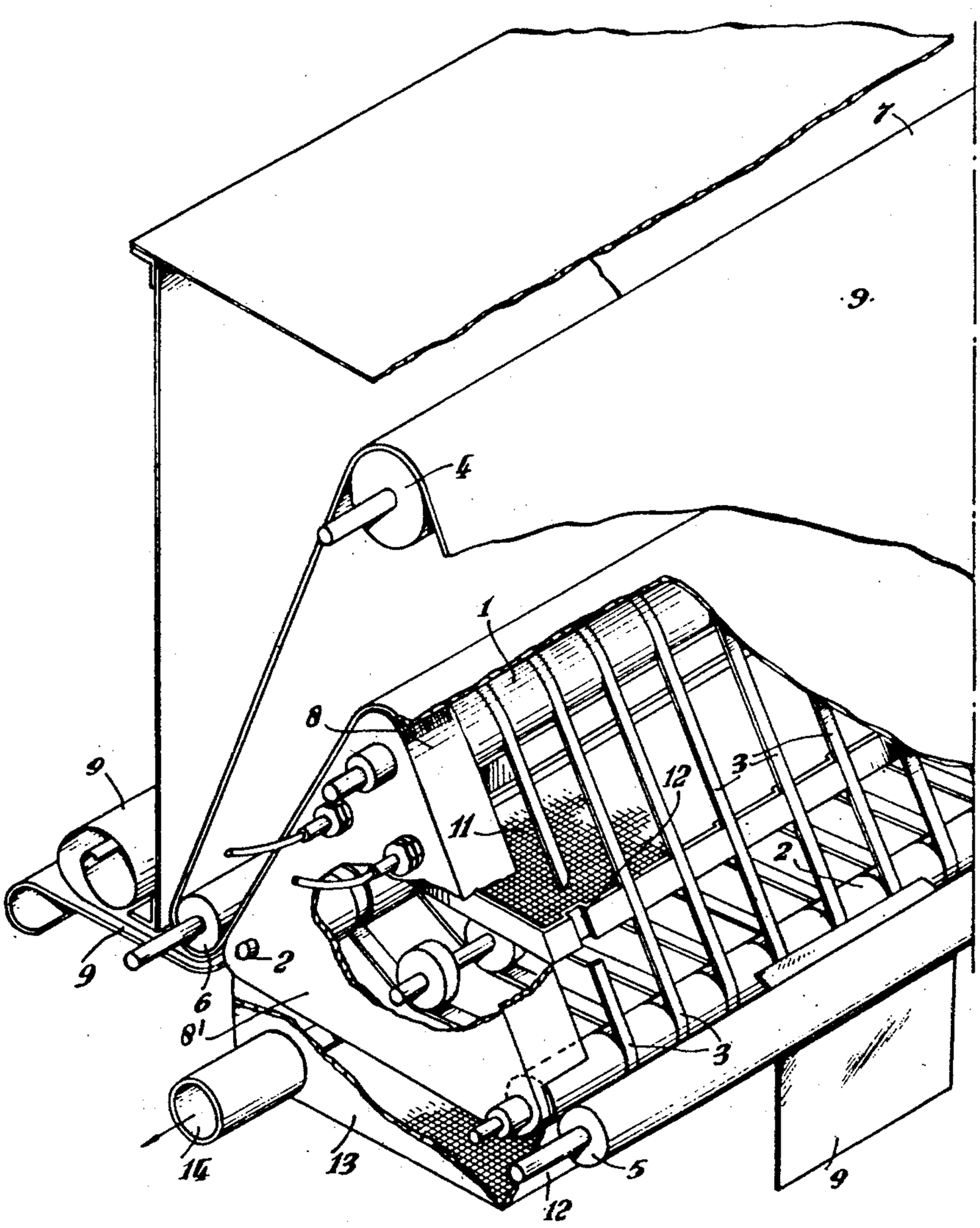

Fig. 1.

Inventor:
Jeffery Arthur Bungay
by Robert Henderson
attorney

Nov. 12, 1957 J. A. BUNGAY 2,812,699

APPARATUS FOR DEVELOPING SENSITISED MATERIAL BY GASES OR VAPOURS

Filed Feb. 24, 1954 3 Sheets-Sheet 2

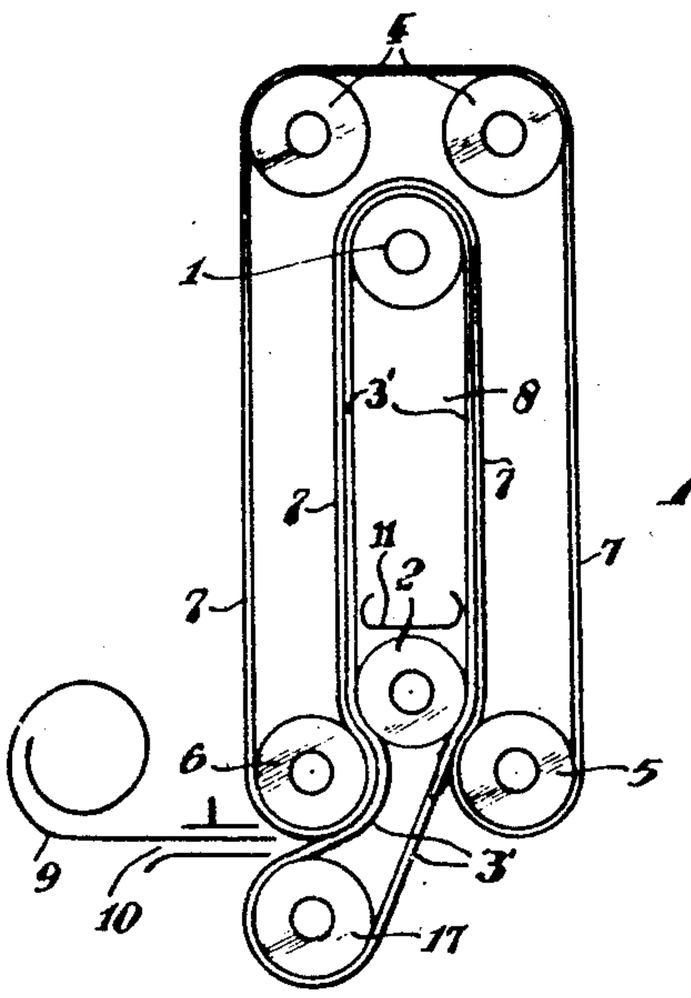

Fig. 2.

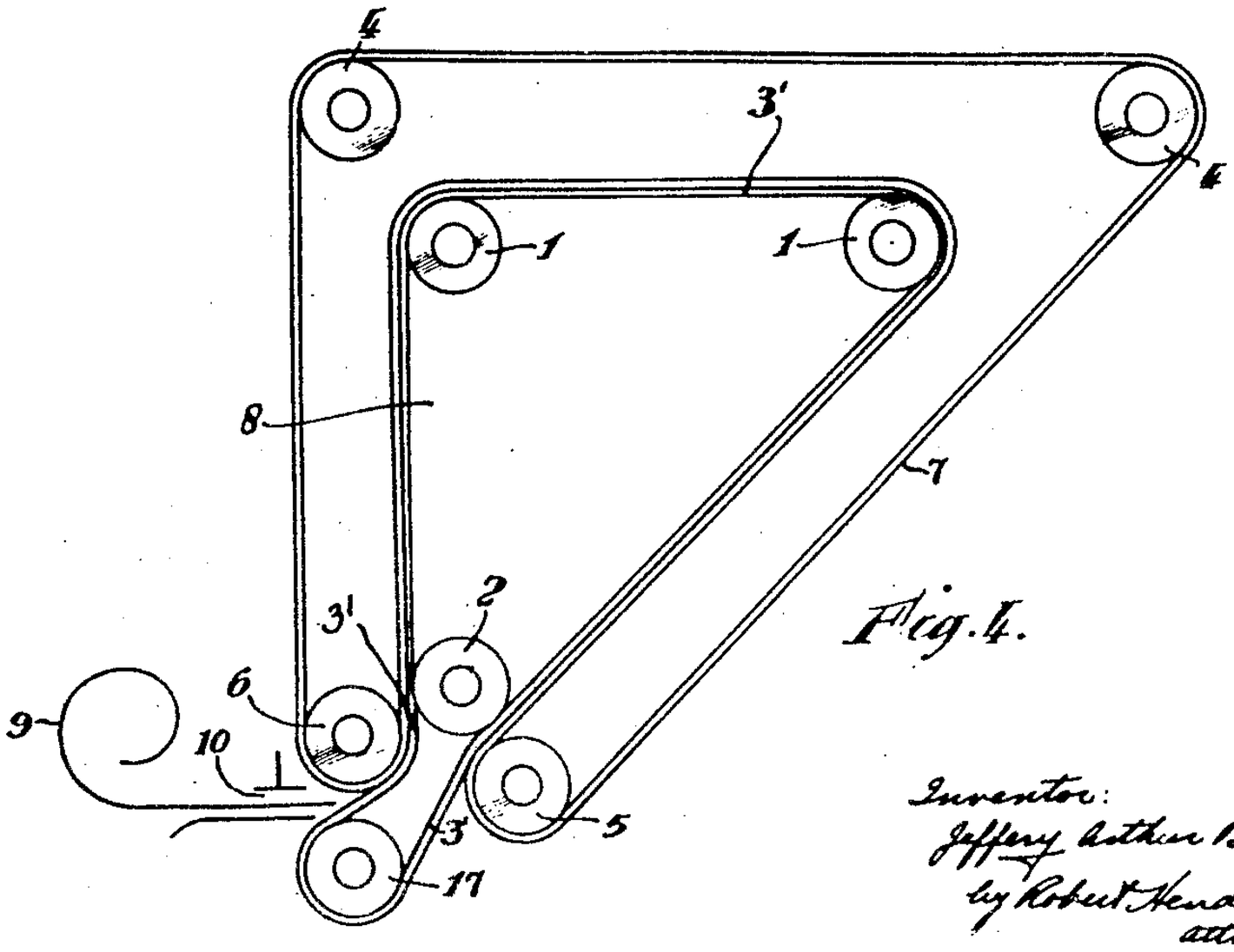

Fig. 4.

Inventor:
Jeffery Arthur Bungay
by Robert Henderson
attorney

Nov. 12, 1957 J. A. BUNGAY 2,812,699

APPARATUS FOR DEVELOPING SENSITISED MATERIAL BY GASES OR VAPOURS

Filed Feb. 24, 1954 3 Sheets-Sheet 3

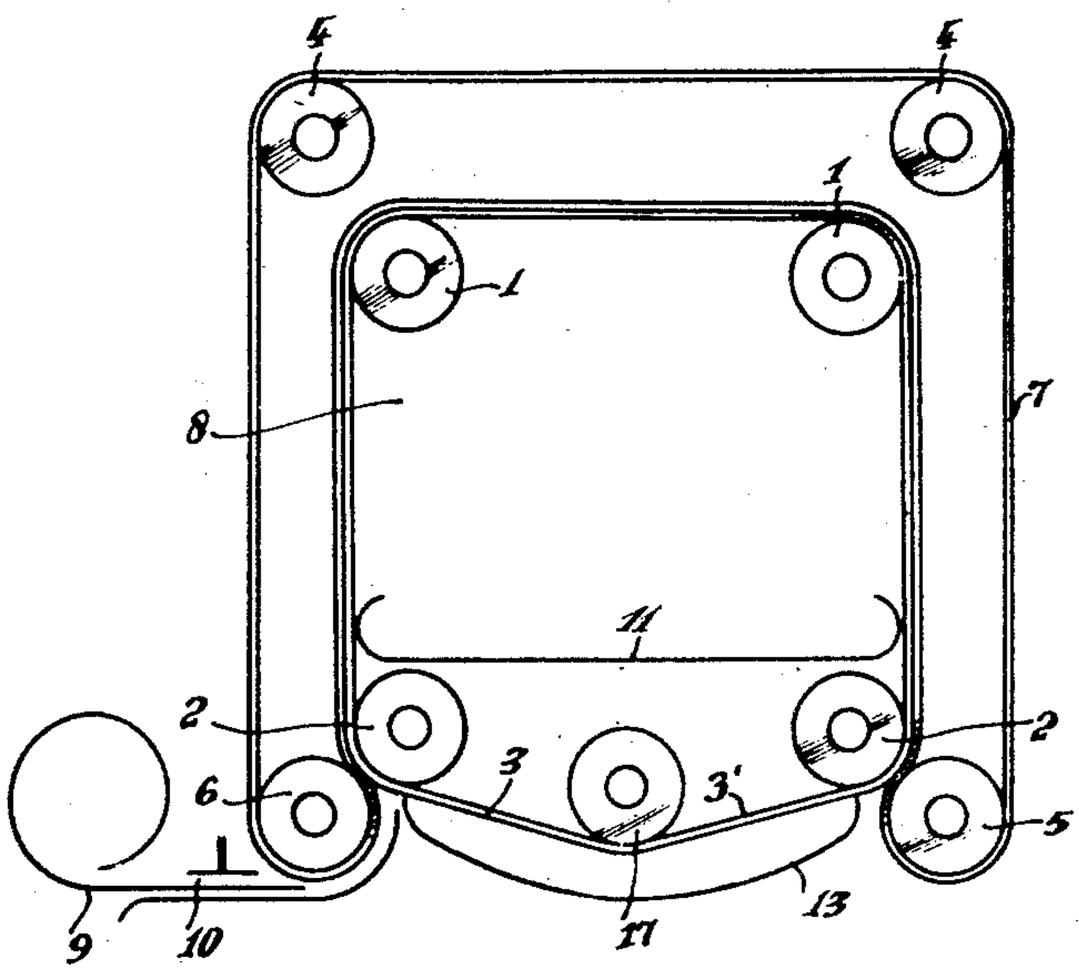

Fig. 3.

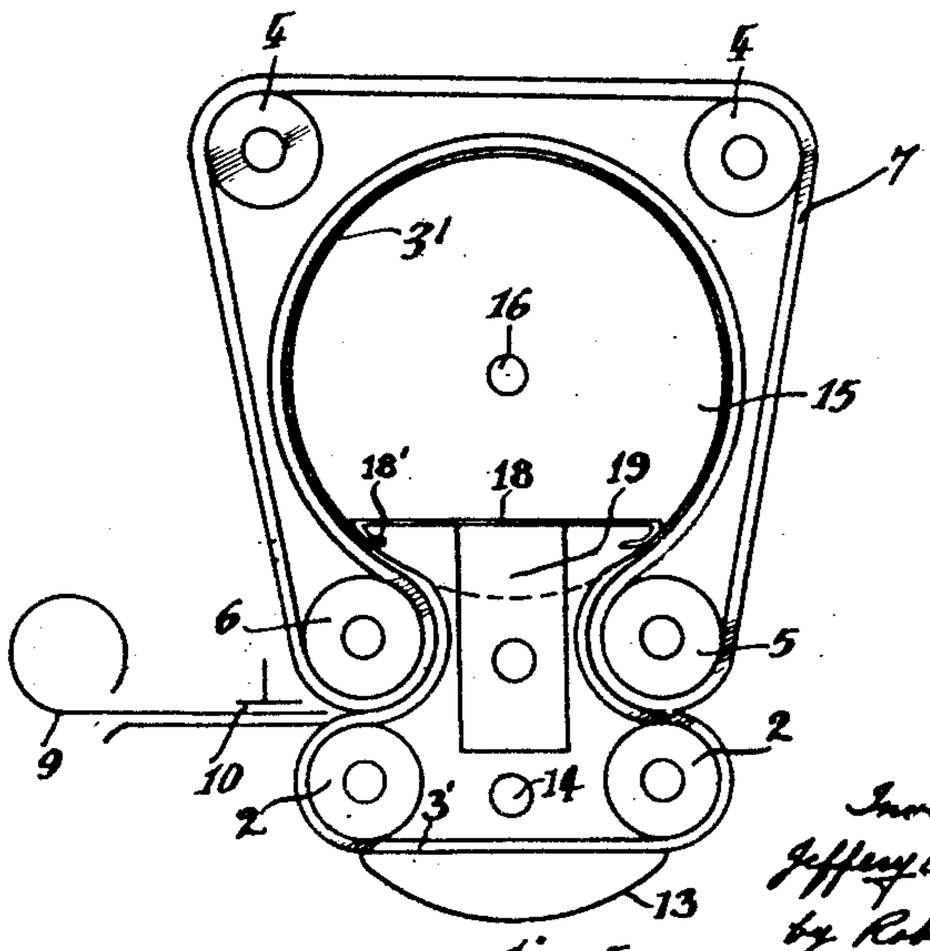

Fig. 5.

Inventor:
Jeffery Arthur Bungay
by Robert Henderson
Attorney

United States Patent Office

2,812,699

Patented Nov. 12, 1957

2,812,699

APPARATUS FOR DEVELOPING SENSITISED MATERIAL BY GASES OR VAPOURS

Jeffery Arthur Bungay, Harrow, England, assignor to Hall Harding Limited, London, England, a British company

Application February 24, 1954, Serial No. 412,200

Claims priority, application Great Britain February 27, 1953

9 Claims. (Cl. 95—94)

This invention relates to improvements in apparatus, for developing sensitised photographic material by the application of developing gases or vapours, of the kind wherein the material to be developed is carried between an endless gas imprevious belt and an endless gas passable material supporting belt and is exposed to developing gases in a gas contact area of a gas chamber (such as the well-known ammonia gas process).

Several types of such apparatus are known but they all embody metal tanks having a perforated or apertured surface over which the sensitised material is passed.

In such apparatus it is essential to provide means of conveying sensitised material such as are normally used in the reproduction of engineering and architectural drawings, through an atmosphere of ammonia vapour for the purpose of development whilst at the same time providing an enclosed cavity or gas chamber which is to confine the ammonia vapours and so far as possible prevent spreading into the room in which the apparatus is installed. Hitherto the gas chamber has been constituted by a metal tank which is closed on all sides except for one face having perforations to allow the gas to reach and develop sensitised material moved over said face hereinafter referred to as the vapour contact area.

The use of a perforated surface has two disadvantages. Firstly the metal between the perforations obstructs the free flow of developing vapours or gases and secondly obstructs the passage of heat so that the vapours which pass through the perforations may be wholly or partially condensed and thereby the material becomes unevenly developed or parts may even not be developed at all.

The maximum speed at which layers may be developed on apparatus as described is very considerably accelerated by applying heat to the ammonia. This practice unfortunately has resulted in the ammonia vapour condensing on the sides of the metal tank and increase the risk of condensation taking place in the vapour contact area as already explained. To alleviate this fault additional heating of the tank sides above the vapour temperature has been provided. The balance of heating required to obtain maximum development without condensation is extremely difficult to maintain in practice.

One of the objects of this invention is to provide an apparatus giving improved development without the disadvantage of the vapours condensing in undesired localities.

Another object of my present invention is to provide apparatus, for developing sensitised photographic material by the application of developing gases or vapours, of the kind wherein the material to be developed is carried between an endless gas impervious belt and an endless gas passable material supporting belt and is exposed to developing gases in a gas contact area of a gas chamber without the interposition of a metallic supporting guide in the gas contact area between the gas passable belt and the source of developing gases, on which condensation can take place to produce uneven development.

Another object of my invention resides in the enclosing walls of the gas chamber being comprised by the operative association of a loop of gas impervious belt defining the gas contact area, a gas impervious base and two gas impervious end members, and in having a loop of gas passable belt within said loop of gas impervious belt and said gas impervious base within the continuous gas passable belt. In this way I reduce the area of the enclosing walls of the gas chamber not acting as a gas contact area. A smaller gas chamber than hitherto used may thus be utilized.

A still further object of my invention resides in providing an apparatus wherein said gas impervious base comprises a vaporizing tray to simplify the construction and reduce the number of parts.

An even further object of my invention resides in providing an apparatus wherein the enclosing walls of the gas chamber are comprised by the operative association of a loop of gas impervious belt defining the gas contact area, a roller around which both sides of said loop of gas impervious belt pass, and two gas impervious end members; in such an apparatus a further object of my invention resides in said gas passable belt passing over said roller, to still further reduce the area of the enclosing walls not acting as a gas contact area.

An object of my invention resides in providing an apparatus wherein the gas impervious base comprises a vaporizing tray and a roller around which both sides of said loop of gas impervious belt pass to provide an additional vapour seal. In such an apparatus a still further object resides in providing means for withdrawing gas from between said vaporizing tray and said roller to prevent such gas from escaping into the atmosphere.

A further object of my invention resides in providing an apparatus of the above kind, wherein said gas impervious base is located at the mouth of said loop of gas impervious belt, and further gas retaining means are provided within said loop of gas impervious belt, a loop of gas passable belt being within said loop of gas impervious belt and said gas impervious base and gas retaining means being within the continuous gas passable belt to provide an additional vapour seal and reduce the area of the walls of the gas chamber not acting as a gas contact area. In such an apparatus, a still further object resides in providing means for withdrawing gas from between said gas impervious base and said gas retaining means to prevent such gas escaping into the atmosphere.

These and other objects of my invention will be apparent from a perusal of the specification when taken in connection with the accompanying drawings, wherein:

Fig. 1 is a perspective view partly in section, of one form of apparatus made in accordance with the present invention.

Fig. 2 is a diagrammatic sectional end elevation of a modified form of apparatus and

Figs. 3, 4 and 5 are similar diagrammatic views of further modified forms.

In the form illustrated in Fig. 1 a top roller 1 and two lower rollers 2 support a series of narrow flexible endless gas passable belts 3. These narrow gas passable belts may be substituted by an open mesh wide flexible belt or even a porous flexible fabric belt. Rollers 4, 5 and 6 support an endless flexible rubberlike conveyor belt 7 which is gas impervious, mounted to wrap over and seal on the sloping flanges 8 of the hollow ends 8' in which the rollers 1 and 2 are supported. The loop in the conveyor belt 7 is formed between the rollers 5 and 6 the top of the loop being supported on the roller 1. When this assembly is driven by rotation of the rollers 4, 5 and 6 sensitised material 9 fed into feeding slot 10 passes between the rubberlike band 7 and the narrow belts 3 and is traversed around the space partly enclosed by the

ends 8' with flanges 8 and the two runs of the conveyor belt 7 which extend on each side of the roller 1. A tray 11 is provided the two long edges of the tray 11 being formed with slots 12 to admit the narrow belts 3 and bear against the rubberlike wide outer endless belt 7 to close the bottom of the gas chamber and minimise leakage of ammonia vapour downwards. The vapour contact area is the open space above the tray 11 on each side of the roller 1 which is enclosed and sealed by the conveyor belt 7 and the flanges 8 of the ends 8'. Inside this enclosed gas chamber thus formed by the tray 11 and conveyor belt 7 liquid ammonia is adapted to be evaporated in the tray 11. The sensitised material after being carried through the vapour contact area finally emerges at 12 from between the nip formed by the narrow belts 3 and rubberlike belt 7. An undershield 13 is provided to fit under the assembly and bear on the underside of rollers 2 to further seal against escape of ammonia vapour. The space between the undershield 13 and the tray 11 is not to be regarded as a true vapour contact area and may be exhausted by a fan sucking from duct 14.

In the modified form shown diagrammatically in Fig. 2 only two rollers are provided for the narrow belts 3 or chain mail or other form of porous vapour passable supporting belt, the bottom roller 2 serving to close the bottom of the gas chamber in place of the undershield 13. An additional tensioning roller 17 is provided for the belts 3. The loop of the conveyor belt is formed as in the previous example over the roller 1.

In the next modified form shown in Fig. 3 the vapour contact area is extended to include three of the sides of the four sided gas chamber there being two top rollers 1. A tray 11 and undershield 13 are shown sealing against the belt 3.

In another modified form shown in Fig. 4 a triangulated form of gas chamber is again used but in this case the apex is at the lowest point. Again as in Fig. 2 a bottom roller 2 serves as an additional seal in place of the undershield 13. The tray is not shown as it could be of any form.

Turning now to the modified form shown in Fig. 5 this has several novel features. Instead of having a number of narrow belts 3 there is provided a single broad chain mail or other form of porous supporting belt 3' and instead of supporting this broad belt on a roller or rollers 1 extending from side to side of the machine each end 8' supports a single narrow pulley 15 on an axle 16 on which the two borders of the belt 3' are adapted to be supported the said belt 3' being made so as to have sufficient stiffness not to require any additional intermediate support between the ends 8'. In this case the seal at the ends is made between the conveyor belt 7 and the pulleys 15 or as before flanges 8 may still be provided. It is of course to be understood that the broad belt 3' may be used in any of the preceding constructions to replace the narrow belts 3 provided the obvious modifications are made to the rollers, trays etc.

In all forms the basic principle is the same, namely that the gas chamber is formed by a loop in the conveyor belt 7, in the vapour contact area there is only the supporting belt or belts between the material and the source of vapour and that there are no metal walls other than the end members on which the gases can condense and therefore the problem of condensation taking place is largely if not entirely eliminated. Furthermore, the supporting belt does not run in frictional contact with any stationary supporting surface in the vapour contact area other than the end flanges if a broad belt 3' is used.

What I claim and desire to secure by Letters Patent is:

1. Apparatus, for developing sensitised photographic material by the application of developing gases or vapours, of the kind wherein the material to be developed is carried between an endless gas impervious belt and an endless gas passable material supporting belt and is exposed

to developing gases in a gas contact area of a gas chamber also having a gas impervious area, characterized in that the enclosing walls of the gas chamber are comprised of an open loop of the gas impervious belt defining the gas contact area, and of a gas impervious base substantially closing the opening of the loop of the belt and two gas impervious end members defining the gas impervious area, in that a loop of said gas passable belt is within said loop of the gas impervious belt, in that said gas impervious base is within the continuous gas passable belt, and in that said loop of the gas impervious belt presses against said gas impervious end members to confine the developing gases to the gas chamber, the gas contact area being considerably larger than the gas impervious area.

2. Apparatus according to claim 1, wherein the said gas impervious base comprises a vaporizing tray.

3. Apparatus, for developing sensitized photographic material by the application of developing gases or vapours, of the kind wherein the material to be developed is carried between an endless gas impervious belt and an endless gas passable material supporting belt and is exposed to developing gases in a gas contact area of a gas chamber also having a gas impervious area, characterized in that the enclosing walls of the gas chamber are comprised of an open loop of the gas impervious belt defining the gas contact area, and of a roller around which both sides of said loop of gas impervious belt pass substantially closing the opening of the loop of the belt and two gas impervious end members defining the gas impervious area, in that a loop of said gas passable belt is within said loop of the gas impervious belt, in that said roller is within the continuous gas passable belt, and in that said loop of the gas impervious belt presses against said gas impervious end members to confine the developing gases to the gas chamber, the gas contact area being considerably larger than the gas impervious area.

4. Apparatus according to claim 3, wherein said gas passable belt also passes over said roller.

5. Apparatus, for developing sensitized photographic material by the application of developing gases or vapours, of the kind wherein the material to be developed is carried between an endless gas impervious belt and an endless gas passable material supporting belt and is exposed to developing gases in a gas contact area of a gas chamber also having a gas impervious area, characterized in that the enclosing walls of the gas chamber are comprised of an open loop of the gas impervious belt defining the gas contact area, a gas impervious base comprising a vaporizing tray, a roller around which both sides of said loop of the gas impervious belt pass substantially closing the opening of the loop of the belt and two gas impervious end members, said base with said roller and said end members defining the gas impervious area, in that a loop of said gas passable belt is within said loop of the gas impervious belt, in that said gas impervious base is within the continuous gas passable belt, and in that said loop of the gas impervious belt presses against said gas impervious end members to confine the developing gases to the gas chamber, the gas contact area being considerably larger than the gas impervious area.

6. Apparatus according to claim 5, wherein means are provided for withdrawing gas from between said vaporizing tray and said roller.

7. Apparatus according to claim 5, wherein said gas passable belt also passes over said roller.

8. Apparatus, for developing sensitised photographic material by the application of developing gases or vapours, of the kind wherein the material to be developed is carried between an endless gas impervious belt and an endless gas passable material supporting belt and is exposed to developing gases in a gas contact area of a gas chamber also having a gas impervious area, characterized in that the enclosing walls of the gas chamber are comprised of an open loop of the gas impervious belt defining the gas

contact area, and of a gas impervious base substantially closing the opening of the loop of the belt and two gas impervious end members defining the gas impervious area, in that said gas impervious base is located at the mouth of said loop of the gas impervious belt, and in that further gas retaining means are provided within said loop of the gas impervious belt; a loop of the gas passable belt being within said loop of the gas impervious belt, said gas impervious base and gas retaining means being within the continuous gas passable belt, and in that said loop of the gas impervious belt presses against said gas impervious end members to confine the developing gases to the gas chamber, the gas contact area being considerably larger than the gas impervious area.

9. Apparatus according to claim 8, wherein means are provided for withdrawing gas from between said gas impervious base and said gas retaining means.

References Cited in the file of this patent

UNITED STATES PATENTS

1,077,464	Everett et al.	Nov. 4, 1913
1,234,410	Stromberg	July 24, 1917
1,669,066	Murck	May 8, 1928
1,759,484	Langsner	May 20, 1930
1,820,280	Langsner	Aug. 25, 1931
2,524,818	McHugh	Oct. 10, 1950
2,589,748	Trump	Mar. 18, 1952

FOREIGN PATENTS

707,177	France	Apr. 13, 1931
702,792	Great Britain	Jan. 20, 1954