Nov. 12, 1957 E. F. FEDORYSZYN 2,812,680

MUSIC BOX

Filed Sept. 27, 1954 2 Sheets-Sheet 1

Fig. 1.

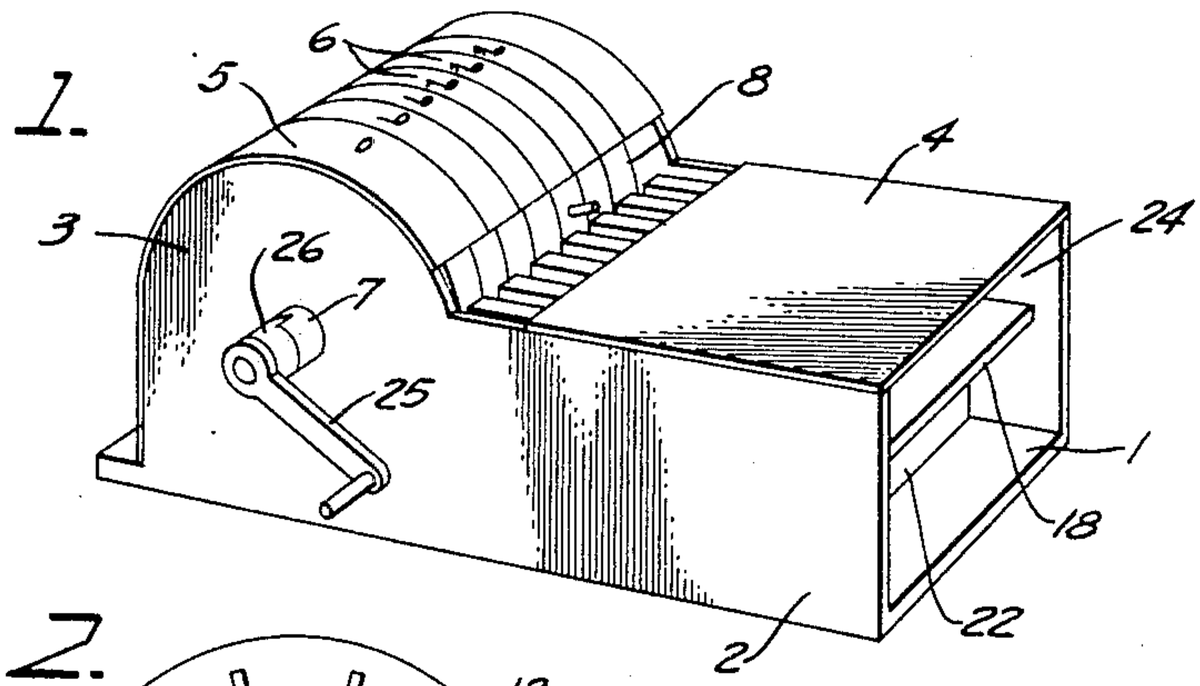


Fig. 2.

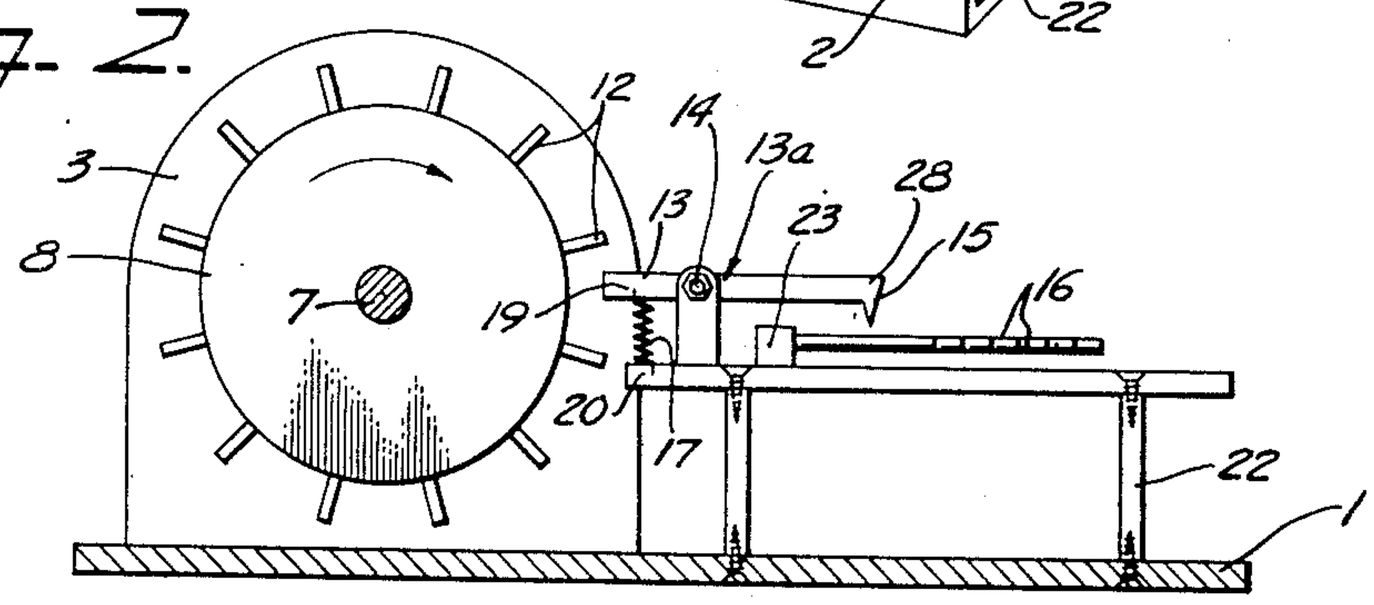


Fig. 3.

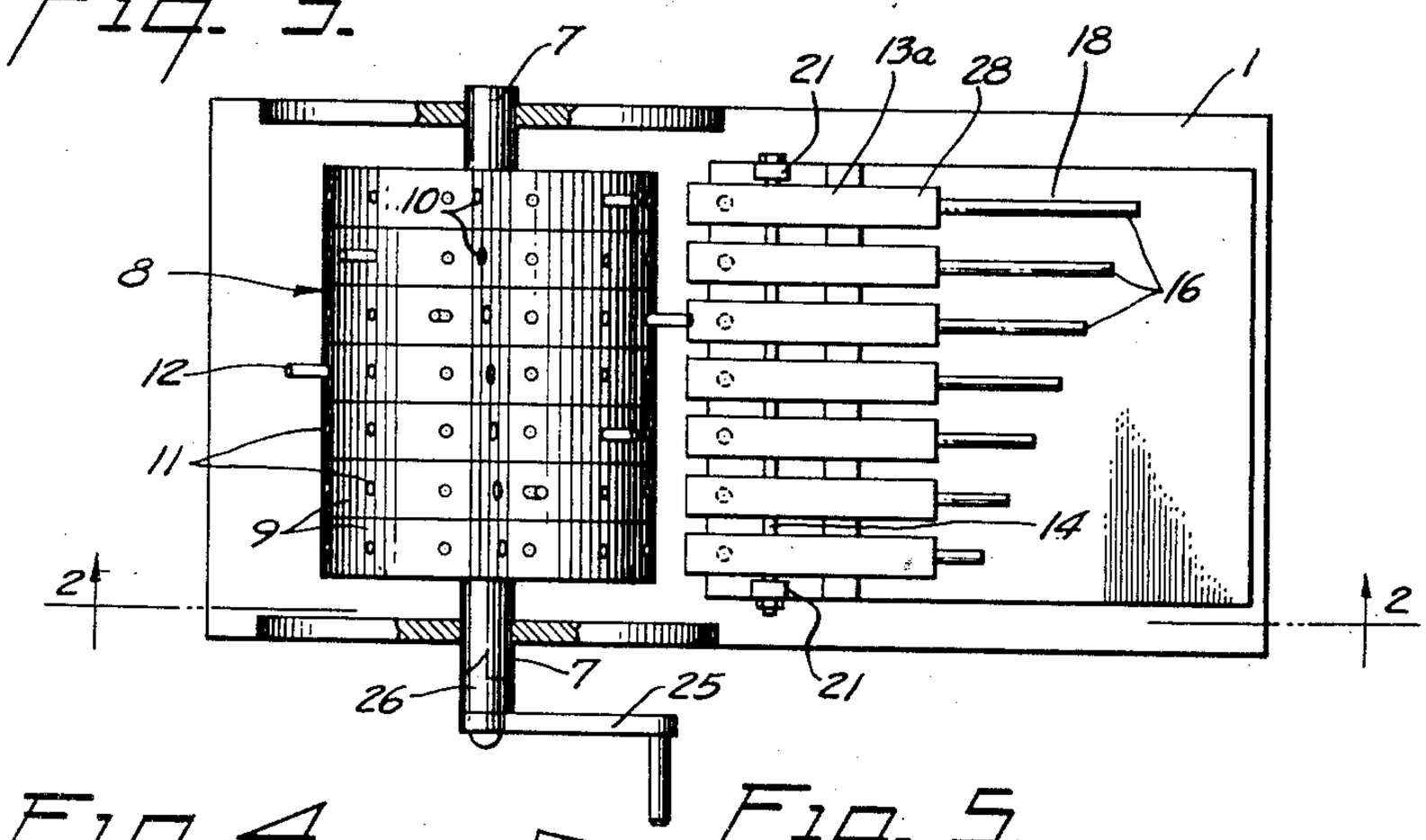


Fig. 4.

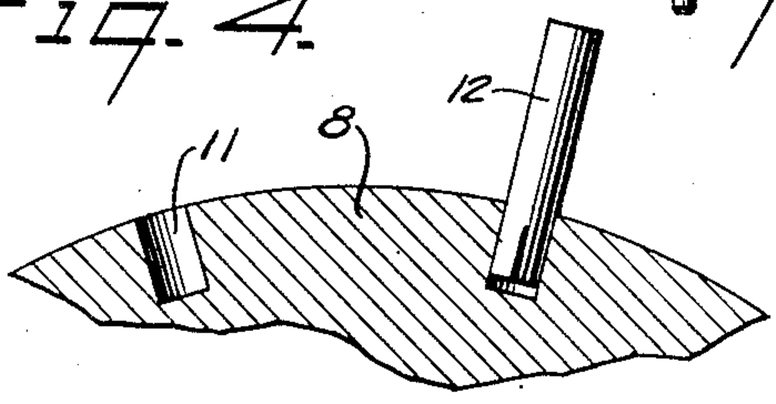


Fig. 5.

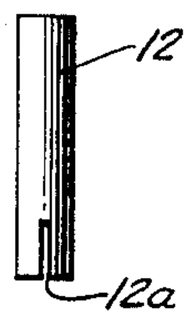


INVENTOR.
EDWARD F. FEDORYSZYN
BY
F. R. Jenkins
ATTORNEY.

Nov. 12, 1957 E. F. FEDORYSZYN 2,812,680

MUSIC BOX

Filed Sept. 27, 1954 2 Sheets-Sheet 2

Fig. 6.

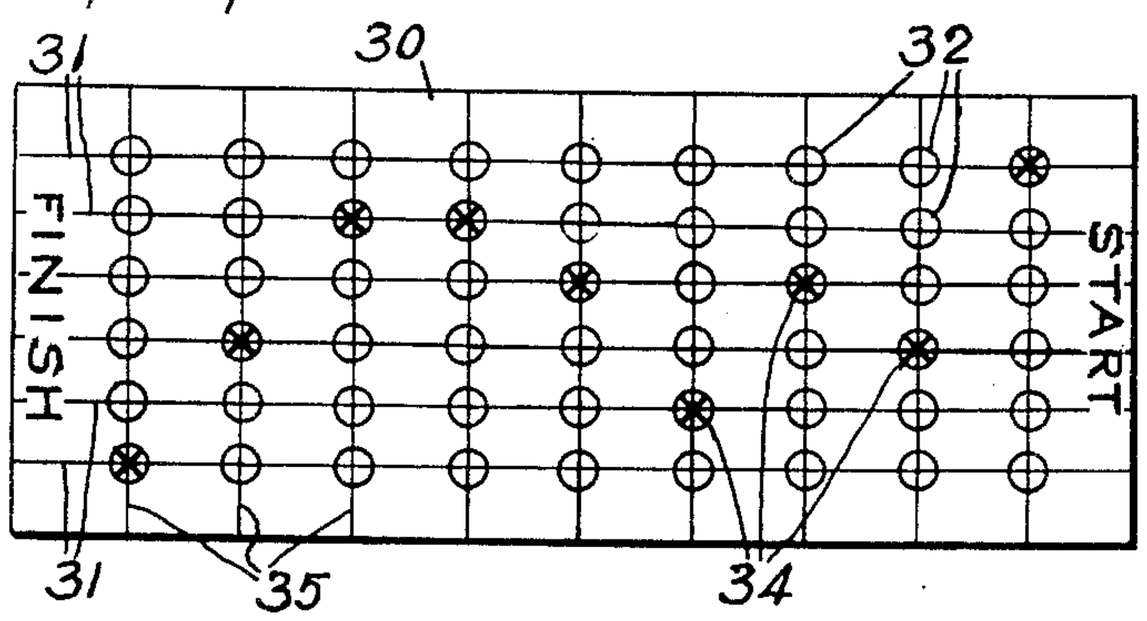


INVENTOR.
Edward F. Fedoryszyn,
BY
J. R. Jenkins
ATTORNEY.

United States Patent Office

2,812,680

Patented Nov. 12, 1957



2,812,680

# MUSIC BOX

Edward F. Fedoryszyn, Massapequa, N. Y.

Application September 27, 1954, Serial No. 458,378

1 Claim. (Cl. 84—102)

This invention relates to music boxes and more in particular to music boxes of which the tunes may be varied and which may be built or decorated in such a manner as to enable a child to learn some of the fundamentals of music both as to tones and music writing.

I am aware of the fact that the standard music boxes on the market today are limited in their performance. Most of them can only play one tune. This is because the manufacturers have permanently fixed the positions of the pins on the drum. These pins strike the vibrating reeds in a predetermined sequence and this action produces the melody or tune.

A few present-day music boxes can play two tunes. This is possible because the drum has two sets of permanently-fixed pins. Each set uses only one-half of the circumference of the drum. One complete turn of the drum will allow both sets of pins to strike the vibrating reeds, producing two separate melodies, first one and the the other.

I am aware that music boxes have been built so as to enable changes of tune, but, for the most part at least, the boxes of the prior art have been exceedingly complicated and are not satisfactory for operation and changing by a child.

Consequently, an object of this invention is to provide an extremely simple device of this character which will be suitable for entertainment and education, especially of children.

Another object of the invention is to provide an improved music box of substantially unlimited performance by which any number of tunes can be played and which will enable the operator to formulate original melodies for the music box or to cause it to play a previously composed tune by reference to translation chart.

The features for obtaining these objects are shown herein in connection with a music box having removable and engagement members mounted on the drum of the box and which may be selectively mounted in certain definite positions on the drum. The respective positions may be indicated by a tune chart for a particular tune.

In the accompanying drawing showing, by way of example, one of many possible embodiments of the invention,

Fig. 1 is a perspective of the music box;

Fig. 2 is a sectional side view of the interior of the music box the section being taken substantially along the line 2—2 of Fig. 3 looking in the direction of the arrow of said line;

Fig. 3 is a plan view of the interior of the music box certain parts having been removed;

Figs. 4 and 5 show details of construction, and

Fig. 6 is a plan of the tune chart.

The invention comprises a base **1**, side members **2**, having arcuate portions **3** at one end thereof and a top **4** forming a music rest at the other end portion. The arcuate portions may be provided with a somewhat semi-cylindrical removable cover **5**, bearing musical legends **6** if desired.



Bearingly mounted on the arcuate portions is a transverse rotary shaft **7** carrying a long drum **8** fast to the shaft and divided longitudinally by color bands into sections **9**, each representing a note of the musical scale which may be indicated by musical legends **10** thereon. Equally spaced about the periphery of the drum and in each section are a plurality of substantially radial holes **11** into which are removably disposed, in predetermined relationships, a number of pegs **12**, having longitudinal slots **12***a*, so that the pegs may be made substantially fast in the selected holes though they be inserted to varying depths thereby varying the effective distance of projection from the drum or axis thereof. The pegs are preferably of slightly resilient material, wood being suitable, to afford a frictional fit in the holes.

As the drum is rotated, the respective pegs move down on and cam against respective keys or engagement arms **13** of levers **13***a* pivoted at their mid-portions on a common rod **14** so as to depress the keys. Depression of the keys lifts depending hammers **15** on the other ends of the levers until the pegs clear the keys, thereby causing the hammers **15** to strike reeds **16** of varying length and tone mounted beneath the hammers. The force with which the hammer strikes the reed is dependent on the force imparted to the lever by a spring **17** which becomes compressed between its support board **18** and the key **13**.

The spring **17** is of the helical type having terminals **19** and **20** secured to the key and support respectively. Normally, the tensive force of the spring holds the hammer **15** away from the reed **16** so as to allow the latter to vibrate. Consequently, as the peg cams and trips the key by moving past the latter, the initial action is a compressing of the spring and a raising of the hammer followed by a sudden drop of the hammer, its inertia causing it to strike the reed, and an immediate return of the hammer to nearly normal position due to the tension of the spring. This requires care in the selection of the strength of the spring and a certain amount of frictional damping action at the pivot rod to prevent excessive vibratory action of the lever. Otherwise the hammer may strike the reed more than once for each tripping of the key.

Due to the damping action of the pivot rod, the loudness of tone can be varied by the length of the engagement peg or more specifically, the depth of insertion in its hole.

The rod **14** may be mounted on any suitable supports such as side posts **21** on the support **18** secured to the base **1** by cross members **22**. The reeds may be mounted on a strip **23** secured to the support **18**. The end of the music box containing the reeds may be left open as at **24**, and of course the cover **5** may be entirely omitted.

The support board **18** is spaced from the cover top **4**, so that the reeds vibrate in a partially enclosed structure having the properties of an open pipe when the end **24** is open. This adds to the quality of tone as does the fact that the board **18** functions as a sounding board. Because the reeds vibrate at different amplitude over their entire length, their being disposed between two substantially parallel wall, members **4** and **18**, causes a greater number of overtones. Thus the tones, especially of the longer reeds, are richer and are greatly improved over the usual "tinkle" of similar struck or plucked reeds.

In order to prevent reverse rotation of the drum, and stretching springs **17** the shaft is preferably rotated by a crank **25** mounted on the shaft by means of a ratchet clutch **26**.

The ends **28** of the keys are preferably in line and parallel to the axis of the drum so that loudness may be governed solely by the distance of projection of the pegs.

It is to be noticed that my music box is a percussion instrument rather than a box having a picked comb.

The operator may refer to a chart 30 such as of flat paper, which is a flat representation of the curved surface of the drum 8, preferably ruled longitudinally by lines 31 and transversely by lines 35 to indicate portions of drum sections 9 and longitudinal rows of holes 10, each hole being represented by a legend such as a circle 32. For a particular tune, pegs are inserted in particular holes and such holes to carry the pegs are indicated on the chart by a legend such as a cross 34 within the circle.

While the chart of Fig. 6 shows positions for only six notes and seven may be played on the reeds 16 this is only to emphasize that the length of peg rows and number of reeds may be varied and increased virtually without limit so as to provide a wide range on the musical scale, for example the modern diatonic scale but not limited thereto.

The invention claimed is:

A music box comprising a base and a drum mounted for rotation thereon; a plurality of levers and a pivot rod therefor, the rod being substantially parallel to the axis of the drum, one end of each lever being an engagement arm adjacent the drum and the other end of the lever having a depending hammer; a support board for the rod; a vibratory reed mounted on the board for vibration in a direction normal to the board and mounted under each hammer and adapted to be struck by the hammer; a



cover top over the reeds substantially parallel with the support board for providing confining members having surfaces normal to the direction of vibration, the space between the confining members being open toward free ends of the reeds for adding quality to the tone of the reeds as in a pipe; a spring for each lever and having terminal ends secured fast to the lever engagement arm and to the support board respectively for normally holding the hammer sufficiently spaced from its reed to allow the latter to vibrate and for permitting the engagement arm to be depressed; the ends of said arms all being substantially the same distance from the surface and axis of the drum; the drum being provided with a plurality of radially and longitudinally spaced holes, pegs in said holes and projecting radially from the drum and adapted to engage the end portions of the engagement arms of said levers.


**References Cited** in the file of this patent

UNITED STATES PATENTS

| | | |
|---|---|---|
| 358,157 | Kenyon | Feb. 22, 1887 |
| 449,439 | Freiner | Mar. 31, 1891 |
| 572,950 | Bernard | Dec. 15, 1896 |
| 1,547,183 | Steele | July 28, 1925 |
| 2,250,827 | Fatnauer | July 29, 1941 |
| 2,630,040 | Fraysur | Mar. 3, 1953 |