Sept. 18, 1956 L. J. MARSHALL 2,763,243

PACKAGE BOILER

Filed Aug. 5, 1953 3 Sheets-Sheet 1

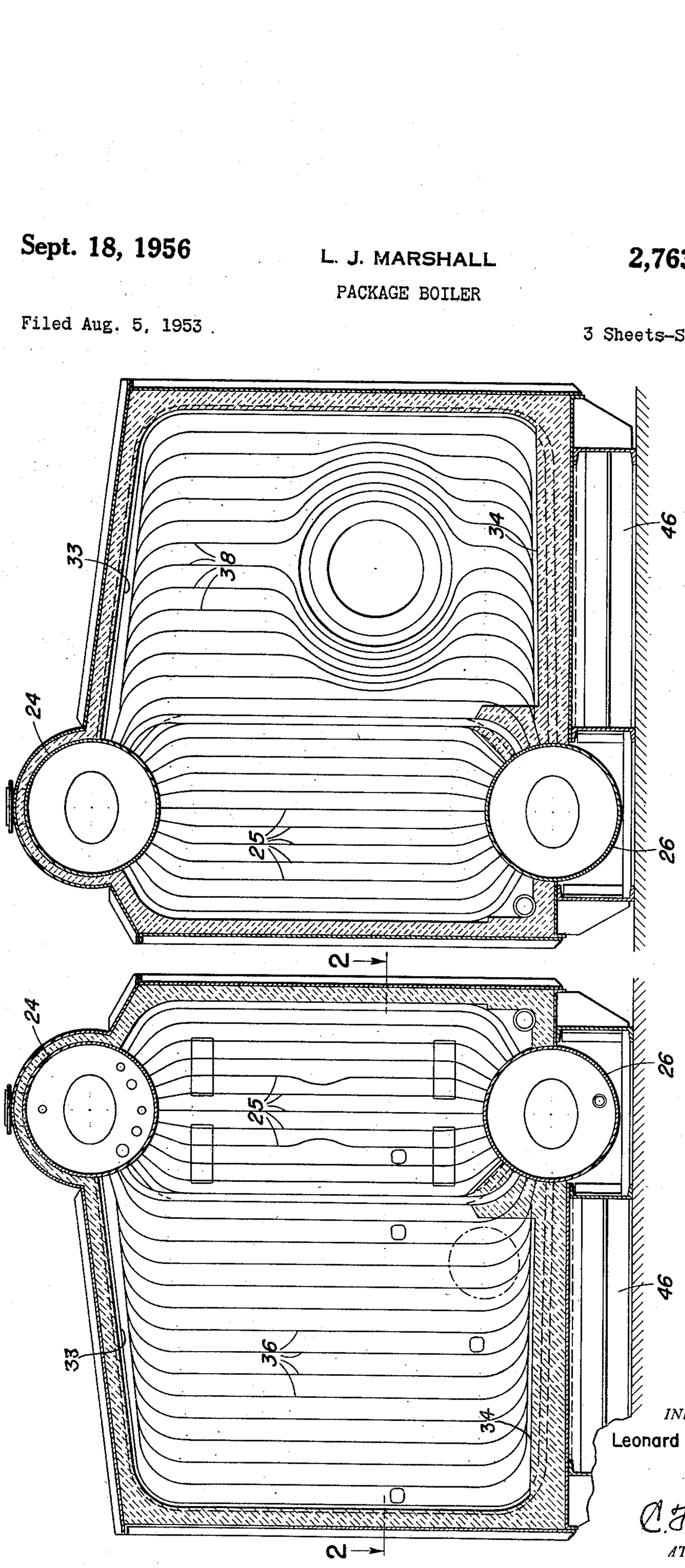

Fig. 3.

Fig. 1.

INVENTOR.
Leonard J. Marshall

C. F. Bryant
ATTORNEY

Sept. 18, 1956

L. J. MARSHALL

2,763,243

PACKAGE BOILER

Filed Aug. 5, 1953

3 Sheets-Sheet 2

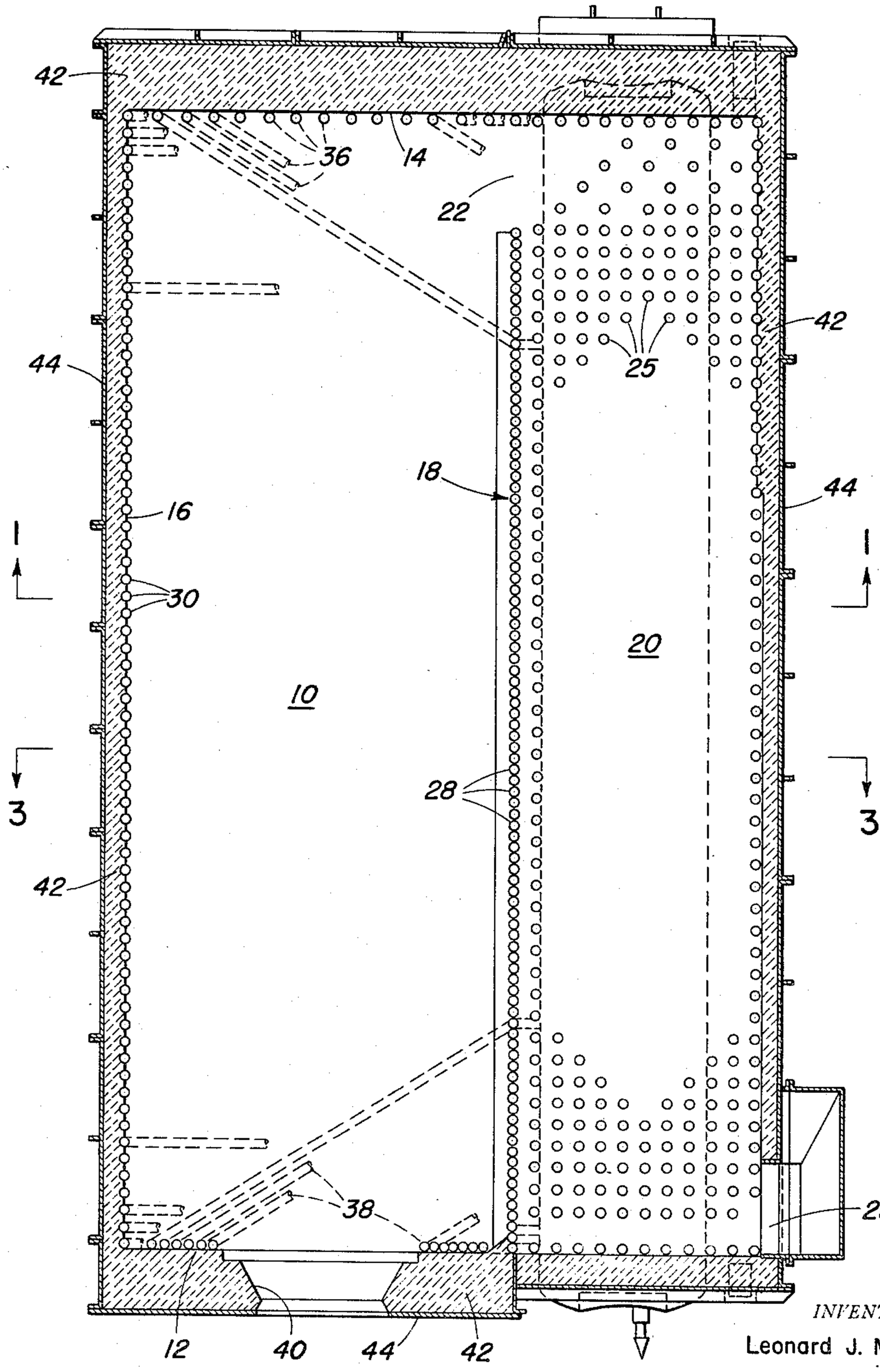

Fig. 2.

INVENTOR.
Leonard J. Marshall

BY

C. J. Bryant
ATTORNEY

Sept. 18, 1956 L. J. MARSHALL 2,763,243

PACKAGE BOILER

Filed Aug. 5, 1953 3 Sheets-Sheet 3

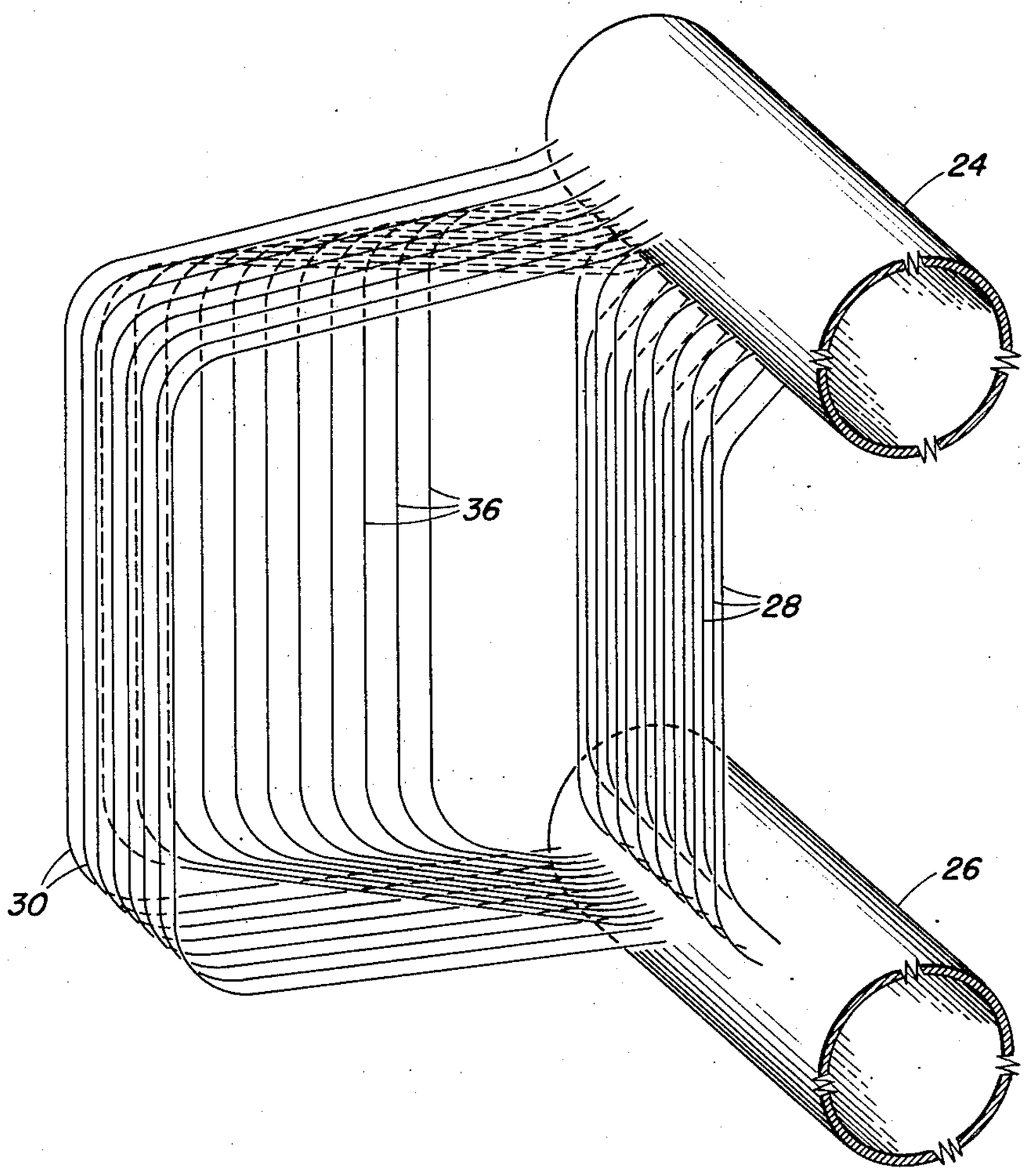

Fig. 4.

INVENTOR.
Leonard J. Marshall

BY C. F. Bryant
ATTORNEY

United States Patent Office

2,763,243

Patented Sept. 18, 1956

2,763,243

PACKAGE BOILER

Leonard J. Marshall, Tenafly, N. J., assignor to Combustion Engineering, Inc., New York, N. Y., a corporation of Delaware

Application August 5, 1953, Serial No. 372,537

1 Claim. (Cl. 122—347)

This invention relates to boilers and particularly to the so-called "package boiler" which is assembled in the boiler shop and shipped as an assembled unit to the user.

The invention comprises a boiler of the aforementioned type having a generally elongated horizontal furnace provided with opposed side walls and opposed front and rear walls. One of the side walls is composed of tubes which are positioned in side by side relation with adjacent tubes being in contact. This wall terminates a short distance from the rear wall of the furnace and also forms the side wall of a horizontal gas pass positioned alongside the furnace and which is in communication with the furnace through the passage formed between the end of the side wall and rear wall. The opposite ends of the aforementioned side by side tubes are connected to upper and lower drums, respectively, which extend longitudinally of the gas pass and are interconnected by a convection tube bank positioned within the gas pass. Also interconnecting these drums are tubes which extend along the roof of the furnace down the other side wall and along or within the bottom of the furnace. The front and rear walls of the furnace are similarly lined with tubes and these latter tubes interconnect the two drums by extending diagonally from the upper and lower ends of the respective front and rear walls to a point immediately adjacent the respective upper and lower drums thence into these drums. The furnace is fired through a suitable opening in the front wall and the combustion gases generated by the burning of fuel within the furnace pass around the rear end of the side wall which separates the furnace and the gas pass and then flow through the gas pass and into a suitable chimney or stack. Heat generated by this burning of fuel is absorbed by the various tubes and steam is thus generated in the usual manner.

Package boilers are shipped from the boiler factory as assembled units and it is therefore necessary that the assemblage be structurally rigid so that when it is being handled and moved about there will be no appreciable relative movement between the elements of the unit since this would cause cracking or destruction of the installation and possible leakage at the connection of the tubes with the drums. Furthermore, in order to insure a long life of this type of boiler with freedom from maintenance it is desired to provide additional heat absorption facilities in the locations where high temperature would be likely to burn out tubes. These objectives are realized in the boiler of this invention in a unique and highly satisfactory manner.

It is the object of the present invention to provide an improved package boiler which is extremely rugged and which has its heat absorbing tubes arranged in a most advantageous manner.

Other and further objects of the invention will become apparent to those skilled in the art as the description proceeds.

With the aforementioned objects in view, the invention comprises an arrangement, construction and combination of the elements of the boiler in such a manner as to attain the results desired as hereinafter more particularly set forth in the following detailed description of an illustrative embodiment, said embodiment being shown by the accompanying drawing wherein:

Figure 1 is a vertical section through the boiler looking toward the rear thereof and taken generally along line 1—1 of Fig. 2;

Figure 2 is a horizontal section taken generally along line 2—2 of Fig. 1;

Figure 3 is a view similar to that of Fig. 1 but looking toward the front of the boiler and taken generally along line 3—3 of Fig. 2;

Figure 4 is a fragmentary perspective view showing the interconnection of a number of tubes with the drums and including the tubes lining the rear wall of the furnace.

Referring now to the drawings, wherein like reference characters designate like elements throughout the several views, the package boiler shown therein is provided with a furnace **10** which includes front wall **12**, rear wall **14** and side walls **16** and **18**. Extending alongside furnace **10** is gas pass **20** which is separated from the furnace by side wall **18** and communicates with the furnace through passage **22** formed between the end of side wall **18** and the rear wall **14**. The other end of the gas pass is provided with outlet passage **23** for discharging combustion gases generated in the furnace to a suitable stack after they have traversed the length of the gas pass. Extending longitudinally of gas pass **20** and positioned at the top and bottom of the gas pass are upper and lower drums **24** and **26**, respectively, the upper of which is the conventional steam and water drum while the lower is the conventional mud drum. These drums are interconnected by convection tube bank **25** which extends throughout the length of gas pass **20** for the absorption of heat from the combustion gases flowing through the gas pass from passage **22** to passage **23**. As embodied the outermost tubes of this tube bank line the outer walls of the gas pass and give support thereto. Also interconnecting drums **24** and **26** are tubes **28** which form wall **18** and for this purpose are arranged in side by side relation with adjacent tubes being in contact and welded together.

Extending along side wall **16** of the furnace are tubes **30** which are bent at the upper and lower ends of the side wall so that the upper portions of the tubes extend along roof **32** and connect into drum **24** while the lower portions are imbedded in floor **34** and connect into drum **26**.

The rear wall **14** of furnace **10** is lined with tubes **36** which extend vertically of the wall and are bent at the upper and lower ends of the wall so that they extend diagonally toward their respective upper and lower drums **24** and **26**. As best shown in Fig. 4, the diagonal extension of the upper portions of tubes **36** underlie the portions of tubes **30** which extend along roof **32** while the diagonal extension of the lower portions of tubes **36** overlie the portions of tubes **30** that are imbedded in floor **34**. These diagonal extensions of the tubes **36** extend to a point immediately adjacent the respective drums **24** and **26** where they are bent so that as to radially enter the drums.

The front wall **12** is lined with tubes **38** in the same manner tubes **36** line rear wall **14** with the diagonal portions of tubes **38** underlying and overlying the upper and lower portions respectively of tubes **30** in the same manner as tubes **36**. Since furnace **10** is fired through front wall **12** which is provided with opening **40** for this purpose, tubes **38** are bent around this opening in order to accommodate the insertion of a suitable burner thereinto and to permit the unobstructed projection of fuel into the furnace.

One of the purposes of arranging the upper and lower

extended portions of tubes **38** and **36** diagonally rather than in some other manner is to provide as rigid a support as possible for the front and rear walls, respectively, of the furnace to withstand the effect of lateral forces acting against these walls.

In addition to providing diagonal bracing for the rear wall of the furnace the diagonal extensions of tubes **36** together with the upper and lower portions of tubes **30** provide a double layer of heat absorbing tubes at a very high temperature location in the furnace which reduces the temperature at this location and reduces the possibility of burning the tubes. Since furnace **10** is fired from front wall **12** the hot gases of combustion sweep lengthwise of the furnace toward rear wall **14** and pass through the relatively restricted passage **22** adjacent the rear wall and into gas pass **20**. This has the effect of making the zone of the furnace immediately in front of passage **22** a very high temperature zone and particularly the upper portion of this zone. Thus by positioning the upper diagonal portions of tubes **36** immediately beneath the upper portions of tubes **30** a double layer of tubes is provided at this location of high temperature thereby increasing the heat absorption and effectively protecting the tube metal from overheating. Furthermore, by interconnecting drums **24** and **26** by tubes **36** in this diagonal manner the length of each of the tubes **36** is the shortest possible thereby maintaining the resistance to flow of each tube at a minimum so that the circulation through each tube and accordingly the heat absorbed by each tube is a maximum all of which insures the required protection at this high temperature zone.

Each of the walls of the boiler, except wall **18** which divides furnace **10** and gas pass **20** and forms a common side wall for each of these chambers, is lined with suitable thermal insulation and refractory material **42** in engagement with the tubes extending along the inner surface of the particular wall and which is held in place by outer steel casing **44** with the whole unit being mounted upon structural steel base **46**.

By lining the inner surface of the outer walls of the entire boiler with tubes which interconnect drums **24** and **26** and particularly by diagonally bracing the end walls of furnace **10** an extremely rigid structure is formed which will readily withstand the rough handling to which such a unit is necessarily subjected.

While I have illustrated and described a preferred embodiment of my novel package boiler it is to be understood that such is merely illustrative and not restrictive and that variations and modifications may be made therein without departing from the spirit and scope of the invention. I therefore do not wish to be limited to the precise details set forth but desire to avail myself of such changes as fall within the purview of my invention.

The tubing arrangement disclosed in this case can conveniently be considered as made up of the line of tubes **28**, the tube bank **25**, the system of tubes **30**, the system of tubes **36** and the system of tubes **38**, the three systems each lining one of the walls of the furnace section.

What I claim is:

A package boiler comprising the combination, with a casing, of an upper drum extending longitudinally of the casing, a lower drum underlying the upper drum and extending longitudinally of the casing and a tubing arrangement connecting said drums; said casing having the form of an elongated rectangle in horizontal cross section and having a front and a rear wall arranged in parallelism, parallel side walls and a floor section and a roof section; refractory material forming a lining for said walls and the roof and floor sections; said tubing arrangement comprising a system of substantially straight contacting tubes communicating with said drums and extending in a straight line from the front wall of the boiler and terminating short of the rear wall and dividing the interior of the boiler into a furnace section and a gas pass connected by a passage at the rear end of the boiler; said arrangement of tubes also comprising in addition a bank of convection tubes communicating with said drums and distributed throughout said gas pass with the outermost tubes of said bank engaging the lining of the gas pass, a first system of tubes having straight vertically extending spaced apart intermediate sections engaging the lining of the outer side wall of the furnace section, a second system of tubes having intermediate straight, vertically extending parallel spaced apart portions engaging the lining of the rear wall of the furnace section, and a third system of tubes having spaced apart vertically extending intermediate portions engaging the front wall of the furnace section, said front wall having an opening therein to permit the introduction of the nozzle of a burner therethrough and said intermediate portions of the tubes of the third system being arranged to clear the path of discharge of fuel into the furnace section; the tubes of the first system having their upper portions extending across the furnace in engagement with the material lining the roof and having their extremities connected at a predetermined level to said upper drum and their lower end portions extending through the refractory material forming the floor of the furnace section and having their extremities connected at a predetermined level to the lower drum; the upper portions of the tubes of the second and third systems forming respectively a rear and a front upper set of straight parallel spaced apart extensions running obliquely across the upper portion of the furnace section immediately below the upper end portions of the tubes of the first system and said sets of extensions having their extremities connected to the upper drum in short straight lines running respectively from the opposite ends of the drum and terminating short of the middle thereof, the lower portions of the tubes of the second and third systems forming respectively a rear and a front lower set of straight, parallel spaced apart extensions running diagonally across the lower part of the furnace section and above the floor thereof, said lower sets of extensions having their extremities connected to the lower drum in relatively short straight lines running from the opposite ends of the drum toward and stopping short of the center thereof at a level above the level of the connection of the lower portions of the tubes of the first system to the lower drum.

References Cited in the file of this patent

UNITED STATES PATENTS

2,244,451	Falla	June 3, 1941
2,561,839	Behr	July 24, 1951
2,655,138	Falla	Oct. 13, 1953