April 3, 1956 C. F. LOWER 2,740,887

CONTROL APPARATUS FOR HIGHWAY CROSSING SIGNALS

Filed Nov. 28, 1951

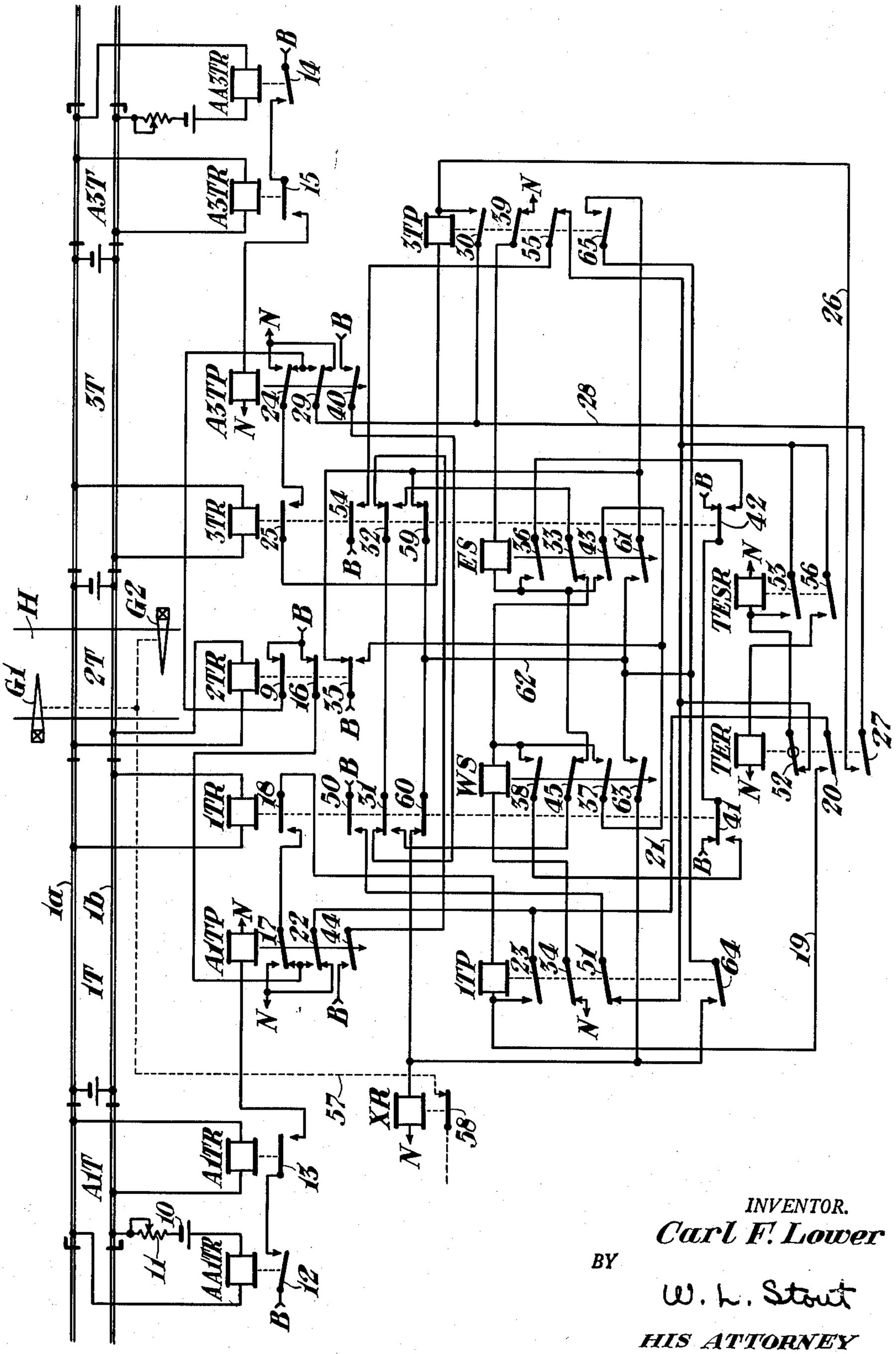

INVENTOR.
Carl F. Lower

BY

W. L. Stout

HIS ATTORNEY

United States Patent Office

2,740,887

Patented Apr. 3, 1956

2,740,887

CONTROL APPARATUS FOR HIGHWAY CROSSING SIGNALS

Carl F. Lower, Edgewood, Pa., assignor to Westinghouse Air Brake Company, Wilmerding, Pa., a corporation of Pennsylvania

Application November 28, 1951, Serial No. 258,684

7 Claims. (Cl. 246—130)

My invention relates to control apparatus for highway crossing signals, and more particularly to control apparatus wherewith the warning condition of a highway crossing signal is automatically discontinued after a selected time interval when a train stops or is switching in a control approach section and when a track circuit condition that creates the warning condition of the highway crossing signal unnecessarily occurs.

If a highway crossing signal is operated to its warning position when no train is actually approaching the highway crossing and no dangerous condition to the highway users exists, the highway users form a habit of disregarding the warning signal with the result an accident may occur because a highway user disregards the warning signal when a train is approaching. In order to avoid this unsatisfactory condition at highway crossings protected by automatic signals there are in use control arrangements for restoring a highway crossing signal to its clear condition automatically after a selected time interval once it has been set to warn highway users. These control arrangements heretofore used are not entirely satisfactory because they are usually designed for a specific track layout and are not adaptable for general use. For example, the control apparatus for highway crossing signals can be classified into those adaptable for use in signaled territory of the railway and those adaptable for use in nonsignaled territory. In signaled territory a broken rail and any other abnormal track circuit condition for a control section of a highway crossing signal is reflected by a restrictive indication of a railway signal and the train is required to reduce its speed and thereby the danger to highway traffic over the crossing is decreased. In nonsignaled territory of a railway, a broken rail and other track circuit failures for a control section are not reflected by a restrictive railway signal and the measure of protection obtained by reduced train speed is not obtained and consequently the usual control arrangement for restoring the highway crossing signal to its clear condition after a selected time interval may not be safe.

In view of the foregoing circumstances in the control of highway crossing signals, a feature of my invention is the provision of control apparatus for highway crossing signals which incorporates novel means for returning a highway crossing signal to its clear condition after a predetermined time interval once it has been set to warn highway users.

Another feature of my invention is the provision of control apparatus for highway crossing signals incorporating novel and improved means wherewith a highway crossing signal is returned automatically to its clear position after a predetermined time interval once it has been set to display a danger indication regardless of whether the danger indication was caused by a train occupying a control section or due to a broken rail or some other track circuit condition.

Again, a feature of my invention is the provision of highway crossing signal control apparatus of the type

here contemplated incorporating improved means for reestablishing a danger or warning condition of a signal, which has been returned automatically to its clear position after a predetermined time interval, when a train subsequently approaches the crossing.

Another feature of my invention is the provision of improved control apparatus for automatic highway crossing signals wherewith the warning operation of the signal is effected when a train enters the control section notwithstanding a broken rail occurred as a preceding train traversed a control section in receding from the crossing, or a broken rail occurred in an approach control section as a preceding train was approaching the crossing.

Another feature of my invention is the provision of highway crossing signal control apparatus incorporating improved means wherewith the so-called undesirable "back ringing" action is avoided.

A further feature of my invention is the provision of novel and improved control apparatus for highway crossing signals requiring the use of only one time measuring means for both directions of traffic on the railway.

Other features, objects and advantages of my invention will appear as the specification progresses.

I obtain the foregoing features, objects and advantages of my invention by the provision of a novel and improved circuit network which includes a main control approach track section and an auxiliary or preliminary approach track section on each side of the highway crossing together with a positive operating track section at the crossing and extending a selected distance each side of the crossing. Each of these track sections is provided with a track circuit. A signal control repeater relay is provided for the two main approach sections and controlled by the track circuit of the corresponding section and by a time measuring means adjustable to operate contacts a selected time interval after the energization thereof. Each of these repeater relays is provided with contacts for completing a circuit path by which the highway crossing signal is operated to its clear condition or position and hence each repeater relay is effective to restore the highway crossing signal to its clear condition after a selected time interval as determined by the time measuring means when a train stops in the approach section or a failure of the track circuit of that section occurs. The track circuit for each preliminary track section is provided with a track circuit having a relay the contacts of which are arranged to control the energization of the control repeater relay for the associated main approach section, this arrangement being such as to deenergize the repeater relay when a train approaches the crossing through the preliminary approach section.

The circuit network also includes directional stick relays controlled by the track circuits of the main and auxiliary approach sections and by the signal control repeater relays, this directional control being such that the directional stick relays are restored to their normal deenergized condition when the highway crossing signal is restored to its clear condition after the selected time interval as determined by the time measuring means. The network is further provided with a control stick relay for the timing means, and which is included in the network in such a manner that the commonly undesirable operation sometimes called "back ringing" is avoided.

It is to be understood that a highway crossing signal as considered in this application may be any one of several known forms of highway crossing protection devices, such as, for example, an electric bell, stationary and flashing red lights, wig-wag, gates and barriers, the apparatus of my invention being effective to control the operation of any one or any combination of these several forms of highway crossing protection devices to a clear

condition or position where highway traffic is not obstructed and to a danger or warning condition which warns and obstructs the highway traffic.

I shall describe one form of apparatus embodying my invention and shall then point out the novel features thereof in claims.

The accompanying drawing is a schematic view showing a preferred form of apparatus embodying my invention when used at the crossing of a highway and a stretch of nonsignaled single track railway. It is to be understood, however, that my invention is not limited to this one arrangement and this disclosure is by way of illustration, the apparatus being useful for other intersections of highways and railway tracks.

Referring to the drawing, the reference characters **1***a* and **1***b* designate the track rails of a stretch of railway track which is intersected by a highway H. This track may be that of a single track railway or it may be one track of a multiple track railway, but it is here considered as a single track railway over which traffic moves in either direction.

Highway crossing signals are provided at the intersection of the highway H with the railway, the signals being shown as crossing gates G1 and G2, but as pointed out hereinbefore, other forms of highway crossing protection devices can be used. It is sufficient for the present application to point out that each of the gates G1 and G2 includes an arm which is operable to a clear position where it does not interfere with highway traffic and to a danger or warning position where it extends across at least a portion of the highway as a warning to highway users that a train is approaching.

The rails **1***a* and **1***b* are formed by the usual insulated rail joints into a group of track sections A1T, 1T, 2T, 3T and A3T, the sections A1T and 1T being formed to the left of the intersection, the section 2T being formed at the intersection and the sections 3T and A3T being formed to the right of the intersection. As will appear hereinafter, the sections 1T and 3T are main approach control sections and are preferably of a length such that a train traveling at the maximum permissible speed for all trains will consume a selected time interval in passing therethrough, a time interval of the order of 20 to 25 seconds being generally considered satisfactory.

The sections A1T and A3T are auxiliary or preliminary approach sections and each is relatively short. The section 2T at the intersection of the highway crossing is a positive operating section and is of a length such that it extends a selected distance in each direction from the intersection. Thus, the two sections A1T and 1T are auxiliary and main approach control sections, respectively, which an eastbound train traverses in the order named in approaching the highway crossing, the sections A3T and 3T are auxiliary and main approach control sections, respectively, which a westbound train travels in the order named in approaching the crossing, and the section 2T is a positive operating section which provides satisfactory warning operation of the highway crossing signal when a train is traveling in either direction at a relatively low speed.

Each of these track sections is provided with a track circuit which as here shown is of the direct current type but other types of track circuits can be used. The track circuits for the auxiliary track sections A1T and A3T include both a series and a multiple track relay. Looking at section A1T, a track battery **10** and a relay AA1TR are connected in series across the rails of the section through a current limiting resistor **11**, and a relay A1TR is connected across the rails. The arrangement is such that the relay A1TR is energized and picked up when the section is unoccupied and is deenergized and released when the rails are shunted by a train. The current flowing in the relay AA1TR is insufficient to pick up that relay when the section is unoccupied but the current is increased to a value sufficient to pick up the relay AA1TR when the rails are shunted. Similarly, the track circuit for the section A3T includes a series track relay AA3TR which is normally released and is picked up when the rails are shunted by a train, and a relay A3TR which is normally picked up and is released when a train occupies the section.

The track circuit for each of the sections **1T**, **2T** and **3T** is of the commonly used type which includes a battery connected across the rails at one end of the section and a track relay designated by the reference character R plus a prefix corresponding to the section, connected across the rails at the other end of the section, these track circuits being apparent from an inspection of the drawing.

A suitable source of power is provided for supplying current to the control apparatus, this source of power being preferably a direct current source such as a battery, not shown, the positive and negative terminals of the battery being indicated by the reference characters B and N, respectively.

The track circuits for the preliminary approach sections A1T and A3T are used to control repeater relays A1TP and A3TP, respectively. The relay A1TP is controlled by a circuit that includes front contact **12** of relay AA1TR and back contact **13** of relay A1TR; and the repeater relay A3TP is controlled by a circuit including front contact **14** of relay AA3TR and back contact **15** of relay A3TR. Consequently, each of the repeater relays A1TP and A3TP is energized and picked up only when the corresponding section is occupied by a train.

Two direct current neutral signal control repeater stick relays 1TP and 3TP are provided, the relay 1TP being associated with the approach section 1T and the relay 3TP being associated with the approach section 3T. Each of these signal control repeater relays is provided with a pickup and a stick circuit. Referring first to relay 1TP, this relay is provided with a pickup circuit which extends from terminal B of the power source through front contact **16** of track relay 2TR for the section 2T, a first pole changing back contact **17** of the repeater relay A1TP, back contact **18** of track relay 1TR for the section 1T, winding of relay 1TP, wire **19**, front contact **20** of a time element relay TER to be described hereinafter, wire **21** and a second pole changing back contact **22** of the relay A1TP to terminal N. The stick circuit for the relay 1TP is the same as the pickup circuit traced above except to include its own front contact **23** which shunts the front contact **20** of the time element relay TER. Thus, it is to be seen that when the repeater relay A1TP is released, closing back pole changing contacts **17** and **22**, current flows in the winding of the signal control repeater relay 1TP in one direction which as viewed in the drawing is from right to left but that when the relay A1TP is picked up in the manner explained above, to close its front pole changing contacts **17** and **22**, the circuit for relay 1TP is pole changed and the direction of the flow of current in the winding of relay 1TP is reversed.

Similarly, the signal control repeater relay 3TP is provided with a pickup and a stick circuit, the pickup circuit extending from terminal B of the current source, through front contact **9** of track relay 2TR, back pole changing contact **24** of relay A3TP, back contact **25** of track relay 3TR, winding of relay 3TP, wire **26**, front contact **27** of the time element relay TER, wire **28**, and back pole changing contact **29** of relay A3TP to terminal N. The stick circuit for the relay 3TP is the same as the pickup circuit except to include its own front contact **30** which shunts the front contact **27** of the relay TER. Thus, when relay A3TP is released, closing its back pole changing contacts **24** and **29**, current flows in the winding 3TP from left to right as viewed in the drawing, and when the relay A3TP is picked up closing its front pole changing contacts **24** and **29**, the circuit for relay 3TP is pole changed and the direction of the current flow-

ing in its winding is reversed. The utility of this reversal of the direction of the flow of current in each of the signal control repeater relays 1TP and 3TP which are direct current neutral relays will be pointed out when the operation of the apparatus is described.

Timing for obtaining a selected time interval suitable for determining the period at the expiration of which the highway crossing gates G1 and G2 are to be restored to a clear position is effected by a time element relay TER and an associated stick relay TESR. The time element relay TER may take different forms and it may be any one of several known forms for such time element relays. It is sufficient for the present application to point out that upon becoming deenergized the contact carrying member of relay TER is returned quickly to its initial biased position where a checking contact is closed. This contact member of the relay TER is actuated away from its initial position to a position where front contacts are closed only after the relay has been energized a time interval selected by adjustment of the relay. That is, the front contacts of the time element relay are closed only after current has been supplied to the relay for a predetermined time interval, the adjustment of the relay being such that a range of time intervals from a few seconds up to a minute or more can be obtained.

The relay TER and its stick relay TESR are provided with alternative circuits, one controlled by eastbound traffic approaching the highway crossing and the other controlled by westbound traffic approaching the highway crossing. Specifically, a circuit for energizing the relay TESR in response to an eastbound train entering the section 1T, can be traced from terminal B through back contact 50 of track relay 1TR, back contact 51 of the signal control repeater relay 1TP, check contact 52 of the relay TER and winding of relay TESR to terminal N. The relay TESR on picking up to close its front contact 53 completes a stick circuit path around the check contact 52. Similarly, a circuit is completed for the relay TESR in response to a westbound train entering section 3T, the circuit extending from terminal B through back contact 54 of track relay 3TR, back contact 55 of the signal control repeater relay 3TP, check contact 52 and winding of relay TESR to terminal N, the front contact 53 of relay TESR again completing a stick circuit around the check contact 52. Current is supplied to the time element relay TER through front contact 56 of the relay TESR and either of the two alternative circuits above traced for the relay TESR as will be apparent from an inspection of the drawing. Hence, it is to be seen that when an eastbound train enters the section 1T, the relay TESR is picked up and current is supplied to the time element relay TER and it is operated to close front contacts 20 and 27 after a predetermined time interval, providing the train remains in the section 1T for a period greater than the time interval for which the time element relay is adjusted. Also, it is apparent that if the current supplied to the time element relay TER is interrupted at any time before its front contacts have been closed, the contact member of the relay is at once released and restored to its initial position due to the characteristics of the relay. Similarly, when a westbound train enters the section 3T, current is supplied to the time element relay TER to operate the relay at the end of its adjusted time interval. It is to be pointed out that the relay TER is ordinarily adjusted for a time interval greater than that consumed by a train traveling at a reasonable speed through the track sections, and the relay is operated for a sufficient period to close its front contacts only when the train is unduly delayed in the approach section or there is a failure of a track circuit.

Directional control is obtained for the apparatus by two directional stick relays ES and WS. Each of the directional stick relays ES and WS is provided with a pickup circuit and two stick circuits. Looking at the relay WS, for example, this relay is provided with a

pickup circuit that extends from terminal B through front contact 40 of relay A3TP, front contact 31 of track relay 1TR, back contact 32 of track relay 3TR, back contact 33 of the opposing directional relay ES, winding of relay WS and back contact 34 of the signal control repeater relay 1TP to terminal N. The first stick circuit for the relay WS includes terminal B, back contact 35 of track relay 2TR, front contact 37 of relay WS, winding of the relay, back contact 34 of relay 1TP and terminal N. The second stick circuit for the relay WS includes front contact 42 of track relay 3TR, back contact 41 of the track relay 1TR, front contact 38 and winding of the relay and back contact 34 of relay 1TP. Referring to the directional relay ES, this relay is provided with a pickup circuit that extends from terminal B through front contact 44 of relay A1TP, front contact 32 of track relay 3TR, back contact 31 of track relay 1TR, back contact 45 of the opposing stick relay WS, winding of relay ES and back contact 39 of repeater relay 3TP to terminal N. The first stick circuit path for the relay ES extends from terminal B through back contact 35 of the track relay 2TR, front contact 43 and winding of relay ES and back contact 39 of relay 3TP to terminal N; while the second stick circuit path for relay ES includes the front contact 41 of relay 1TR, back contact 42 of relay 3TR and its own front contact 36.

The control of the highway crossing gates G1 and G2 is accomplished through a signal control relay XR, the control network for operating the gates G1 and G2 being indicated conventionally by a dotted line 57, since this control network can be any one of several known arrangements and the specific control provided for the gates forms no part of my present invention. It is sufficient to point out that when relay XR is energized closing front contact 58 the gates are operated to a clear position and when the relay is deenergized opening front contact 58, the gates are operated to a warning or danger position.

The signal control relay XR is in turn provided with a circuit network including several different circuit paths. Normally, that is, when no train occupies any of the control sections, a circuit path is completed by which current flows from terminal B through front contact 35 of track relay 2TR, front contact 59 of track relay 3TR, front contact 60 of relay 1TR and winding of relay XR to terminal N. The remaining circuit paths for relay XR which are closed under different operating conditions of the apparatus will be pointed out when the operation of the apparatus is described.

Normally, that is, when no train occupies any of the control sections, the apparatus occupies the position illustrated in the drawing and the gates G1 and G2 are held at their clear position. I shall assume that with the apparatus at the normal position an eastbound train approaches the highway crossing. As this train passes through the preliminary approach section A1T, the relay AA1TR is picked up and the relay A1TR is shunted so that the relay A1TP is energized.

When the head end of the train enters the section 1T, the track relay 1TR is shunted and released. The opening of front contact 60 of the track relay 1TR opens the normal circuit path for the signal control relay XR and that relay is deenergized since at this time none of its other circuit paths are closed. With the relay XR released, the gates G1 and G2 are operated to their warning condition, that is, they are lowered across the highway. It is to be noted that relay A1TP is picked up closing its front contact 44 when the track relay 1TR is shunted by the train entering section 1T and thus the closing of back contact 31 of the track relay 1TR completes the previously traced pickup circuit for the directional relay ES and that relay is picked up. The closing of back contact 50 of the track relay 1TR completes a circuit for the relay TESR and that relay along with the time element relay TER are energized, the time

element relay TER being set into operation to measure its selected time interval. This condition just described for the apparatus will remain in effect while the train advances through the approach control section 1T. I shall assume that this train is traveling at a reasonable speed and the time consumed for the head end of the train to reach and pass over the crossing is something less than the selected time interval for which the time element relay TER is adjusted to operate its contacts.

The shunting of the track relay 2TR of section 2T by the train to open front contact 35, opens the circuit for relay XR at a second point. Also, the closing of back contact 35 of relay 2TR completes the first stick circuit for the directional relay ES and that relay is retained picked up. When the head end of the train enters the section 3T, the track relay 3TR is shunted, and thus when the rear of the train vacates the section 1T and relay 1TR is reenergized closing front contact 41, the second stick circuit for the directional relay ES is completed and the relay is retained energized as the train recedes from the crossing through section 3T. Under this condition of the apparatus, the signal control relay XR is provided with a circuit path which extends from terminal B through front contact 35 of track relay 2TR, front contact 61 of the directional relay ES, a connection 62, front contact 60 of track relay 1TR and winding of relay XR to terminal N. Hence, as the train recedes from the crossing through the section 3T, the relay XR is energized and the gates are operated to the clear position to permit highway traffic to move over the crossing. As this eastbound train moves through the section A3T, the relays of the track circuit of that section are operated, but the operation of these relays at this time performs no useful function.

The operation of the apparatus for a westbound train moving through the respective track sections at a reasonable speed is similar to that just described in connection with an eastbound train and the operation of the apparatus for a westbound train will be apparent from an inspection of the drawing taken in connection with the description of the operation of the apparatus for the eastbound train.

It is to be observed that when a westbound train has cleared the crossing and vacated the track section 2T and is receding from the crossing through the section 1T, the signal control relay XR is provided with a circuit path extending from terminal B, through front contact 35 of relay 2TR, front contact 59 of track relay 3TR, cross connection 62, front contact 63 of directional relay WS and winding of relay XR to terminal N.

I shall next assume that with the apparatus in its normal position an eastbound train enters the section 1T and stops in the section for a period greater than the time required for the time element relay TER to operate its contacts. As this train enters the section 1T and shunts the track relay 1TR, the signal control relay XR is deenergized and released due to the opening of front contact 60 of relay 1TR and thus the gates G1 and G2 are operated to their warning position in response to the approach of a train in section 1T. With the train stopping in the section 1T for a period greater than the selected time interval for the operation of relay TER, that relay is operated and closes its front contact 20 since it is supplied with current over the circuit including back contact 50 of the track relay 1TR. With the front contact 20 of relay TER closed, the previously traced pickup circuit for the signal control repeater relay 1TP is closed and that relay is energized and picked up and then retained energized by its stick circuit, the relays TESR and TER being at once restored to their normal and initial position due to the opening of back contact 51 of relay 1TP. With repeater relay 1TP picked up, the signal control relay XR is provided with a circuit path that extends from terminal B through front contact 35 of relay 2TR, front contact 59 of relay

3TR, cross connection 62, front contact 64 of relay 1TP and winding of relay XR to terminal N. This results in the relay XR being energized and picked up so that the gates are operated to their clear position while the train is standing in the section 1T. When this train again advances to approach the crossing it will do so at a relatively slow speed. The train upon entering the positive operating section 2T shunts the track relay 2TR, opening front contact 35 interposed in the control circuit for relay XR with the result relay XR is released and the gates are operated to their danger position. It will be recalled that the section 2T extends a selected distance each side of the crossing and satisfactory operation of the highway crossing gate is effected for a train approaching the intersection at a relatively low speed.

The directional relay ES is energized and picked up in response to this eastbound train the same as explained for the previous eastbound train and thus the gates are cleared when the train passes over the intersection and recedes therefrom through the section 3T in the same manner as previously explained.

Assuming next that a westbound train approaches the crossing and stops in the section 3T, the track relay 3TR is released to open front contact 59 and cause the signal control relay XR to be deenergized so that the gates are operated to their danger position. Also, the relays TESR and TER are supplied with current over the circuit path through back contact 54 of the track relay 3TR so that with the train standing in section 3T for a period greater than the selected time interval for the operation of the time element relay TER, that relay picks up at the end of this time interval to close front contact 27 and completes the previously traced pickup circuit for the repeater relay 3TP and relay 3TP picks up and then is retained energized by its stick circuit after the relays TESR and TER are restored to their initial positions. With the repeater relay 3TP picked up, the signal control relay XR is provided with a circuit path that includes front contact 35 of track relay 2TR, front contact 65 of repeater relay 3TP, cross connection 62, front contact 60 of track relay 1TR and winding of relay XR with the result the relay XR is energized and the gates operated to their clear position while the train is standing in the section 3T. When this westbound train again advances toward the intersection it will do so at a relatively low speed and upon entering the section 2T the shunting of track relay 2TR opening front contact 35 causes the relay XR to be released so that the gates are again operated to their warning position. This time the directional relay WS is picked up due to the train in section 3T and with relay WS picked up it is effective to complete a circuit at its front contact 63 for the relay XR and the gates are operated to their clear position as soon as the westbound train clears the intersection and vacates the track section 2T. Thus, it is to be seen from the foregoing description that with a train stopping in either section 1T or 3T as it approaches the intersection, the gates are cleared at the end of a selected time interval and then restored to their warning position when the train again approaches the intersection and occupies the positive operating track section 2T.

I shall next assume that with the apparatus in its normal position the track circuit of the section 1T fails due to a broken rail or some other similar condition so that the track relay 1TR is released. When the track relay 1TR releases opening front contact 60, the normal circuit path for the signal control relay XR is opened and the relay XR released causing the gates to be operated to their lowered positions. The closing of back contact 50 of track relay 1TR completes one of the circuits for supplying current to the relay TESR and in turn to the time element relay TER with the result the relay TER is operated at the end of its selected time interval to close front contact 20 and complete the pickup circuit for

the repeater relay 1TP. With the relay 1TP picked up it is retained energized by its stick circuit as previously explained and the relays TESR and TER are restored to their initial positions. Also, the picking up of relay 1TP to close front contact 64 completes the previously traced circuit path for the relay XR and that relay is energized so that the gates are operated to their clear position with the result that the highway users are delayed no longer than the selected time interval of operation of the time element relay due to the broken rail or track circuit failure of the approach section 1T. It is to be noted that the directional relay ES is not at this time energized because the pickup circuit for the relay ES is held open at the front contact 44 of the relay A1TP. Assuming that subsequent to this failure of the track circuit for section 1T and the clearing of the gates at the end of the selected time interval, an eastbound train approaches the crossing and enters the sections A1T and 1T. The train in moving through the section A1T causes the relay A1TP to be picked up. With the closing of front contact 44 of relay A1TP, the directional relay ES is energized in response to this eastbound train. Also, the picking up of relay A1TP pole changes the connection for the stick circuit of the repeater relay 1TP. This pole changing of the circuit causes the current to reverse its direction through the winding of relay 1TP and thereby causes the armature of the relay 1TP to be released because the relay 1TP is a direct current neutral relay and it is well known that a reversal of the polarity of the current flowing in a neutral relay causes the magnetic flux of the relay to die down, pass through zero and build up in the opposite direction, and as the magnetic flux passes through zero the armature of the relay is released. In the case of repeater relay 1TP the release of the armature opening front contact 23 opens the stick circuit by which the relay is energized and thereby the armature once released remains released until the relay is again energized through its pickup circuit. With the repeater relay 1TP released the circuit for providing current to the signal control relay XR, and which circuit path includes front contact 64 of relay 1TP, is open with the result the relay XR is released causing the gates to be operated to the warning position. Hence, the warning position of the highway crossing gates is reestablished when an eastbound train approaches the crossing subsequent to the failure of the track circuit of section 1T and the clearing of the gate through the time element means. Obviously, this operation of the gate in response to a train approaching the crossing subsequent to the failure of a track circuit is essential in nonsignaled territory of a railroad. Furthermore, such an operation greatly adds to the safety of the highway traffic even in signaled territory of a railway.

It is to be pointed out that while this eastbound train recedes from the crossing through section 3T and there is a broken rail or some other circuit failure in track section 1T that causes the track relay 1TR to remain released after the train vacates the section, the directional relay ES is released because its second stick circuit is held open at front contact 41 of the track relay 1TR. This results in the gates not being cleared until the time element relay TER has completed its operation to close front contact 20 and pick up the repeater relay 1TP in the manner previously explained. This retaining of the gate at the warning position after the eastbound train has passed over the crossing for the selected time interval serves as an indication to the maintainer that there is an abnormal condition in the circuits.

Assuming that a broken rail or some other track circuit failure in section 1T has caused the gates to be lowered and then cleared due to the operation of the time element relay TER, to pick up relay 1TP as explained above, and a westbound train approaches the crossing, the gates are lowered to their warning position in response to this westbound train entering the section 3T to shunt the track relay 3TR. This is so because the opening of front contact 59 of relay 3TR opens the circuit path by which the signal control relay XR is being energized, this path also including front contact 64 of the repeater relay 1TP. As this westbound train passes over the crossing and moves over the section 1T the gates are retained at their lowered position as an indication of an abnormal condition of the circuit because the directional relay WS is not picked up due to the pickup circuit being held open at back contact 34 of the repeater relay 1TP when the train is in the section 3T and then at back contact 32 of track relay 3TR when the train has cleared the crossing. Consequently, the gates are retained lowered until the time element relay TER has again had time to close its front contact 20 and reenergize the repeater relay 1TP in response to this failure in the track section 1T.

A track circuit failure in the section 3T which causes the track relay 3TR to be released will result in an operation of the apparatus similar to that explained above in connection with a track circuit failure in the section 1T and release of track relay 1TR and the operation of the apparatus in response to a failure of a track circuit for section 3T will be apparent from an inspection of the drawing taken in connection with the description of the operation of the apparatus for a failure in the track circuit of the section 1T.

Assuming next that the apparatus is normal and an eastbound train approaches the crossing causing the gates to be operated as explained hereinbefore and then a rail of the section 3T is broken as this eastbound train is moving away from the crossing through the section 3T so that the track relay 3TR remains released after the train vacates the section 3T, the directional relay ES is retained energized by its second stick circuit and relay XR is energized by the circuit path through front contact 61 of relay ES. However, under these circumstances, the time element relay TER is supplied with current by the circuit through back contact 55 of relay 3TP and back contact 54 of relay 3TR so that at the end of its operating period the time element relay TER picks up closing front contact 27 in the pickup circuit for the repeater relay 3TP and that relay is picked up. The picking up of relay 3TP completes a second circuit path at its front contact 65 for the relay XR and the gates are retained at their clear position. The picking up of the relay 3TP opening back contact 39 in the circuit for the directional relay ES causes the directional relay to be deenergized and restored to its released position.

In the event a westbound train approaches the crossing subsequent to this broken rail condition in section 3T, the train in passing through the preliminary approach section A3T causes relay A3TP to be picked up and thereby pole change the current being supplied to the relay 3TP with the result that that relay is released because of the reversal of the magnetic flux in the relay and the relay then remains released because of the opening of its own stick contact 30. This releasing of the relay 3TP means that the signal control relay XR is deenergized and the gates are operated to their lowered position as this westbound train approaches the crossing through section 3T. Similarly, the apparatus operates in the event a rail in the section 1T becomes broken as a westbound train recedes from the crossing through section 1T leaving the track relay 1TR released after the train vacates the section 1T and the description of this operation of the apparatus need not be repeated.

Although I have herein shown and described but one form of control apparatus for highway crossing signals embodying my invention, it is understood that various changes and modifications may be made therein within the scope of the appended claims without departing from the spirit and scope of my invention.

Having thus described my invention, what I claim is:

1. In control apparatus for a highway crossing signal operable to a clear and a warning condition and located adjacent the intersection of a highway and a railway track, the combination comprising, a track circuit for a track section formed in the railway track adjacent one side of the intersection and having a track relay provided with contacts operable to different positions according as the track section is unoccupied or occupied by a train, means including a contact of said track relay having connections to said signal to operate the signal to its clear or warning condition according as the track section is unoccupied or occupied by a train, an electrical time measuring means having a contact closed only when current is supplied thereto for a selected time interval, said time measuring means being normally without a supply of current, means including a contact of said track relay closed when the section is occupied or said track circuit is open having connections to the time measuring means for supplying current thereto, a repeater relay having a pickup circuit including said contact of the time measuring means and a stick circuit including a contact of said track relay closed when the section is occupied or said track circuit is open, circuit means including a front contact of said repeater relay having connections to said signal to operate the signal to its clear condition, another track circuit located adjacent the end of said track section remote from the intersection and having a contact operable in response to a train approaching the intersection, and means including said last mentioned contact when operated to deenergize said repeater relay.

2. In control apparatus for a highway crossing signal located adjacent an intersection of a highway and a railway track and operable to a clear and a danger condition, the combination comprising, a track section formed in the railway track to one side of the intersection and provided with a track circuit including a track relay which is energized or deenergized according as the section is not or is occupied by a train, circuit means connected to said signal and including a contact of said track relay to operate the signal to its clear or danger condition according as the track relay is energized or deenergized, an electrical time measuring means having a contact which is closed only when current is supplied to the time measuring means a selected time interval, means including a contact of said track relay closed when the relay is deenergized connected to said time measuring means to supply current thereto, a direct current neutral repeater relay provided with a pickup circuit including said contact of said time measuring means and with a stick circuit including a contact of said track relay closed when the track relay is deenergized, other circuit means including a front contact of said repeater relay connected to said signal to operate the signal to its clear condition, another track section formed in said track adjacent the end of the first mentioned track section remote from the intersection and provided with a track circuit including a track relay responsive to a train occupying said another section, and means including a contact of the last mentioned track relay to pole change said stick circuit of said repeater relay when a train enters said another track section whereby the repeater relay is released and the signal operated to its danger condition when a train approaches the intersection subsequent to the signal having been operated to its clear condition due to said time measuring means.

3. In control apparatus for a highway crossing signal located adjacent an intersection of a highway and a railway track and operable to a clear and a danger condition, the combination comprising, a track section formed in the railway track to one side of the intersection and provided with a track circuit including a track relay which is energized or deenergized according as the section is not or is occupied by a train, circuit means connected to said signal and including a contact of said track relay to operate the signal to its clear or danger condition according as the track relay is energized or deenergized, an electrical time measuring means having a contact which is closed only when current is supplied to the time measuring means a selected time interval, means including a contact of said track relay closed when the relay is deenergized connected to said time measuring means to supply current thereto, a direct current neutral repeater relay provided with a pickup circuit including said contact of said time measuring means and with a stick circuit including a contact of said track relay closed when the track relay is deenergized, other circuit means including a front contact of said repeater relay connected to said signal to operate the signal to its clear condition, another track circuit located adjacent the end of said track section remote from the intersection and including a contact which is operated in response to a train approaching the intersection, and means including said last mentioned contact when operated to pole change said stick circuit of said repeater relay and thereby deenergize the relay and cause said signal to be operated to its danger condition when a train approaches the intersection subsequent to an operation of said time measuring means.

4. In control apparatus for a highway crossing signal operable to a clear and a warning condition and located adjacent the intersection of a highway and a railway track, the combination comprising, a track circuit for a track section formed in the railway track adjacent one side of the intersection and having a track relay provided with contacts operable to different positions according as the track section is unoccupied or occupied by a train, means including a contact of said track relay having connections to said signal to operate the signal to its clear or warning condition according as the track section is unoccupied or occupied by a train, an electrical time measuring means having a contact biased to an open position and operated to a closed position only when current is supplied to the time measuring means for a selected time interval, said time measuring means normally without current, a circuit means including a current source and a contact of said track relay closed when the section is occupied or said track circuit is open and connected to said timing means for supplying current thereto, a direct current neutral repeater relay having a pickup circuit including said contact of the time measuring means and a stick circuit including a contact of said track relay closed when the section is occupied or said track circuit is open, circuit means including a front contact of said repeater relay connected to said signal to operate the signal to its clear condition, an auxiliary track section located adjacent the first mentioned track section at its end remote from the intersection, said auxiliary track section having a track circuit including a series and a multiple track relay, another relay having pole changing contacts and provided with an energizing circuit including in series a front contact of said series track relay and a back contact of said multiple track relay, and said pole changing contacts interposed in said stick circuit of said repeater relay to release the repeater relay when a train approaches the intersection subsequent to an operation of the time measuring means.

5. In control apparatus for a highway crossing signal operable to a clear and a warning condition and located adjacent the intersection of a highway and a railway track, the combination comprising, a track circuit for a track section formed in the railway track adjacent one side of the intersection and having a track relay which is picked up or released according as the track section is unoccupied or occupied by a train, means including a contact of said track relay having connections to said signal to operate the signal to its clear or warning condition according as the track relay is picked up or released, a time element relay having a contact biased to an initial position and operated away from the initial position to a closed position only when the relay is energized a predetermined time interval, an energizing

circuit connected to said time element relay and including a current source and a contact of said track relay closed when the relay is released, a direct current neutral repeater relay having a pickup circuit including said time element relay contact when closed and with a stick circuit including a contact of said track relay closed when the relay is released, circuit means including a front contact of said repeater relay connected to said signal to operate the signal to its clear condition, an auxiliary track section formed in the track adjacent the end of the first mentioned track section remote from the intersection and provided with a track circuit having a track relay responsive to a train occupying the auxiliary section, and circuit means including contacts of said track relay of the auxiliary section track circuit and having contacts interposed in said stick circuit of said repeater relay to pole change said stick circuit when a train enters said auxiliary section whereby said repeater relay is released and said signal operated to its warning condition when a train approaches the intersection subsequent to the signal having been operated to its clear condition due to an operation of the time element relay.

6. In control apparatus for a highway crossing signal operable to a clear and a warning position and located adjacent the intersection of a railway track and a highway, the combination comprising, a first and a second control track section formed in said track adjacent opposite sides of the intersection, a positive operating section formed in said track at said intersection, a track circuit including a track relay provided for each of said track sections, two directional relays one energized when the track relay of said first control section is released and the other energized when the track relay of said second control section is released, a time element relay having a first and a second contact operable to a closed position only when that relay is energized a predetermined time interval, circuit means connected to said time element relay to energize the relay and having two alternate circuit paths one of which includes a back contact of the track relay of said first control section and the other of which paths includes a back contact of the track relay of said second control section, two repeater relays, one said repeater relay having a pickup circuit including said first contact of the time element relay and a stick circuit including a back contact of the track relay of said first control section, said second repeater relay having a pickup circuit including said second contact of said time element relay and a stick circuit including a back contact of the track relay of said second control section, a signal control relay; a circuit network connected to said signal control relay to energize the relay and having three alternate circuit paths, a first path including in series a front contact of the track relay of said first and second control sections and a front contact of the track relay of said positive operating section, a second path including in series a front contact of said first repeater relay and a front contact of the track relay of said second control section and a front contact of the track relay of said positive operating section, and a third path including in series a front contact of said second repeater relay and a front contact of the track relay of the first control section and a front contact of the track relay of said positive operating section; and an operating circuit connected to said signal and including a front contact of said signal control relay.

7. In control apparatus for a highway crossing signal operable to a clear and a warning position and located adjacent the intersection of a railway track and a highway, the combination comprising, a first and a second control track section formed in said track adjacent opposite sides of the intersection, a positive operating section formed in said track at said intersection, a track circuit including a track relay provided for each of said track sections, a time measuring means including a stick relay and a time element relay, said time element relay being biased to an initial position closing a check contact and operable when energized to close a front contact only after a selected time interval, said stick relay being provided with alternate circuits one of which includes in series a back contact of the track relay of said first control section and said check contact and the other of which alternate circuits includes in series a back contact of the track relay of said second control section and said check contact, said stick relay having a front contact which shunts said check contact in said alternate circuits, said time element relay being provided with an energizing circuit including a front contact of said stick relay, a signal control relay, a circuit network including a front contact of said signal control relay having connection to said signal for operating the signal to its clear position, a first circuit means including in series a front contact of the track relays of each of said first and second control sections and said positive operating section connected to said signal control relay to energize that relay, and a second circuit means including said front contact of said time element relay connected to said signal control relay to energize that relay.

References Cited in the file of this patent

UNITED STATES PATENTS

2,097,827	Young	Nov. 2, 1937
2,220,484	Jensen	Nov. 5, 1940
2,346,518	Tizzard	Apr. 11, 1944
2,379,209	Allen	June 26, 1945
2,664,499	Muse	Dec. 29, 1953