May 17, 1955 F. R. CATHERS ET AL 2,708,321

TAP SHOE

Filed Sept. 23, 1952

Fig. 1

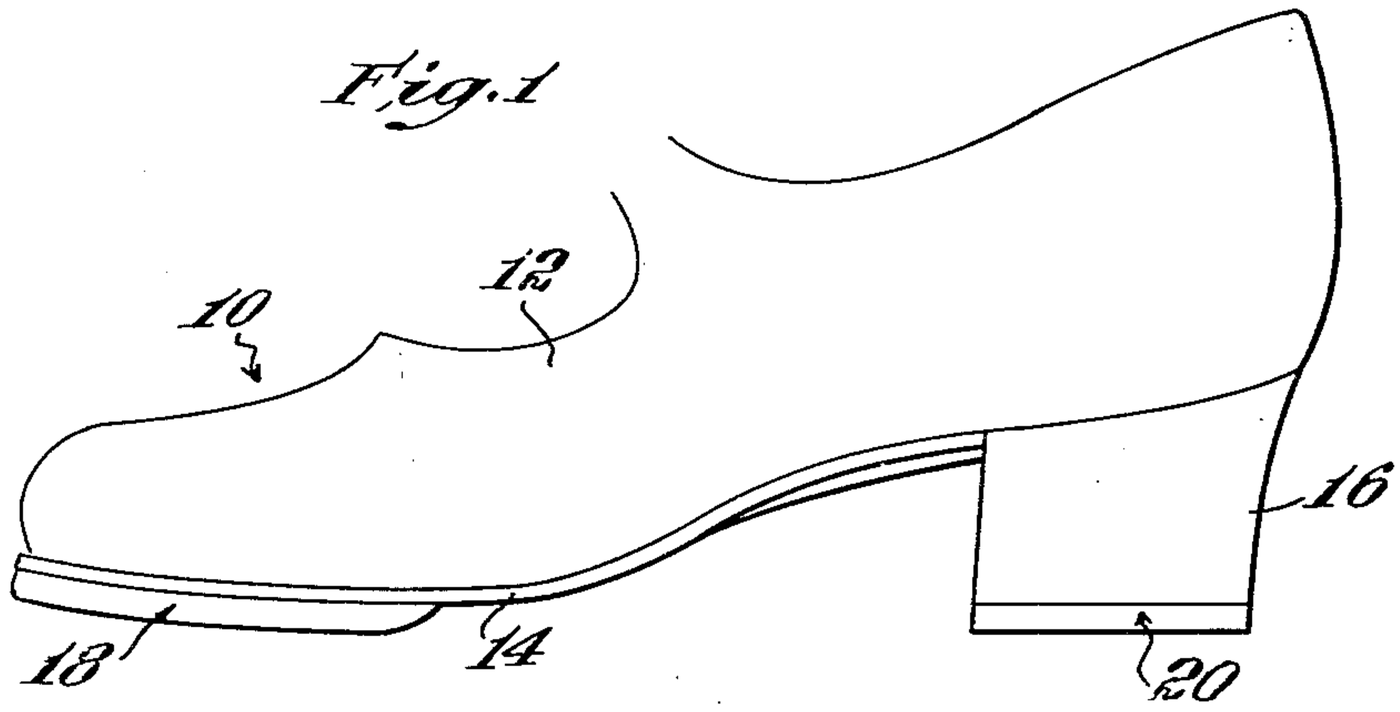

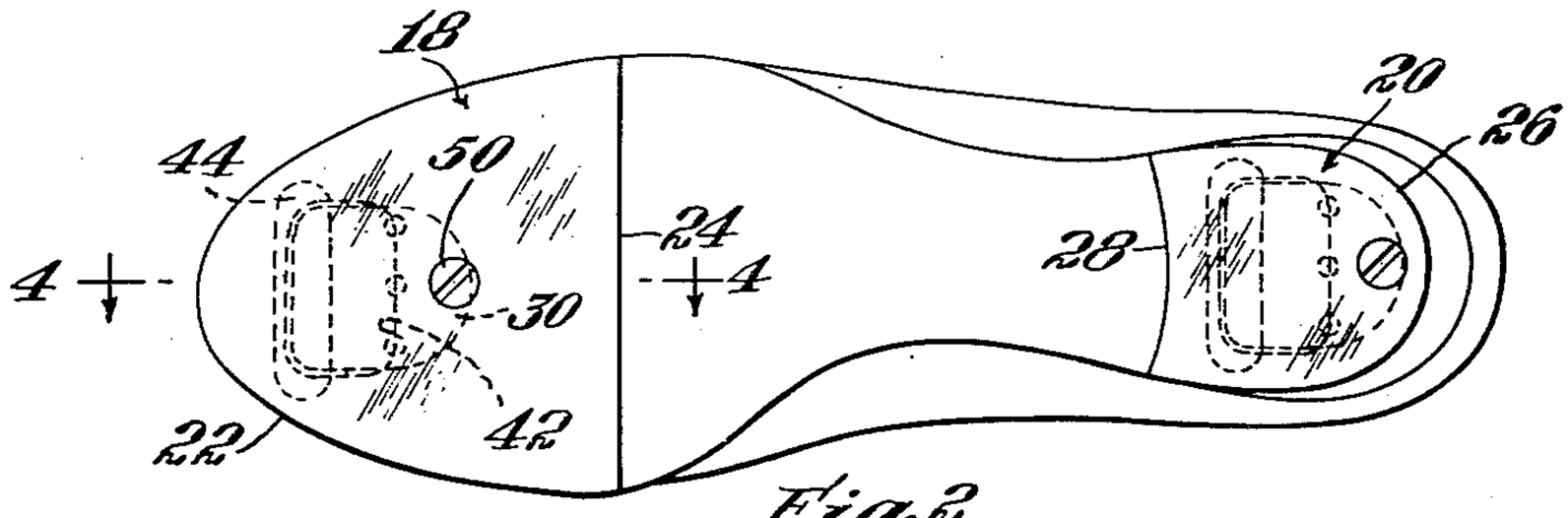

Fig. 2

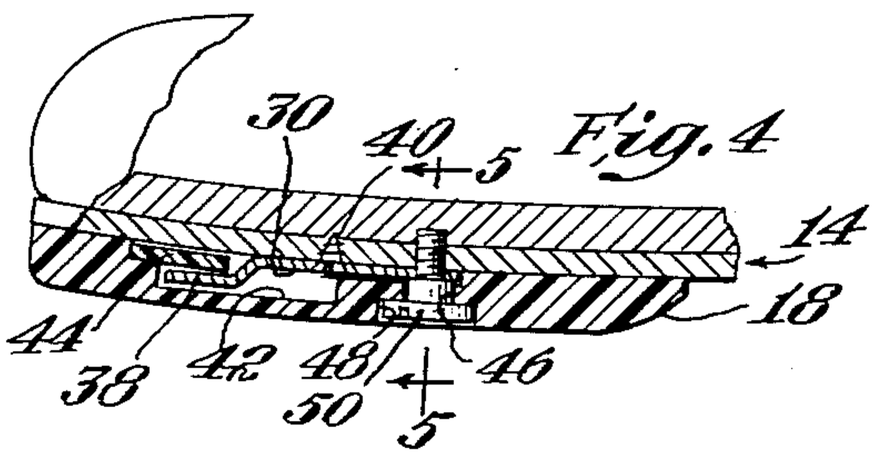

Fig. 4

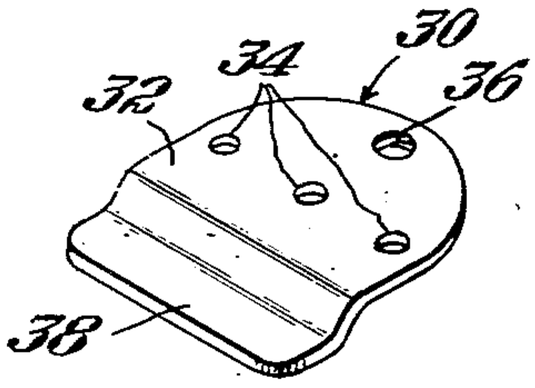

Fig. 3

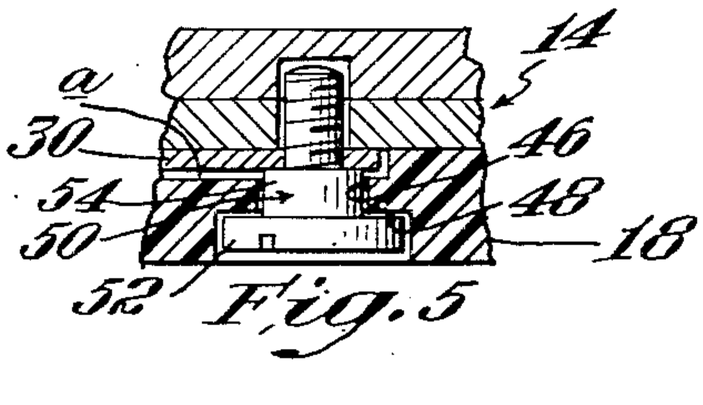

Fig. 5

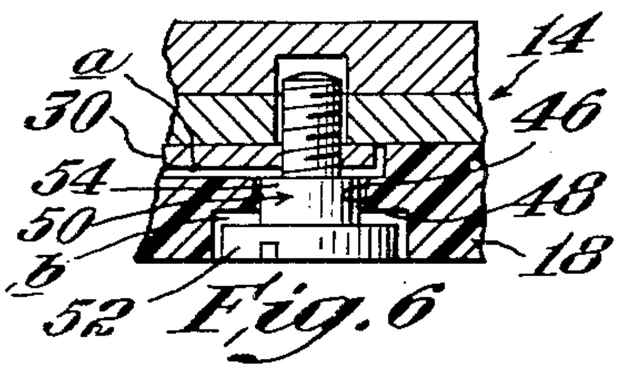

Fig. 6

Inventors
Frank R. Cathers
George A. Winterburn
by Poletti, Cushman & Grover
att'ys.

United States Patent Office

2,708,321

Patented May 17, 1955

2,708,321

TAP SHOE

Frank R. Cathers and George A. Winterburn,
Putnam, Conn.

Application September 23, 1952, Serial No. 311,112

3 Claims. (Cl. 36—8.3)

This invention relates to sound producing taps for attachment to shoes or slippers for tap dancers.

The art of tap dancing depends a good deal upon sound producing elements attached to the bottom of the dancer's shoes for the purpose of creating sound effects which appeal to the audience. Many devices are employed to obtain such sound effects, for example thin metal plates attached to the bottom of the shoe at the toe and heel, small tacks partially driven into the sole and heel along their edges and pieces of thin wood tightly or loosely attached to the sole. The most satisfying and musical sound is the non-metallic staccato-like click obtained by attaching a thin maple wood tap to the shoe bottom.

An object of this invention is to provide a sound producing tap plate for attachment to the bottom of a dancer's shoe which will reproduce the sound of the classic maple wood tap, which can be molded in one piece hence avoiding the expensive hand tooling of a piece of maple wood to proper shape, which can easily be attached to the shoe bottom and which can be adjusted to effect a whole gamut of sound effects varying from one extreme in which the tap is substantially fast to the bottom of the sole so that a tight sound effect is produced, to the other extreme in which the tap is very loosely attached to the bottom so that a correspondingly loose sound effect is produced.

The tap shoe device according to the invention comprises anchoring means in the form of a plate fastened to the bottom of the shoe and having a threaded hole and a downwardly offset tongue, combined with a tap plate having a hole which is adapted to register with the hole in the anchor plate, and a lip beneath which the tongue of the anchor plate is loosely engaged. In order to provide surface contact between the tap and shoe bottom, a recess is formed in the inner surface of the tap plate to accommodate the anchor plate and its tongue, the recess being large enough to permit movement of the tap plate with reference to the anchor plate. A screw is set into the hole in the sound producing tap plate and threaded into the anchor plate to make tap plate substantially tight against the bottom of the shoe when turned up tightly but to hold the plate loosely against the bottom if backed off.

As herein illustrated the sound producing tap plate is comprised of a piece of molded, plastic nylon being preferred because it reproduces the sound of the classic maplewood tap so accurately that even the skilled professional can hardly detect the difference.

Other objects, aspects and features will appear, in addition to those contained in the above statement of the nature and substance including some of the objects of the invention, from the following description of a typical embodiment illustrating its novel characteristics. This description refers to a drawing in which:

Figs. 1 and 2 are side elevation and bottom view respectively of a shoe with a tap according to the invention fastened to the forepart of the sole and to the heel;

Fig. 3 is an axonometric view of a metal anchoring plate for attaching the taps in place;

Fig. 4 is a vertical longitudinal section taken on the

line 4—4 of Fig. 2 showing the tap plate fastened to the shoe through the intermediary of the anchor plate;

Fig. 5 is a greatly enlarged vertical section on the line 5—5 of Fig. 4 showing the adjusting screw drawn up tight against the anchoring plate; and

Fig. 6 is a section similar to Fig. 5 but showing the adjusting screw slacked off to give the loose sound effect.

Fig. 1 shows a conventional shoe 10 having an upper 12, outsole 14 and heel 16. Sound producing tap plates 18 and 20 constructed according to the invention are attached to the bottom of the shoe, the tap plate 18 being fastened to the forepart of the sole and the plate 20 to the heel. As will be seen by reference to Fig. 2, the tap 18 is substantially coextensive with the tip end of the forepart of the sole, having an edge 22 curved to follow the curvature of the edge of the forepart of the sole including the tip, and a straight rear edge 24 extending transversely of the sole substantially at the ball line. The heel tap 20 corresponds in shape to the heel, having a curved edge 26 which follows the curvature of the side and rear parts of the heel, and an inner edge 28 corresponding in shape to the breast of the heel. The toe and heel taps 18 and 20 are attached to the bottom of the shoe, that is to the forepart of the sole and to the heel respectively, in the same manner and hence the following description will be confined to the toe tap and its attaching means, everything being said with regard to it applying equally well to the heel tap and its attaching means.

The sound producing tap plate 18 or 20 is attached to the bottom by an anchoring plate 30 (Fig. 3) interposed between it and the bottom. As shown in Fig. 3, the anchor plate consists of a metal sheet 32 having about mid-way of its length three screw holes 34 spaced transversely thereof. At the rear end of the plate there is a threaded hole 36 and at its forward end a downwardly offset tongue 38. The anchor plate is attached to the shoe bottom with the body portion 32 fast against the sole by means of screws 40 placed through the holes 34 and in this position the tongue 38 is downwardly offset from the sole and projects forwardly toward the tip of the shoe, as shown in Fig. 4.

The sound producing tap plates proper, namely parts 18 and 20, are molded so as to provide means for interlocking engagement with the tongue 38. As shown in Figs. 2 and 4, the upper surface of the tap plate has a recess 42 of sufficient size and depth to accommodate the anchor plate 30 so that the upper surface of the tap plate will lie in surface to surface contact with the bottom of the shoe. Preferably, the upper surface of the tap plate is contoured so as to complement the surface of the shoe bottom. Across the forward end of the recess 42 a lip spaced from the bottom of the recess is provided by fastening a thin strip 44 transversely of the forward end of the recess, this strip being set into the substance of the tap plate so as to be flush with the inner surface of the latter. To this end the margin of the forward end of the recess can be recessed just enough to receive the thickness of the strip 44. While the strip 44 is shown to be a separate molded piece fast to the plate it may be an integral part of the molded plate 18. The lip being spaced above the bottom of the recess 42, the tongue 38 can be engaged between the strip 44 and the bottom of the recess so as loosely to lock the forward end of the tap plate to the bottom of the shoe. It is to be noted that the space between the strip 44 and the bottom of the recess is vertically deeper than the thickness of the tongue 38 thus permitting come and go perpendicular to the bottom and that this space is also wider than the tongue thus permitting lateral movement.

The rear part of the sound producing tap is anchored to the shoe bottom by an adjustable screw 50. To this

end the tap plate has a hole 46 which registers with the above-described hole 36 of the metal anchor plate 30. The hole 46 is counterbored to provide an enlarged recess 48 to receive the head 52 of the screw 50 placed through it and threaded into the tapped hole 36 of the anchor plate 30. In order to provide for adjustability the head 52 of the screw 50 is comparatively large and has a shoulder 54. The head 52 is of less thickness than the depth of the counterbore 48 while the shoulder 54 is of greater length than the hole 46.

If the screw 50 is turned all the way in as shown in Fig. 5 so that the shoulder 54 is brought up tight against the plate 32, the tap plate 18 is held closely clamped against the bottom of the shoe, yet even in this tightened position permitting a limited amount of play as for example represented by the clearance space *a* which is somewhat exaggerated in order to illustrate this condition. This play is very small and when the tap plate is fastened to the bottom in this position it will give the so called tight sound effect.

If a loose sound effect is desired the screw is backed off as shown in Fig. 6 so that its outer face is substantially flush with the tap plate whereupon the play between the tap plate and the anchor plate 30 will be materially increased as illustrated in Fig. 6 by clearance space *b*. The tap plate can be adjusted to a variety of intermediate positions between that shown in Figs. 5 and 6, all of which result in slightly different sound effects. The shoulder 54 and the head 52 are slightly smaller in diameter than the hole 46 and the counterbore 48 respectively, so that play is permitted. As thus clamped to the shoe the sound producing tap plate 18 or 20 is free to come and go a limited amount from the bottom of the shoe, that is perpendicular thereto, but also to move laterally from side to side, longitudinally from front to back, and to tilt, that is to rock slightly longitudinally and transversely.

As mentioned above, the sound producing tap plate 20 associated with the heel 16 is of smaller size and shape as plate 18, but is mounted in exactly the same way and hence need not be described further.

The sound producing tap plate described herein is preferably molded of nylon plastic and as such as heretofore stated produces with great fidelity the sound of the classic maplewood tap. It is to be understood, however, that the mode of attaching the tap plate is not necessarily confined to a tap plate molded of nylon but that it could be used with any kind of tap plate made of a moldable substance or tooled of wood or metal.

It should be understood that the present disclosure is for the purpose of illustration only and that this invention includes all modifications and equivalents which fall within the scope of the appended claims.

We claim:

1. A tap for attachment to dancing shoes comprising an anchor plate, means for fastening the anchor plate directly to the shoe bottom, a sound producing plate having an outer tap surface and an inner shoe bottom engaging surface, the latter having a shallow recess to accommodate the anchor plate so that the inner surface marginally of the recess has direct contact with the shoe bottom, and interlocking elements carried by the anchor plate and sound producing plate for fastening the sound producing plate through the intermediary of the anchor plate to the bottom of the shoe.

2. A tap for attachment to dancing shoes comprising an anchor plate and a sound producing plate, means for fixedly fastening the anchor plate directly to the shoe bottom, interengaging means carried by the anchor plate and sound producing plate loosely holding the sound producing plate against the bottom through the intermediary of the anchor plate, and a screw extending loosely through said sound producing plate, said screw being threaded into and engaging the anchor plate to prevent disengagement of said interengaging means.

3. A tap for attachment to dancing shoes comprising an anchor plate and a sound producing plate, means for fastening the anchor plate directly to the shoe bottom, said anchor plate and said sound producing plate having registering holes, the hole in the anchor plate being threaded and that in the sound producing plate being counterbored, a tongue on the anchor plate downwardly offset from the bottom of the shoe, a recess in the sound producing plate of sufficient size to accommodate the anchor plate, said recess having a lip spaced from its bottom and loosely engaging said tongue of the anchor plate, and a screw inserted into said threaded hole of the anchor plate through said counterbored hole of the sound producing plate.

No references cited.