April 20, 1954 A. M. ZETH 2,676,216

GROUND SWITCH WITH TWISTING CONTACT

Filed July 21, 1951 3 Sheets-Sheet 1

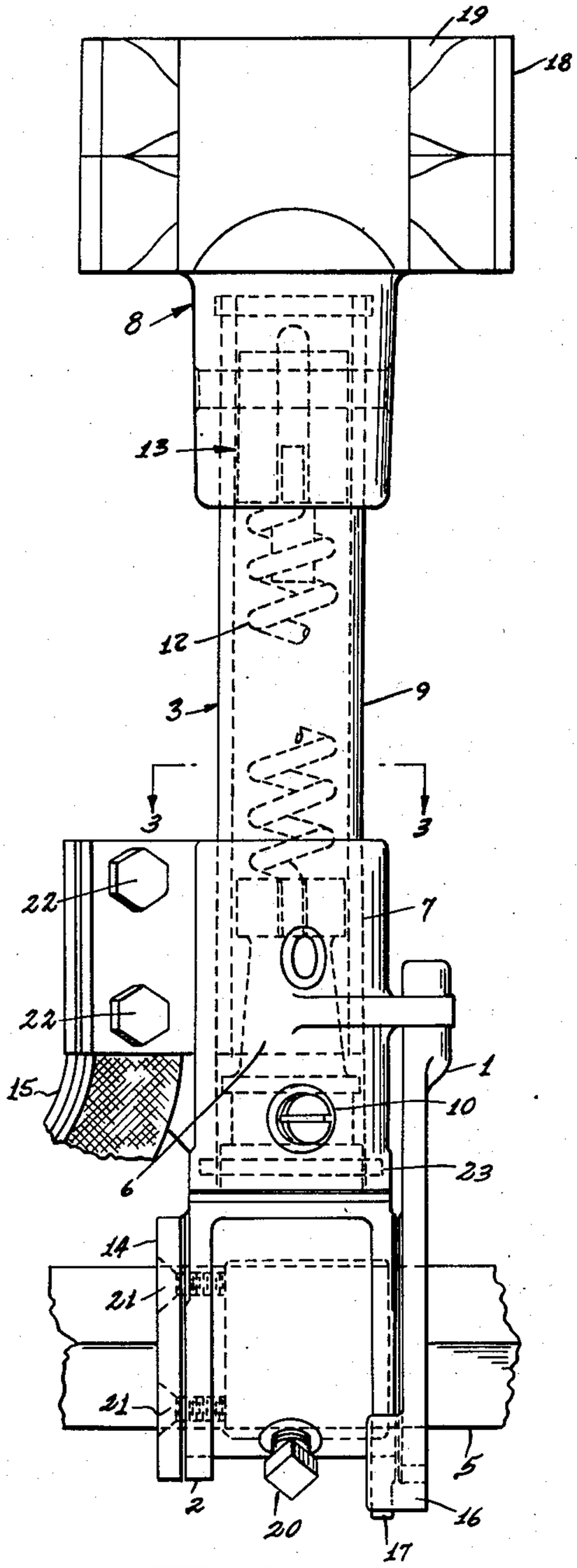

FIG. 1

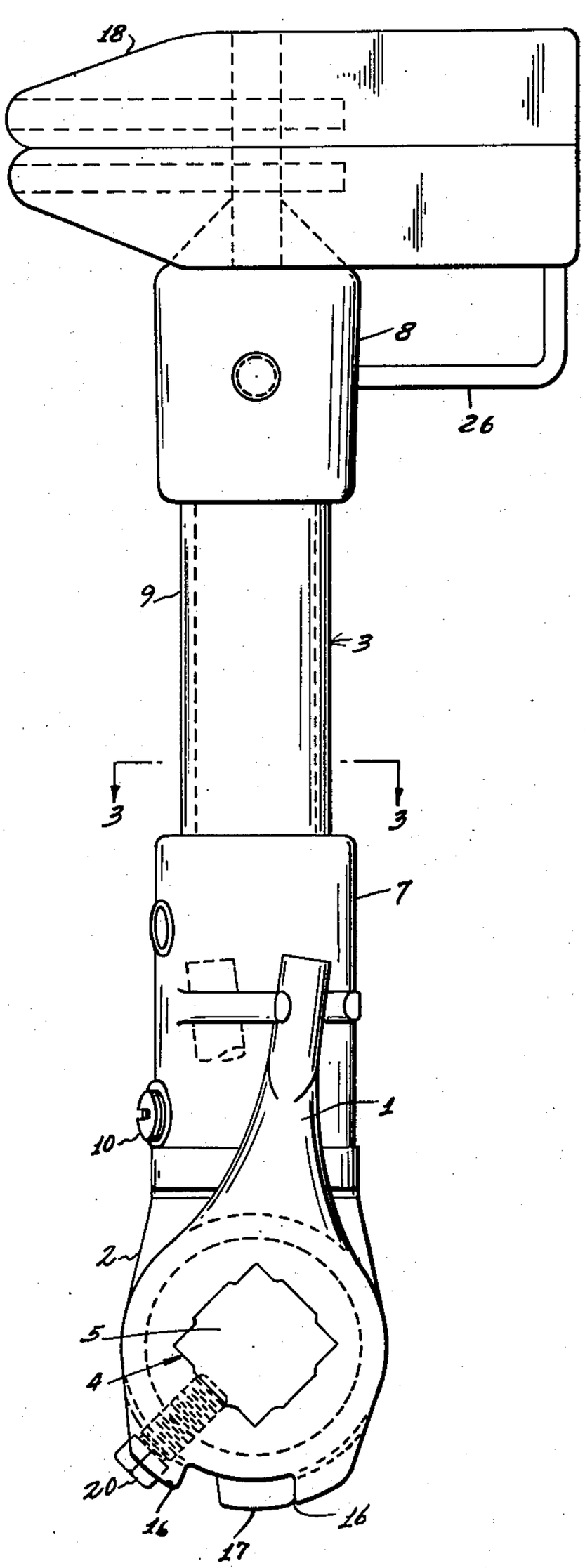

FIG. 2

INVENTOR.
ARTHUR M. ZETH

BY
Ostrolenk & Faber

ATTORNEYS

April 20, 1954 A. M. ZETH 2,676,216

GROUND SWITCH WITH TWISTING CONTACT

Filed July 21, 1951 3 Sheets-Sheet 2

FIG. 5.

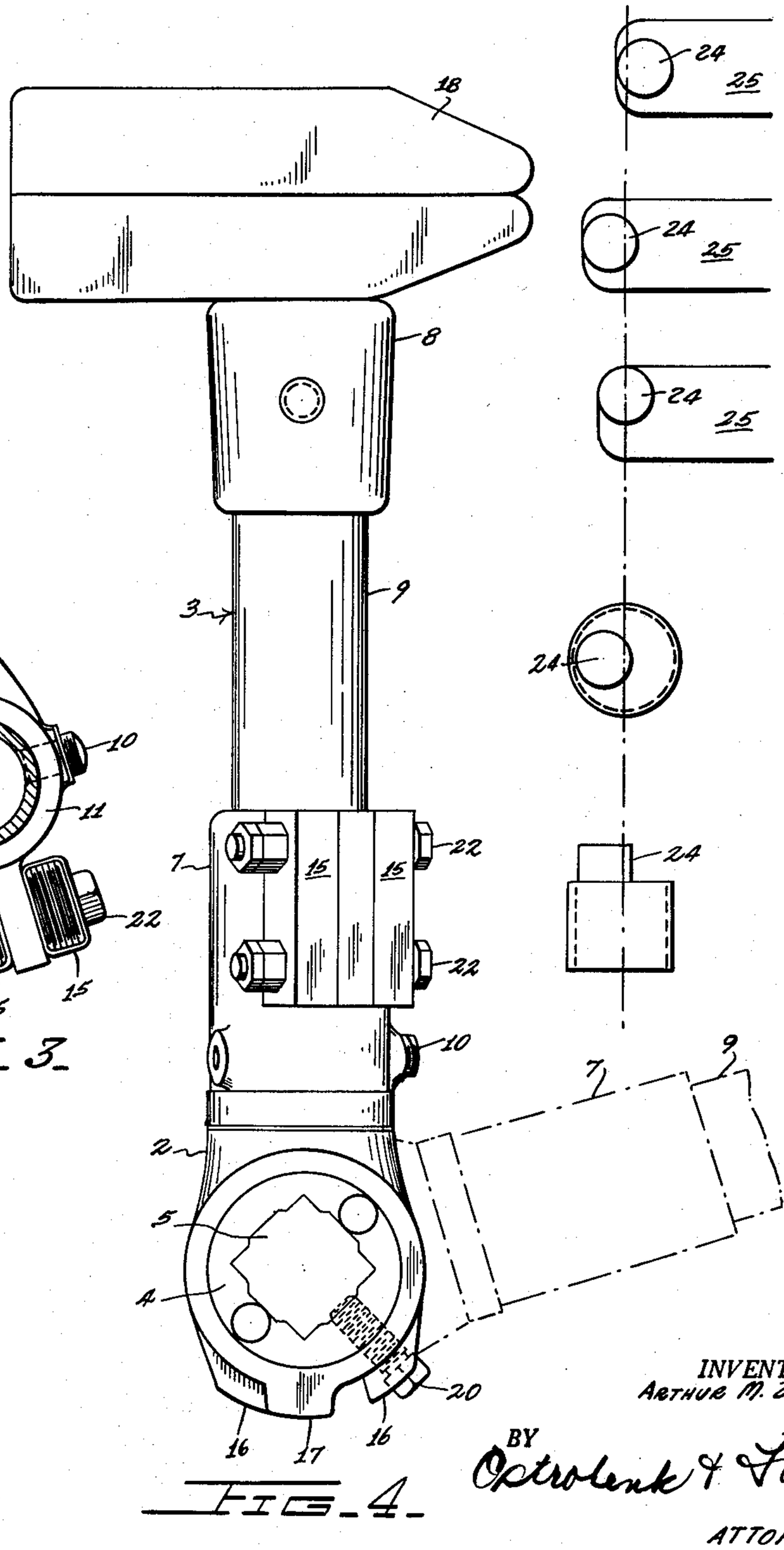

FIG. 3.

FIG. 4.

INVENTOR.
ARTHUR M. ZETH

BY Ostrolenk & Faber

ATTORNEYS

April 20, 1954 A. M. ZETH 2,676,216

GROUND SWITCH WITH TWISTING CONTACT

Filed July 21, 1951 3 Sheets-Sheet 3

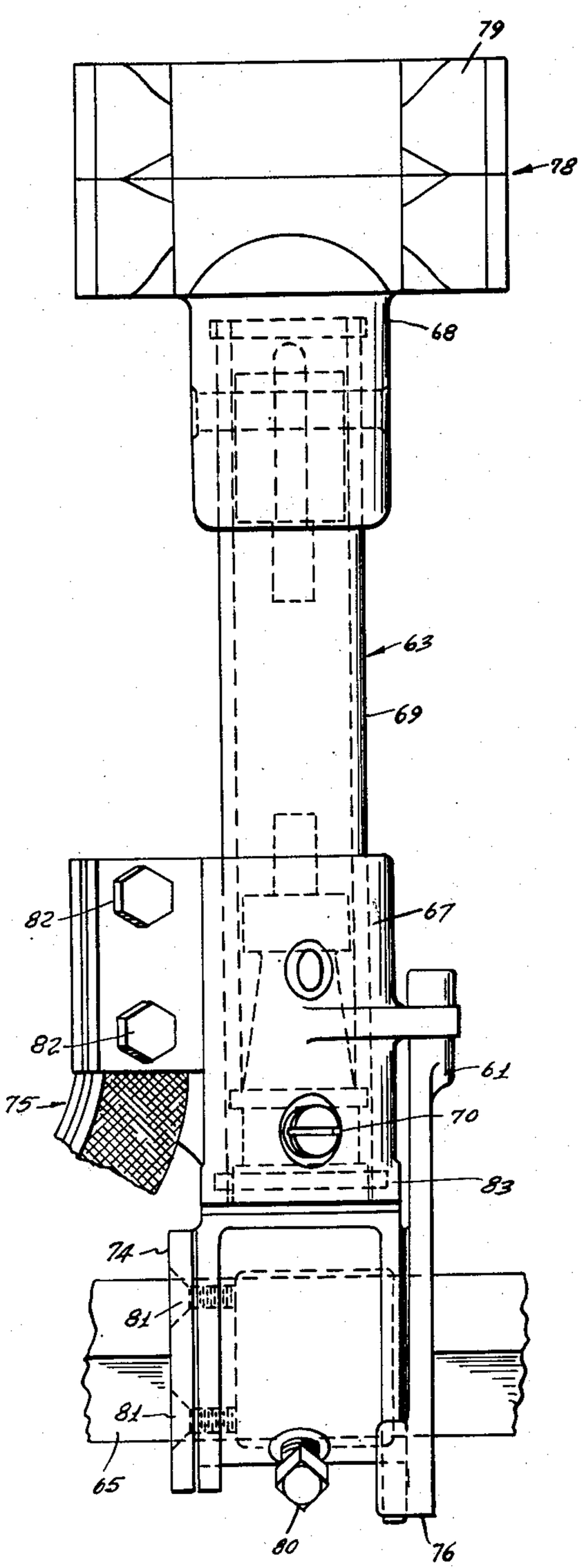

FIG. 6

INVENTOR.
ARTHUR M. ZETH

BY
Ostrolenk & Faber

ATTORNEYS

Patented Apr. 20, 1954 2,676,216

UNITED STATES PATENT OFFICE

2,676,216

GROUND SWITCH WITH TWISTING CONTACT

Arthur M. Zeth, Greensburg, Pa., assignor, by mesne assignments, to I-T-E Circuit Breaker Company, Philadelphia, Pa., a corporation of Pennsylvania

Application July 21, 1951, Serial No. 237,932

1 Claim. (Cl. 200—48)

1

My present invention relates to ground switches adapted to establish a contact between an external frame and the point to be grounded. More particularly, this invention relates to ground switches with a blade which twists into and out of contact.

For slam-in type ground switches, high operating efforts are needed especially at the time of opening when the high frictional load produced by contact pressure has to be overcome without suitable mechanical advantage. This condition is also present at the closing operation but to a lesser degree due to the inertia of the moving blades.

The present invention has for its primary object a ground switch which makes its contact by rotating the blade after the blade has been moved radially into proper position.

Another object is a ground switch which releases its contact by rotating the blade, letting the blade be moved radially away from the closed position.

Another object is a ground switch which rotates out of contact only.

These and other objects and advantages of the invention will be apparent from the following description when taken with the accompanying drawings in which:

Figure 1 is a front view of the ground switch with twisting contact of this invention.

Figure 2 is a side view of the ground switch of Figure 1 showing the blade actuator's positions.

Figure 3 is a view taken from line 3—3 of Figure 2 looking in the direction of the arrows showing the annular slot on the shaft of the blade hinge.

Figure 4 is another side view of the switch of Figure 1 showing the switch in open and closed position.

Figure 5 shows alternate means of limiting the rotation of the blade of the switch of this invention.

Figure 6 is a front view of another embodiment of this invention.

Referring first to Figure 1, where the switch is shown in closed position, the switch assembly consists of the following major parts: blade actuator 1, blade hinge 2, blade assembly 3.

Referring to Figures 1 and 2, the blade actuator 1 has a square hole 4 through which passes a square shaft 5 on which the switch blade assembly 3 is mounted, the square shaft 5 being mounted on bearings which attach to the base of the air switch. The blade hinge 2 is a pintle casting which rotates between the limits on the

2

blade actuator 1 and carries the switch blade assembly 3 on its extending shaft 6.

The blade assembly 3 is made up of the socket 7, the upper tube blade 9 and the beavertail blade contact end 8. The blade assembly is held in position by the guide screw 10, shown in Figure 3, which engages the annular slot 11 on the shaft of the blade hinge 6. Packing ring 23 is located at the bottom part of the socket. The blade assembly 3 also contains a torsion spring 12 housed in tube 9, the spring 12 being connected to the shaft of the blade hinge 6 at one end and through an attachment block 13 to the blade at the other end.

The switch assembly is held together as a unit by the end plate 14 and cap screws 21. The current flows from the jaw contacts 19 through the beavertail blade contact 8, the copper blade tube 9, the blade socket 7 and shunts 15 into the grounding conductors. Shunts 15 are held together and to the switch by bolt and nut 22.

At assembly, the torsion spring 12 is given an initial loading equal to at least part of the moment of the blade 9, the direction of effort produced by the spring 12 being such that as the blade 9 is twisted to engage the jaw contacts 19 the spring 12 is wound up further. Radial motion of the blade 9 and blade hinge 2 around the actuator 1 is limited to the travel of the stop lug 17 between the stops 16 shown in Figure 2.

The entire blade assembly 3 slides onto the square shaft 5 and is positioned with the contact centrally located in the jaw 18. The square head steel set screw 20 is then tightened against the square shaft 5 to hold the adjustment with the blade 3 in its open position. Rotation of the square shaft 5 by an outside operating mechanism will move the blade 3 vertically into the opening of the grounding jaw 18. The movement of the square shaft 5 is transmitted to the blade 3 by the crank pin of the actuator 1 to the slot in the blade socket 7.

During blade lift the contact end 8 is at a predetermined angle so that it will enter the ground jaw 18 freely not making contact with it.

Effort to lift the blade 3 is transmitted through the torsion spring 12 which holds the blade 3 at a predetermined angle for free entrance into the complementary contact or jaw 18. When the blade 3 strikes the stop 26 on the jaw 18, radial or lifting motion ceases and the crank arm 1 rotates the contact into fully closed position.

When it is desired to open the switch, rotation of the blade 3 occurs first to release the contact

pressure; then the blade 3 is lowered to its open position.

As an alternate construction, the square shaft may be replaced by a round shaft and the blade actuator held in position by a key.

An alternate means of limiting the rotation of the blades is shown in Figure 5 where a screw with eccentric end 24 is used for adjustment of the rotating angle. A partial slot 25 of greater length than actually required is produced in the shaft 6 of the blade hinge 2. Adjustment is obtained by means of the steel set screw 24 with an eccentric projection which engages in the slot 25. This adjustment is necessary only on the opening side.

Another means of operation is obtained by eliminating torsion spring 12 as shown in Figure 6.

In Figure 6 the grounding switch is shown in the closed position. During the opening operation, the blade 63 first rotates around its axis since the friction of contact pressure between the beavertail blade contact end 68 and the jaw contacts 79 allows the twisting movement to take place until this contact pressure is practically removed.

After this, the blade 63 falls naturally and by a small amount between the stops 76 and can be lowered by the operator by rotation of its shaft 65 until the full open position is reached.

During the closing operation instead the blade 63 first rotates axially between the limit stops 76, then raises and slams into contact with the contacts 79 of jaw 78.

In the foregoing I have described my invention solely in connection with specific illustrative embodiments thereof. Since many variations and modifications of my invention will now be obvious to those skilled in the art, I prefer to be bound not by the specific disclosures herein contained but only by the appended claim.

I claim:

A ground switch for establishing contact between a point to be grounded and an external frame comprising a contact arm, a complementary contact, a shaft, a crank pin, a torsion spring,

a socket, and a blade hinge; said contact arm being mounted on said shaft and comprising a hollow tube arm being radially and axially rotatable, said shaft being axially rotatable and mounted perpendicular to said contact arm; the axis of said radial rotation of said contact arm coinciding with and being the same as the axis of rotation of said shaft on which said contact arm is mounted; said crank pin mounted on and movable with said shaft, said contact arm being engageable with said complementary contact, said blade hinge positioned within said hollow tube arm of said contact arm, a packing ring located between said blade hinge and contact arm to weather seal the internal parts thereof, said torsion spring positioned within said hollow tube of said contact arm and having one end attached to said blade hinge and the other end attached to the end of said contact arm which makes engagement with said complementary contact, said torsion spring biasing said contact arm for free entrance into said complementary contacts, said crank pin releasably engaging said socket, said socket positioned concentric with said contact arm and said blade hinge, a guide screw secured to said socket and extending through said contact arm to said blade hinge located internally thereof, said guide screw positioned in an angular slot in said blade hinge, said crank pin axially rotating said socket and contact arm without benefit of said blade hinge, said crank pin axially rotating said contact arm into contact engagement with said complementary contact at the end of radial motion, said angular slot of said blade hinge and said guide screw limiting motion of said crank pin.

References Cited in the file of this patent

UNITED STATES PATENTS

Number	Name	Date
1,793,177	Koppitz	Feb. 17, 1931
2,303,119	Froland	Nov. 24, 1942
2,359,056	Shaw	Sept. 26, 1944
2,368,462	Garrison	Jan. 30, 1945