Dec. 22, 1953 H. E. WUNDERLICH 2,663,243

AIR PICKUP AND SUCTION DEVICE

Filed July 30, 1951 2 Sheets-Sheet 1

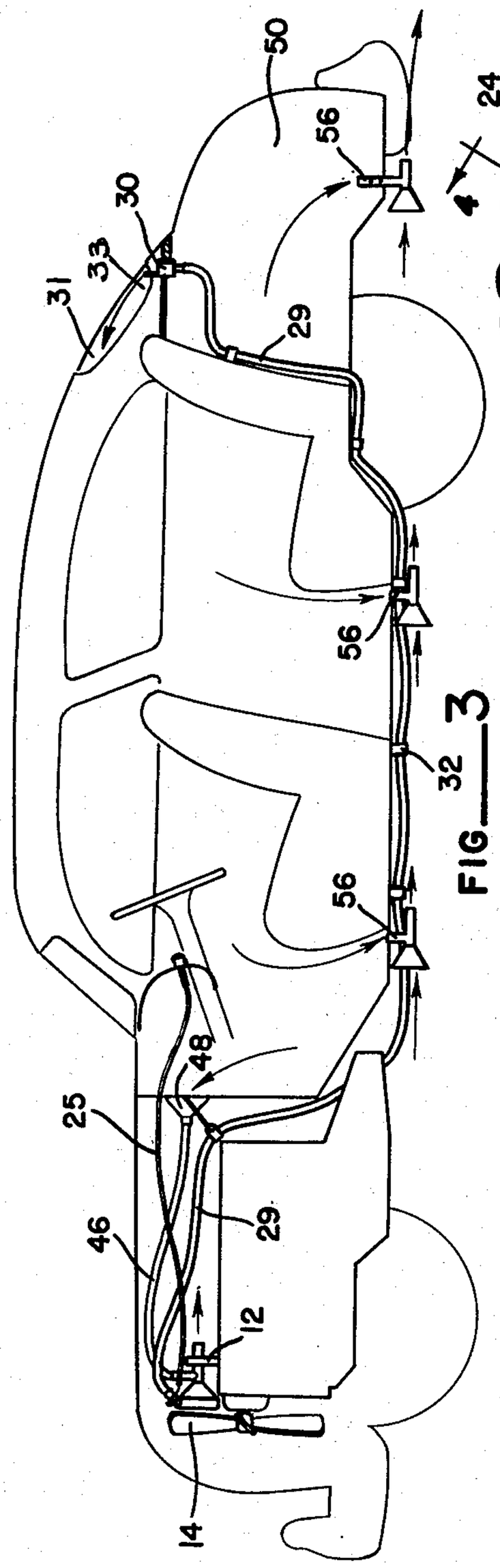

FIG. 3

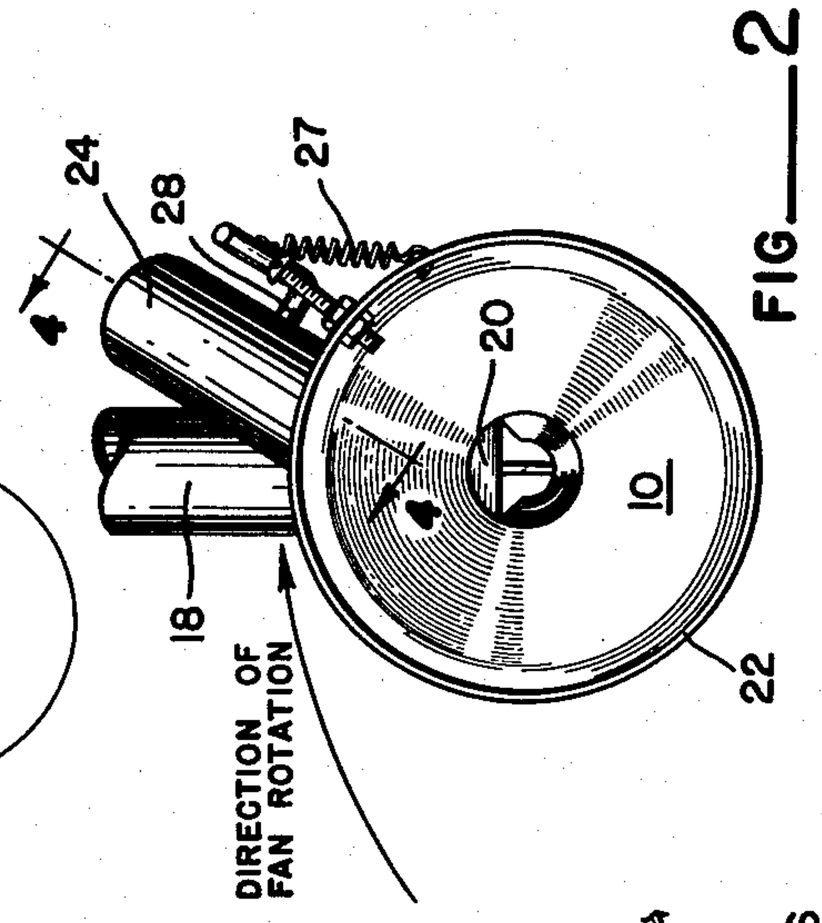

FIG. 2

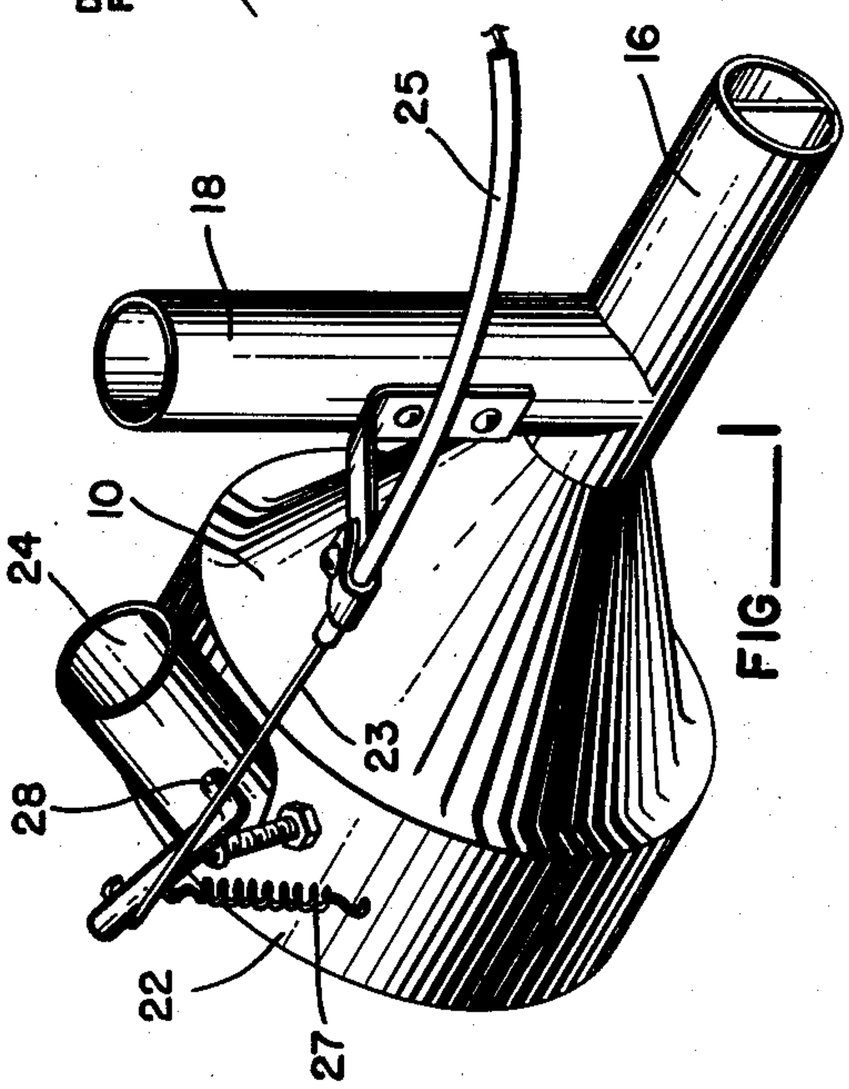

FIG. 1

HENRY E. WUNDERLICH
Inventor

By Smith & Tuck

Attorneys

Dec. 22, 1953 H. E. WUNDERLICH 2,663,243

AIR PICKUP AND SUCTION DEVICE

Filed July 30, 1951 2 Sheets-Sheet 2

FIG 4

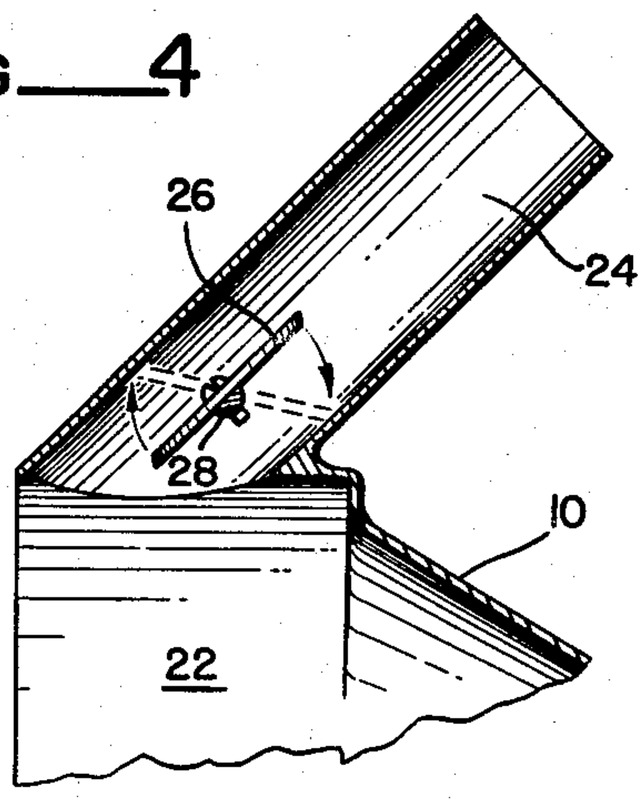

FIG 7

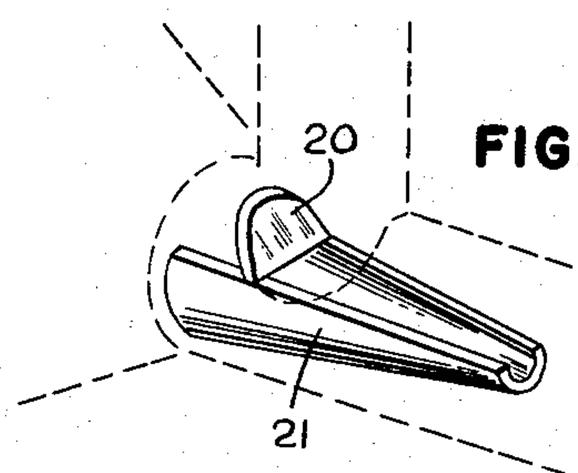

FIG 5

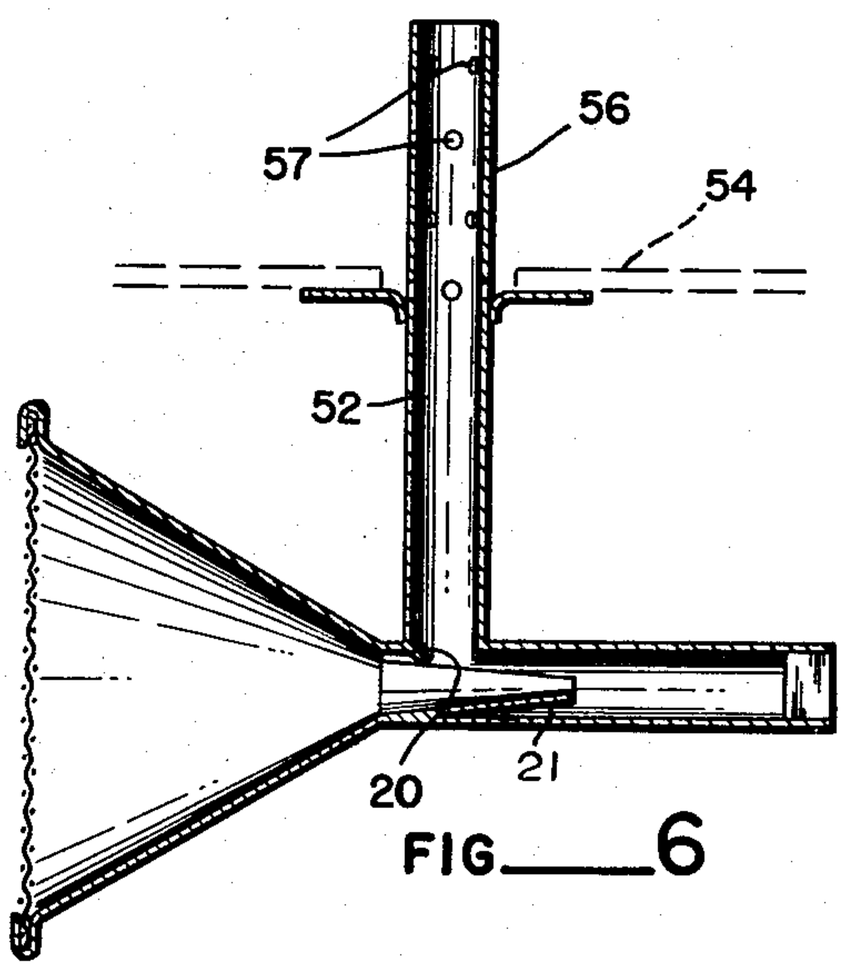

FIG 6

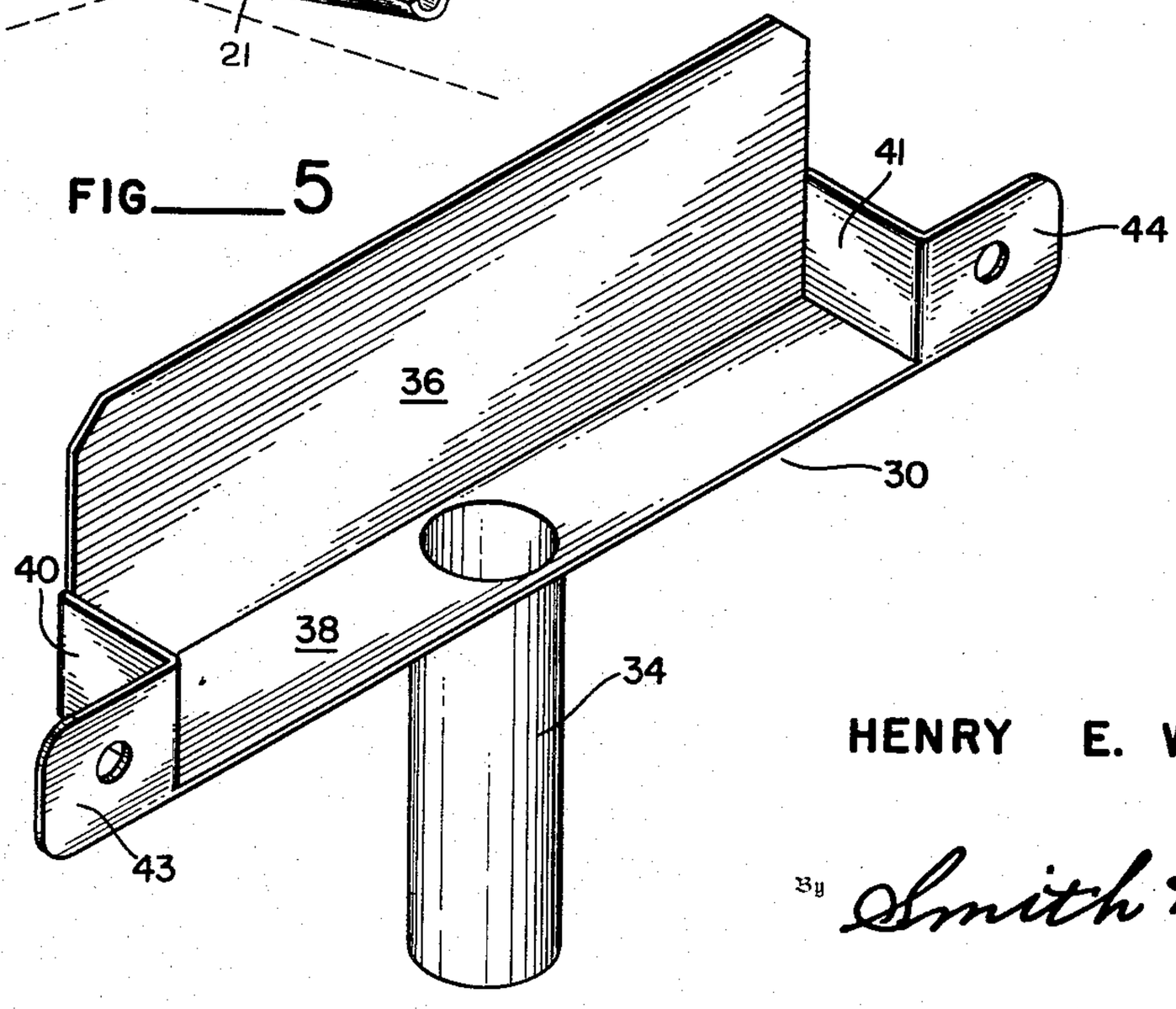

HENRY E. WUNDERLICH
Inventor

By Smith & Tuck

Attorneys

Patented Dec. 22, 1953

2,663,243

UNITED STATES PATENT OFFICE

2,663,243

AIR PICKUP AND SUCTION DEVICE

Henry E. Wunderlich, Seattle, Wash.

Application July 30, 1951, Serial No. 239,318

3 Claims. (Cl. 98—2)

1

This present invention consists of a plurality of devices which make it possible to provide a ventilating system for the various types of cars employing a wide range of closed bodies. The equipment provides first for the pickup of air, preferably from the cooling fan of the automobile, and carries this air by suitable tubing to a rear point in the car body. The same pickup device, in the nature of a funnel, which collects air under pressure for the supply of fresh air to the car, also creates a powerful suction; this is led by suitable tubing to a point preferably under the dash of the car so that a complete ventilating system is provided with fresh air introduced into the car and with a certain amount exhausted from the car body. This makes it possible to provide a ventilating means for any type of closed car wherein it will not be necessary to open the windows, or other ventilating devices, in order to ventilate the car body properly as far as the supply of an adequate amount of fresh oxygen-bearing air is concerned.

This present invention employs equipment somewhat similar to that shown in my copending application Serial No. 224,692. However in my former case it was necessary to provide points for the entrance of air into the car body. This was achieved by use of the normal ventilating means or by lowering slightly one or more of the car windows. With this present equipment, which is the subject matter of this present application, this is no longer necessary although it has been found that a combination of the devices of my copending application and those of this present application provide a very desirable ventilating system for the average closed car.

The present day automobile is resplendent with many devices which add materially to the comfort of the passengers. However, the manufacturers are required to adopt a compromise form of design that will be received favorably in various parts of the country and to endeavor at the same time to keep the customers' purchase price always to the lowest possible level. Many times with this limitation it is not possible to provide adequate ventilation for many parts of the country. Ventilation also becomes an increasingly perplexing problem as the cars begin to age and greater amounts of oil are used by the motors and this in turn is converted into noxious gases, which again, due to the depreciation of the car, find more or less ready access into the car body from gaps that have been opened up through the long period of use. This present equipment is provided to supply a means that will be adaptable to

2

a wide range of climatic conditions and further one that may be added to a car even after the car has been run for some time and the need for thorough eradication of noxious gases, some of which are poisonous, becomes increasingly desirable.

The principal object of my present invention, therefore, is to provide a ventilating means for closed car bodies which will on the one hand eliminate noxious and poisonous gases and further will resupply an adequate amount of oxygen-bearing fresh air so that sufficient ventilation can be obtained without the use of auxiliary ventilation, which is in turn particularly undesirable especially in cold weather, rainy weather, or in conditions where dust is air borne to the extent that it becomes very unpleasant.

A further object of this invention is to provide means whereby air under considerable pressure and relatively high velocity can be introduced into the rear portion of a closed car body.

A further object of this invention is to provide means for the eradication of the lower strata of gases in a car body so as to eliminate the noxious and poisonous gases and prevent their mixing unduly with the incoming fresh air.

A further object of this invention is to provide means that cannot be blocked easily which will remove water vapor and gases from the lower portions of the car body and especially the rear or luggage compartment of an automobile.

A further object of this invention is to provide a ventilating means for closed car bodies which will have a convenient control arrangement so the driver, from his driving position, will have full control of the ventilating means of his car.

Further objects, advantages and capabilities will be apparent from the description and disclosure in the drawings, or may be comprehended or are inherent in the device.

In the drawings:

Figure 1 is a perspective view illustrating the pickup unit of my ventilating means together with the control means employed therewith;

Figure 2 is a front elevation of the device of Figure 1;

Figure 3 is a schematic form of drawing illustrating the preferred emplacement of my various devices employed to complete a ventilating system for automobile bodies;

Figure 4 is a fragmentary cross-sectional view taken along the line 4—4 of Figure 2;

Figure 5 is a perspective view showing the air-discharge device employed with my equipment;

Figure 6 is a typical, longitudinal vertical sec-

tional view through a preferred form of my air and vapor discharge devices; and

Figure 7 is a perspective view showing the throating members of the air pickup device with adjacent parts shown in dotted lines.

Referring more particularly to the disclosure in the drawings, the numeral 10 designates the funnel-like air pickup means which is mounted on a suitable bracket 12 immediately behind and in the drift stream of the cooling fan 14 of the car's motor. The funnel-like portion 10 is provided with an air siphon arrangement formed by the air-discharge tube 16 and the air-suction tube 18. This general arrangement, together with the unique throating arrangement viewed in Figures 2 and 6 in which a Venturi shelf 20 and a generally U-shaped member 21 are employed, is to increase the suction within pipe 18. This general construction is similar to that shown in my copending application to which I have above referred. Disposed around the enlarged end of funnel 10 is an air selector band or cylinder 22. This band prevents the excess air which is driven at relatively high speed by fan 14 from spilling off around the margins of funnel 10 and insures delivery of high velocity air to the car air intake tube 24. This tube is inclined backwardly with respect to the plane of the front of funnel 10 and at the same time is disposed somewhat tangentially with the circle of cylinder 22. These relationships are illustrated quite thoroughly in Figures 1 and 2. As viewed in Figure 2, tube 24 is suitable for use with a fan 14 revolving in a clockwise direction. The slope in both planes of tube 24 has been found to substantially increase the velocity of air through tube 29. Within tube 24 is disposed a suitable valve means as the butterfly valve 26. This valve is disposed for partial rotation upon shaft 25, and it is arranged so that it may be adjusted to shut off entirely the flow of air through tube 24 which it will do when it assumes the dotted line position shown in Figure 4. This closure is desirable under hot or dusty conditions. A conventional flexible wire control is shown having the movable wire 23 and the fixed tube 25; a tension spring 27 insures that valve member 26 will normally be held in its open position. As air pressure is built up within cylinder 22 and is drawn out through pipe 24, it is led by means of a flexible conduit 29 to the rear of the automobile body where it is discharged out through the air discharge nozzle 30. The flexible conduit is suitably supported from the car body, preferably passed under the same, by a plurality of clip members 32.

The air discharge nozzle 30 is provided with a tubular portion 34 to which is connected the flexible conduit 29 and the air discharged therefrom passes upwardly and is directed by deflector 36 against the back rear window 31 of the automobile body. Deflector 36 forms an acute angle with rear window 31 so as together to form a narrow discharge orifice 33 to direct a stream of air against the rear window. In order to insure proper direction of the discharged air, the nozzle is provided with a floor portion 38, end portions 40 and 41 and securing tabs 43 and 44, each of which is pierced with suitable openings so that metal or wood screws, as the construction of the body indicates, may pass therethrough and thus fixedly position the discharge nozzle.

Secured to the air suction tube 18 is a second flexible conduit 46 which is led to a suction opening 48. Thus this one unit, as illustrated in Figures 1 and 2, is capable of projecting a high velocity stream of fresh air into the rear of the automobile body, and at the same time suction arrangement is provided through means of opening 48, conduit 46, and the air suction tube 18, where the air is then passed out through the siphon discharge tube 16.

This ventilating plan provides for a complete ventilating cycle. In other words, warm fresh air is passed into the car body and discharged out through nozzle 30 and stale air is discharged through the suction arrangement of the car. This arrangement is capable of being used by itself and under many conditions satisfies fully the requirements for a ventilating means; however it can normally be greatly assisted, and the workability of the system vastly improved, by employing a plurality of the units shown in Figure 6 and which correspond to a degree to the unit employed in my copending application.

It has been found however for the best all-around result that the pickup device employing the funnel 10 should be of fair size in order that an adequate amount of fresh air will be forced into the car body. This air is driven by considerable force due to the fact that the pickup is made immediately behind the cooling fan, and preferably out near the blade tips of the fan, so that maximum impact is given to the air to the end that it will be moving at maximum speed. Under some conditions it has been found that there is a tendency to build up a certain degree of pressure within the car body and it then becomes desirable to employ units as shown in Figure 6 to draw off the excess air and thus prevent the building up of pressure within the closed body. Units of Figure 6 are preferably made considerably smaller in air handling capacity from the unit of Figure 1 to the end that a plurality of the same may be employed and thus the oil, smoke, carbon dioxide and other gases that have infiltrated into the car, and which normally lie adjacent the floor, can be drawn out and be prevented from mixing with the fresh incoming air so keeping the air within the car, up at breathing level, substantially pure and clean.

It further has been found that a unit made after the showing of Figure 6, employed in the rear or trunk compartment of the car indicated at 50, also will draw off any water vapor that may have collected within the luggage compartment and thus condensation and wetting of baggage and the like in the rear compartment would be entirely avoided. Suction tube 52 so employed is preferably arranged to extend upwardly well above floor 54 so the upwardly extending portion 56 may be pierced with a plurality of openings 57; and if the end of the tube should be covered by baggage or the like there will be adequate openings as 57, some of which should be disposed as at floor level, to provide for the free removal of the water vapor and heavier gases in the rear compartment. The rear compartment usually is a collecting point for the heavier exhaust gases due to its proximity to the discharge of the exhaust and the fact that usually there is a certain degree of vacuum created in it. The various other tubes 56, if they are positioned substantially as shown in Figure 3, can also be extended up above the floor and treated in the same manner with much improvement in their effectiveness.

In portraying the various items making up this present air pickup construction arrangement, adequate means is provided so that a workable system can be employed that will meet the wide range of requirements imposed by the unusual condi-

tions under which automobiles, boats and airplanes must be operated in various parts of our country and during various seasons of the year. With this present pickup it is possible to ventilate fully an automobile, boat or airplane, to completely eradicate all harmful or noxious gases, and to keep the car free of water vapors without employing any of the emergency ventilating means of the car, or having the windows open to assist in ventilating. Further this present unit works independently of, and will not interfere with, the proper functioning of the various types of automobile body heaters now being used so generally. These devices have proven very useful in ventilating the boxed-in motors as now generally employed on pleasure boats and this greatly reduces the danger of fire or explosion incidental thereto.

It is believed that it will be clearly apparent from the above description and the disclosure in the drawings that the invention comprehends a novel construction of an air pickup and suction device.

What I claim is:

1. A ventilating system in an automobile activated by the engine fan and discharging air below the rear window and picking up air below the dashboard, comprising: a funnel shaped member disposed behind said engine fan and directed toward said fan to pick up air therefrom; a discharge tube connected at one end to said funnel shaped member to receive air therefrom and vented to the atmosphere at the other end; a suction tube joining said discharge tube at right angles behind said funnel shaped member whereby suction is created in said suction tube by air passing from said funnel shaped member through said discharge pipe; a cylindrical air-collecting band extending from the mouth of said funnel shaped member; an air-collecting tube joining said band at an oblique angle so that its outer end extends rearwardly from said band and to one side in the direction of rotation of said engine fan; an air discharge nozzle positioned below said rear window; a first conduit connecting said air-collecting tube and said air discharge nozzle to direct air into said automobile; a second conduit having one end connected to said suction tube and having its other end positioned below said dashboard to collect air from said automobile; and a butterfly valve in said air-collecting tube

and a flexible control cable connected to said valve and leading to said dashboard and operable from said dashboard to control flow of air through said air-collecting tube.

2. The subject matter of claim 1 in which said air discharge nozzle includes a deflector having a side plate forming an acute angle with said rear window so as to form a narrow discharge orifice to direct a stream of air against said rear window, having a floor portion to which the first conduit connects and having end walls.

3. A ventilating system in an automobile activated by the engine fan and discharging air in the rear of the passenger compartment and picking up air at the front of the passenger compartment, comprising: a funnel shaped member disposed behind said engine fan and directed toward said fan to pick up air therefrom; a discharge tube connected at one end to said funnel shaped member to receive air therefrom and vented to the atmosphere at the other end; a suction tube joining said discharge tube behind said funnel shaped member whereby suction is created in said suction tube by air passing from said funnel shaped member through said discharge pipe; an air-collecting tube having one end disposed to collect air at the mouth of said funnel shaped member and having its other end extending rearwardly and to one side in the direction of rotation of said engine fan; an air discharge nozzle positioned in the rear of said passenger compartment; a first conduit connecting said air-collecting tube and said air discharge nozzle to direct air into said automobile; and a second conduit having one end connected to said suction tube and having its other end positioned at the front of said passenger compartment to collect air from said automobile.

HENRY E. WUNDERLICH.

References Cited in the file of this patent

UNITED STATES PATENTS

Number	Name	Date
1,653,667	Ryder	Dec. 27, 1927
2,492,506	Stinnett	Dec. 27, 1949
2,604,837	Backe	July 29, 1952

FOREIGN PATENTS

Number	Country	Date
852,716	France	Nov. 9, 1939
518,122	Great Britain	Feb. 19, 1940