Nov. 3, 1953 H. O. CADMAN 2,657,504

FEED MECHANISM FOR GRINDING MACHINES

Filed Nov. 9, 1949 4 Sheets-Sheet 1

Fig. 1

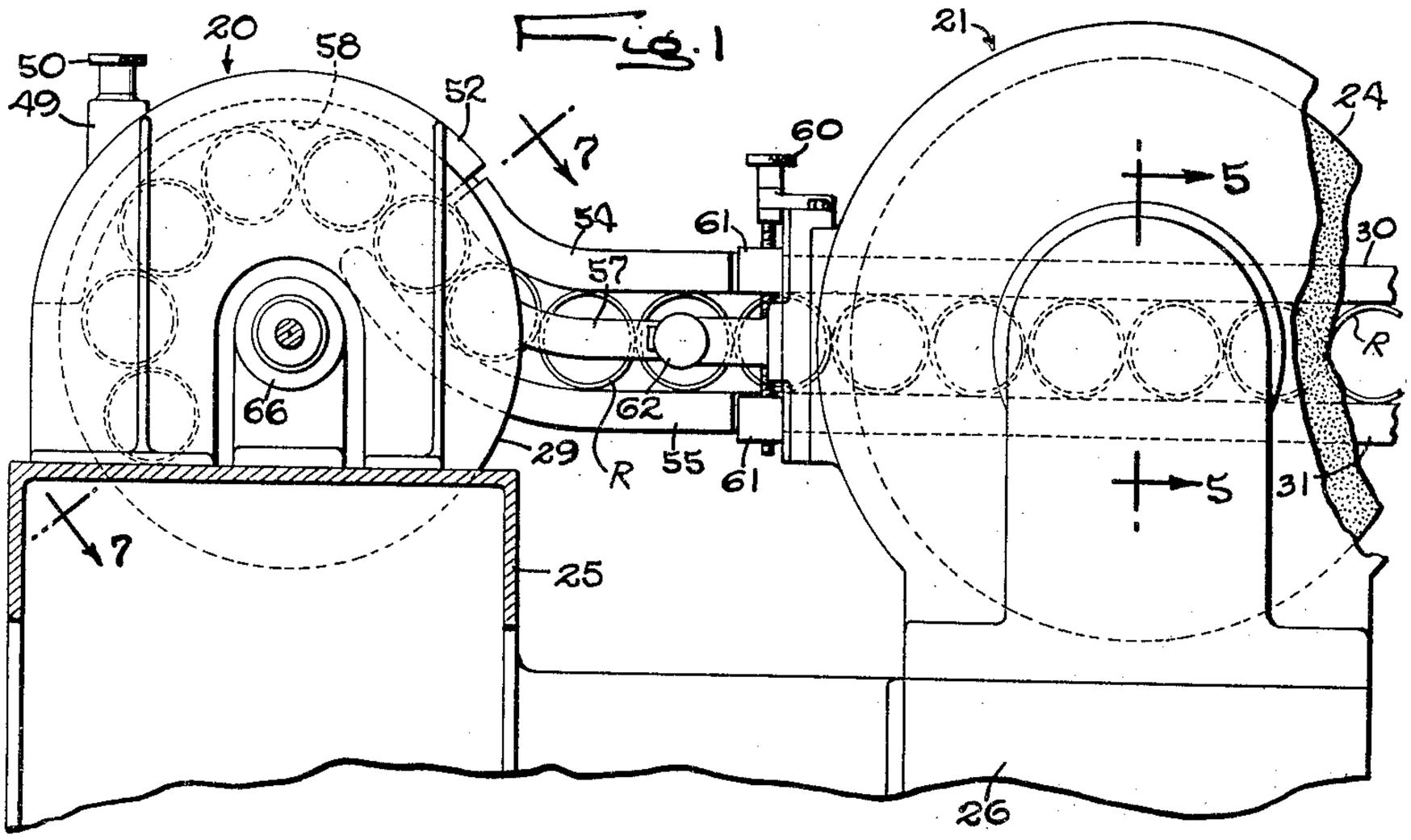

Fig. 2

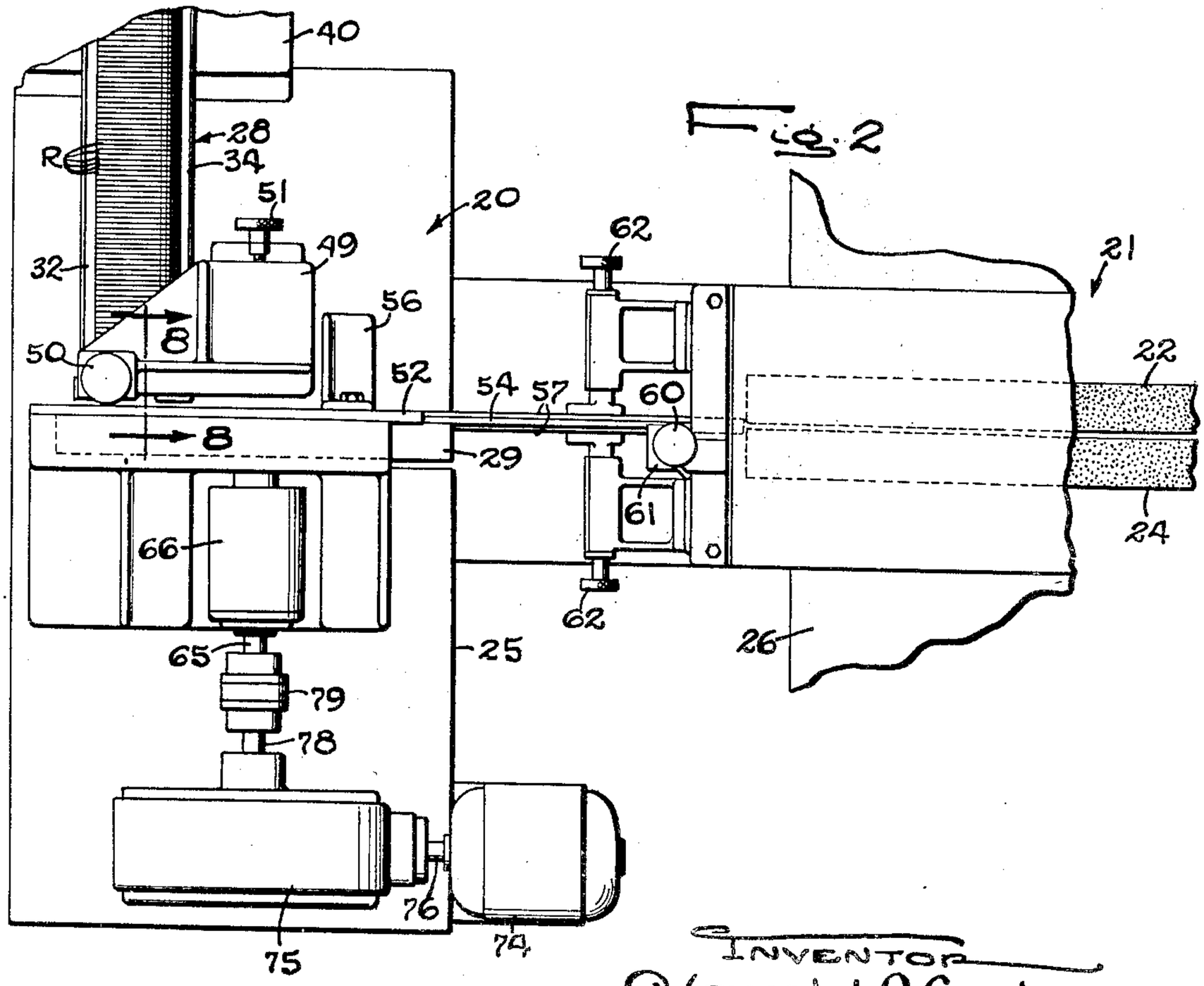

INVENTOR
Harold O. Cadman
Carlson, Pitzner, Hubbard + Wolfe
ATTORNEYS

Nov. 3, 1953 H. O. CADMAN 2,657,504

FEED MECHANISM FOR GRINDING MACHINES

Filed Nov. 9, 1949 4 Sheets-Sheet 2

Fig. 3

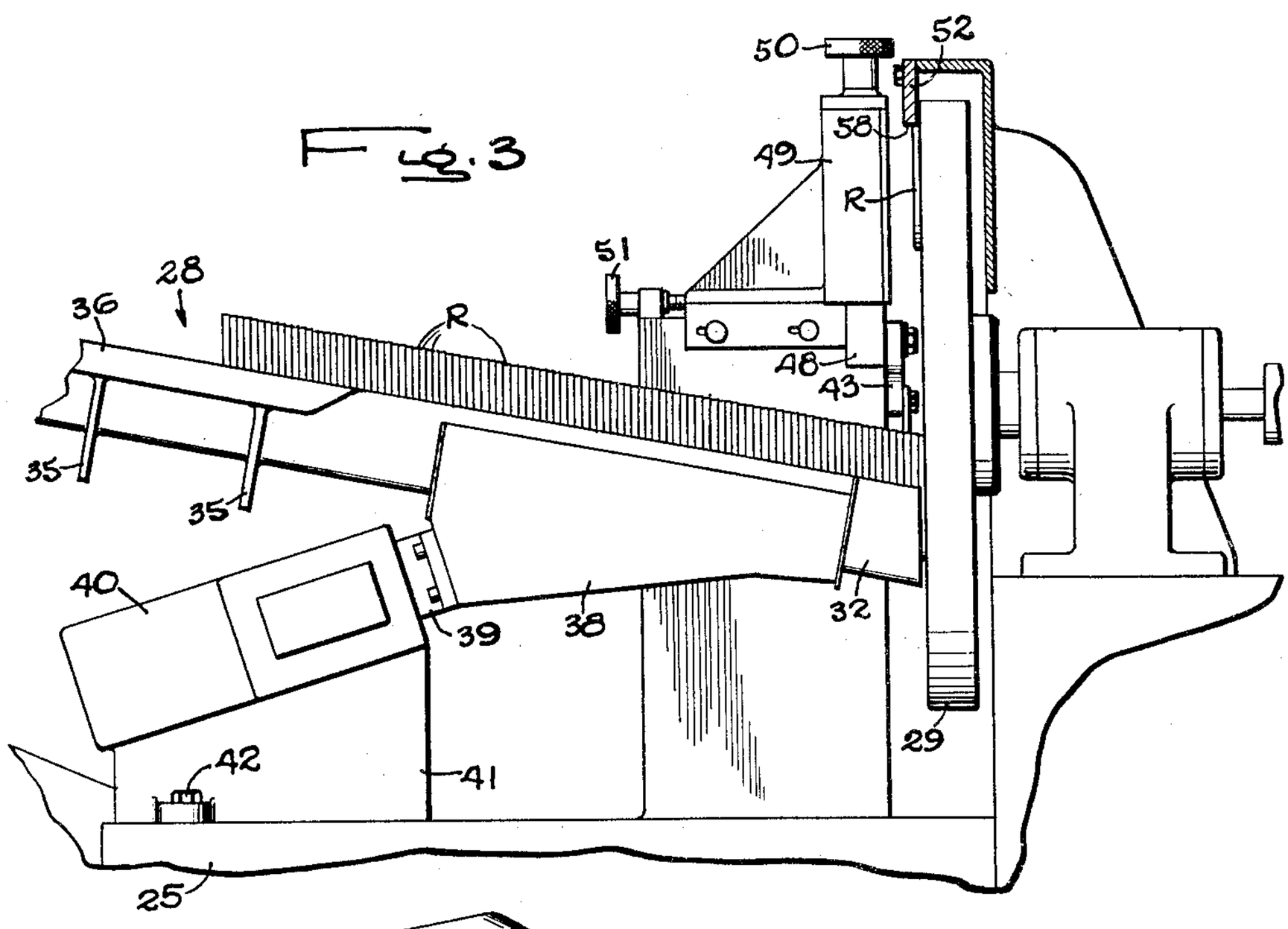

Fig. 4

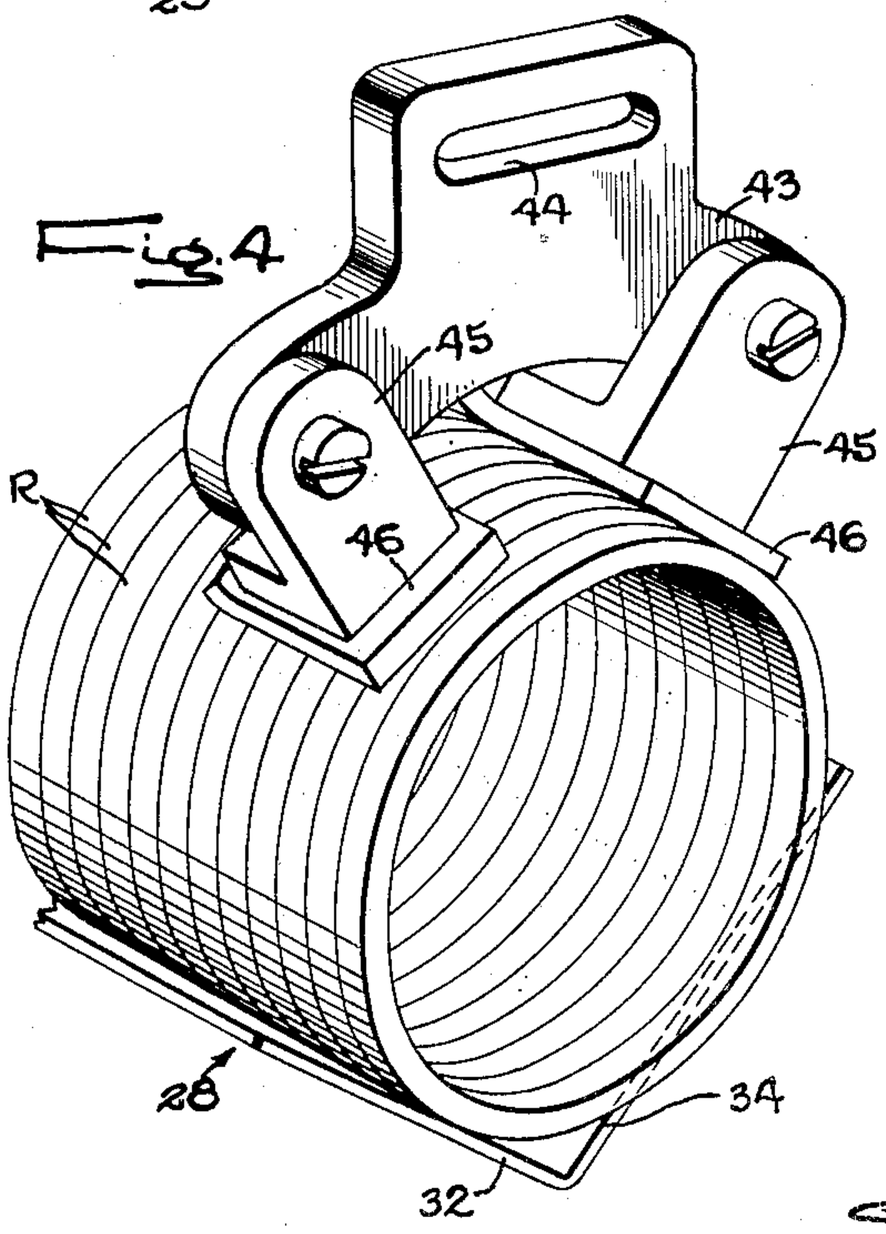

Fig. 5

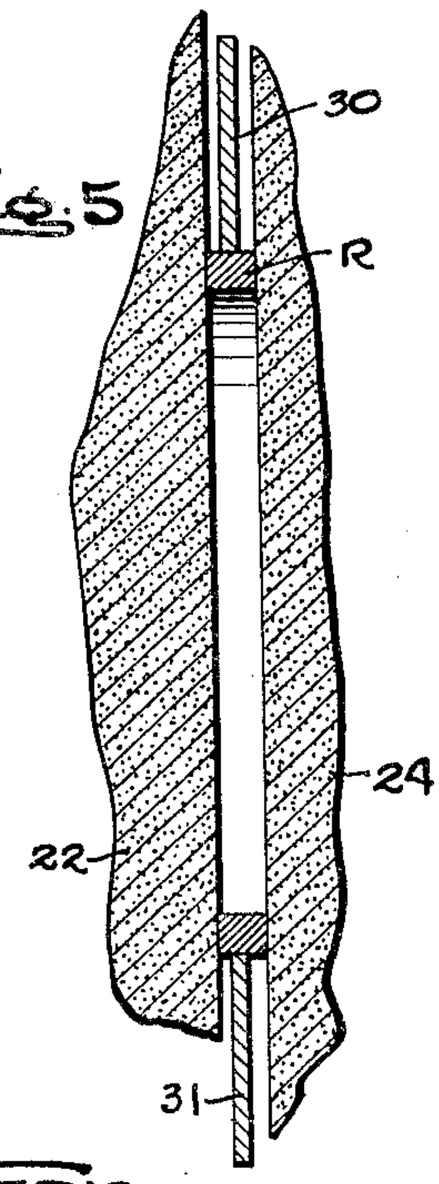

INVENTOR
Harold O. Cadman
Carlson, Pitzner, Hubbard + Wolfe
ATTORNEYS

Nov. 3, 1953 H. O. CADMAN 2,657,504

FEED MECHANISM FOR GRINDING MACHINES

Filed Nov. 9, 1949 4 Sheets-Sheet 3

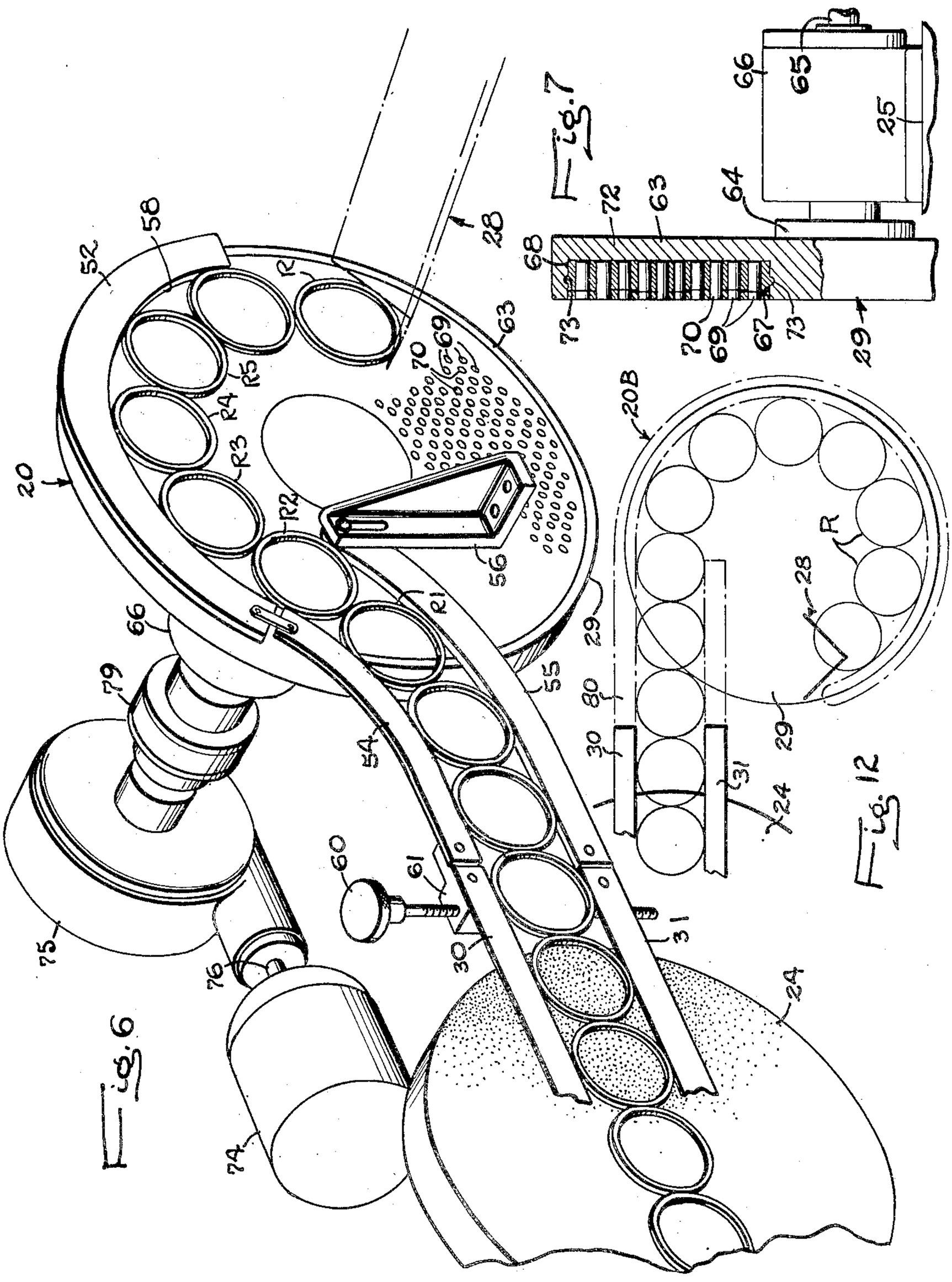

INVENTOR
Harold O. Cadman
Carlson, Pitzner, Hubbard & Wolfe
ATTORNEYS

Nov. 3, 1953 H. O. CADMAN 2,657,504

FEED MECHANISM FOR GRINDING MACHINES

Filed Nov. 9, 1949 4 Sheets-Sheet 4

Fig. 8

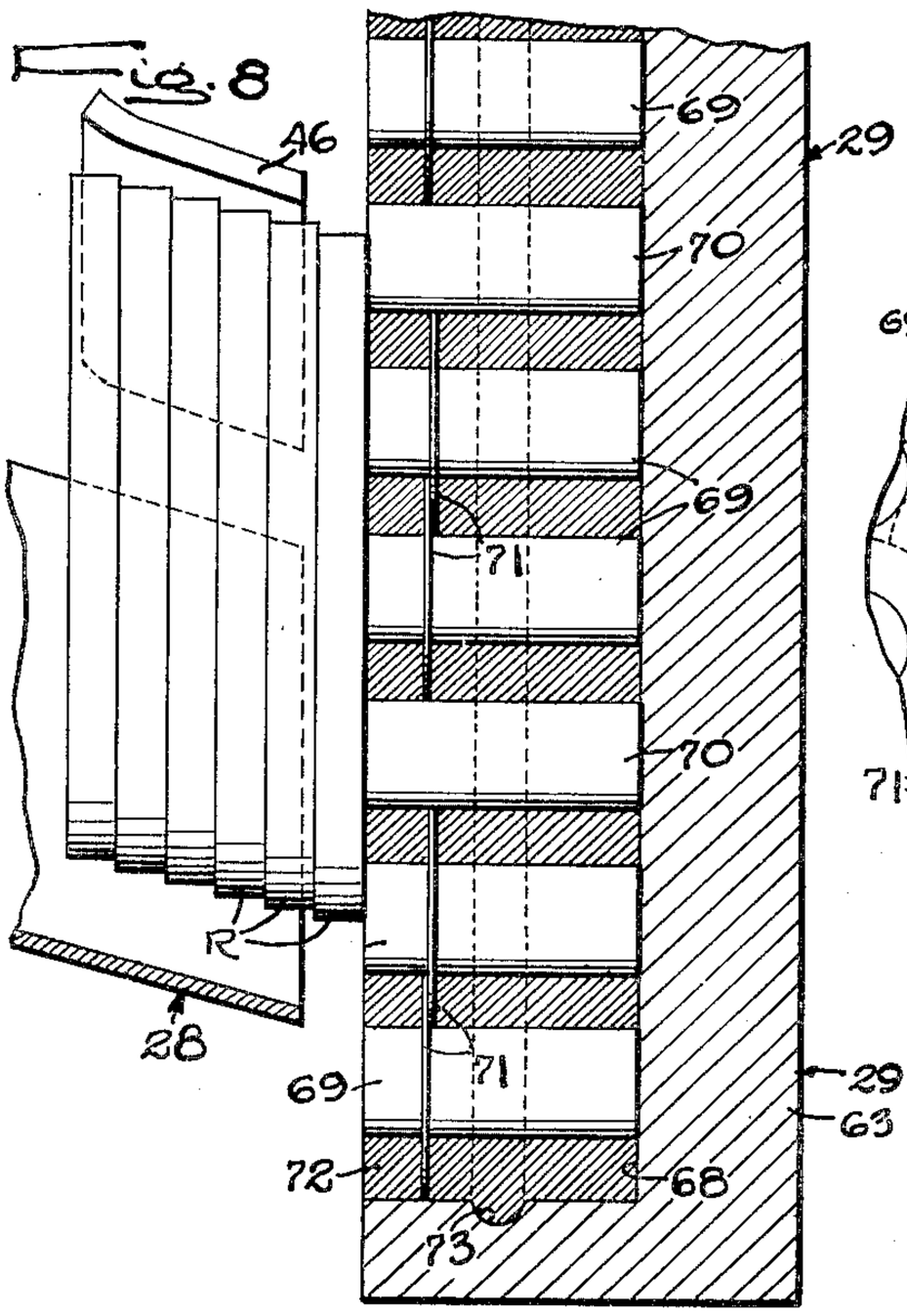

Fig. 9

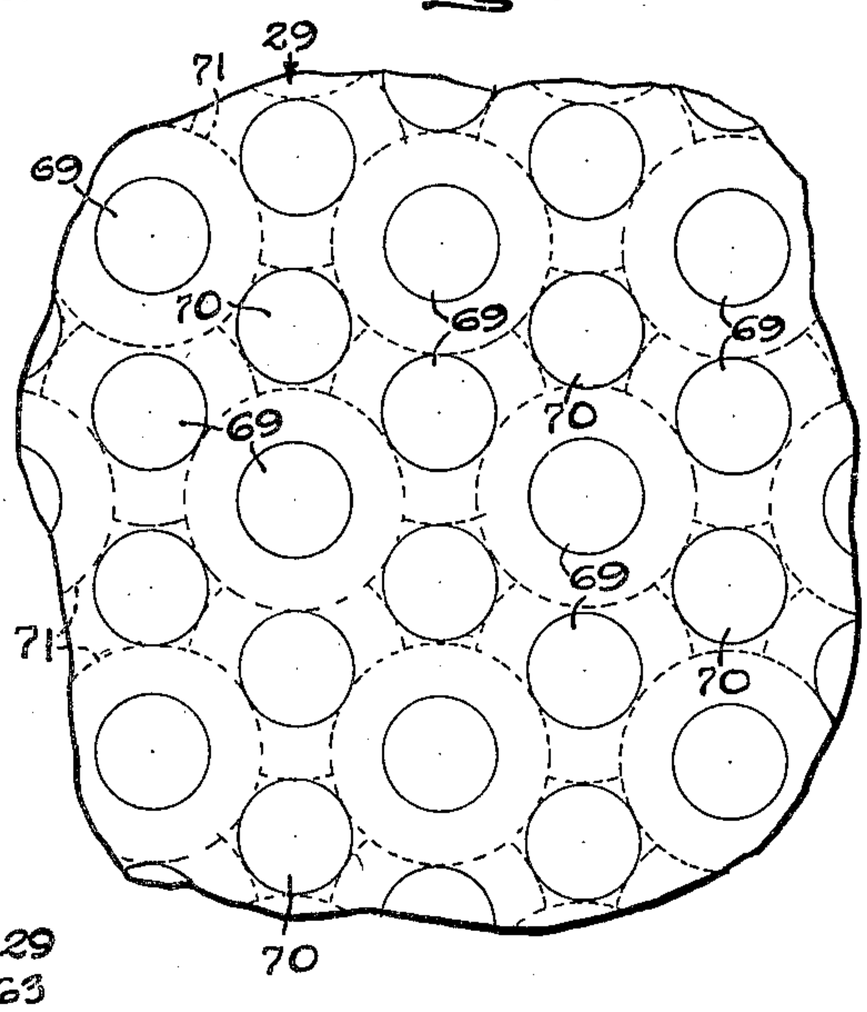

Fig. 10

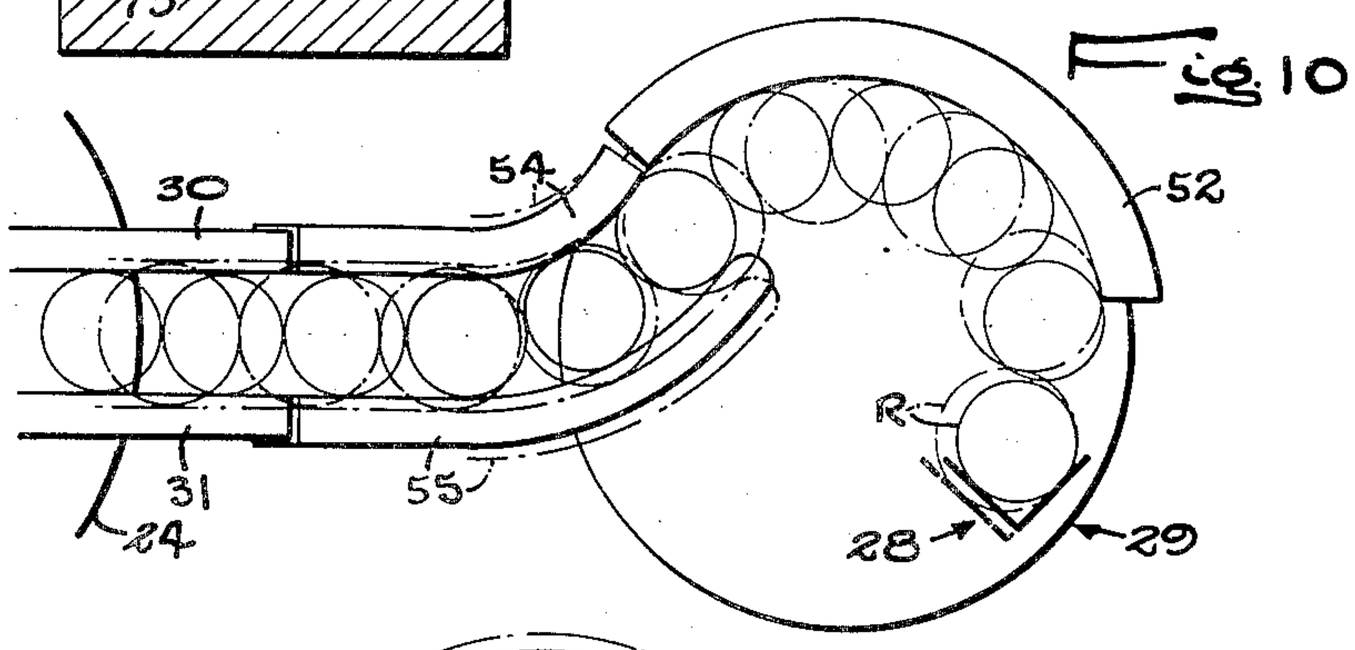

Fig. 11

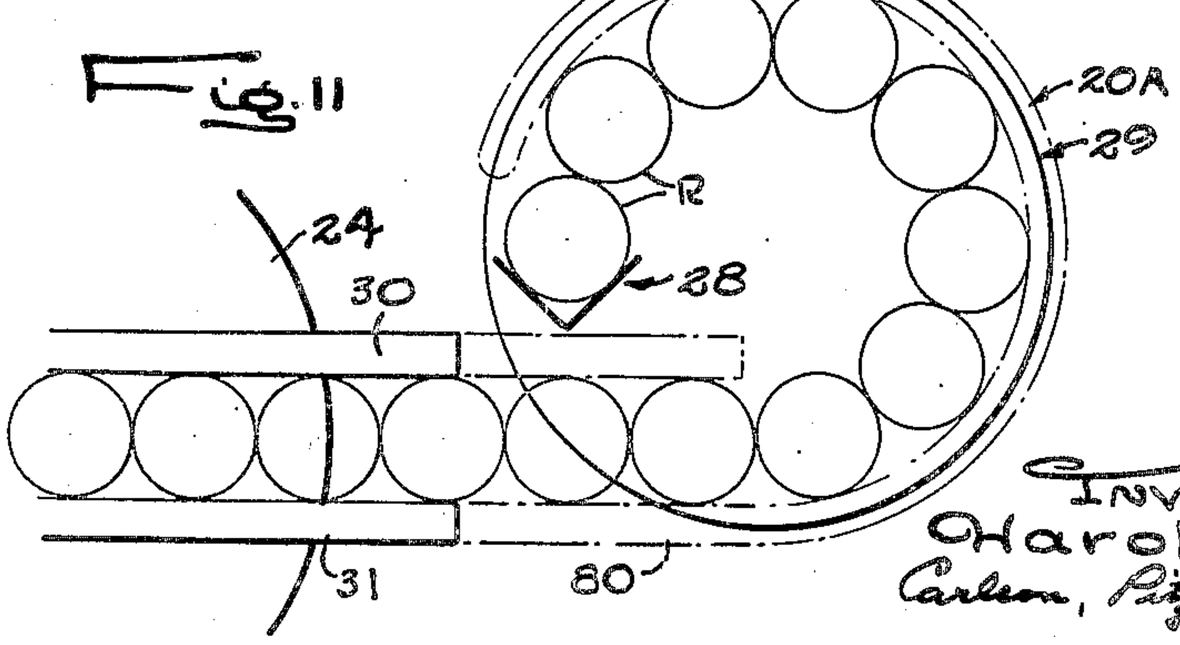

INVENTOR
Harold O. Cadman
Carlson, Pitzner, Hubbard & Wolfe
ATTORNEYS

Patented Nov. 3, 1953

2,657,504

UNITED STATES PATENT OFFICE

2,657,504

FEED MECHANISM FOR GRINDING MACHINES

Harold O. Cadman, Rockton, Ill., assignor, by mesne assignments, to Gardner Machine Company, a corporation of Illinois

Application November 9, 1949, Serial No. 126,377

15 Claims. (Cl. 51—112)

1

The present invention pertains generally to mechanisms for feeding substantially flat disc or ring-shaped workpieces to grinding machines. More specifically, the invention relates to a novel feed mechanism finding particular but by no means exclusive utility in connection with the feeding of piston rings to a grinding machine having a pair of aligned but axially spaced abrasive wheels.

One object of the invention is to provide a feed mechanism adapted to supply workpieces and to push them through the grinding zone in a continuous procession and at a relatively high rate.

Another object is to provide a feed mechanism of the above type which will be adapted to supply workpieces to the grinding machine at various preselected rates.

A further object is to provide a feed mechanism of the foregoing type which will readily accommodate various sized workpieces with a minimum of adjustment as well as a minimum expenditure of set-up time.

Another object is to provide a mechanism of the character set forth which will be simple, reliable, and automatic in operation.

Other objects and advantages will become apparent as the following detailed description proceeds, taken in the light of the accompanying drawings wherein:

Figure 1 is a fragmentary end elevation of an illustrative feed mechanism embodying the present invention.

Fig. 2 is a plan view of the mechanism of Fig. 1.

Fig. 3 is a fragmentary front elevation of the mechanism of Fig. 1, the feed magazine and its mounting being shown in considerable detail.

Fig. 4 is an enlarged fragmentary perspective view showing the forward end of the magazine together with its adjustable gate member.

Fig. 5 is an enlarged fragmentary vertical sectional view taken through the grinding wheels and guide bars and in the plane of line 5—5 in Fig. 1.

Fig. 6 is an enlarged fragmentary perspective view of the mechanism shown in Fig. 1, the side guide members and one of the grinding wheels having been omitted for purposes of clearer illustration.

Fig. 7 is a fragmentary sectional view taken radially through the chuck and in the plane of the line 7—7 in Fig. 1.

Fig. 8 is an enlarged fragmentary vertical sectional view detailing the lower end of the magazine and a portion of the magnetic chuck, such

2

view being taken in the plane of the line 8—8 in Fig. 2.

Fig. 9 is an enlarged fragmentary elevation of the face of the magnetic chuck member illustrating the layout of certain parts thereof.

Fig. 10 is a diagrammatic view of the face of the chuck and the guideways showing the manner in which the mechanism accommodates workpieces of different sizes.

Figs. 11 and 12 are diagrammatic views illustrating slightly modified feed mechanisms which also embody the present invention.

While the invention is susceptible of various modifications and alternative constructions, certain preferred embodiments have been shown in the drawings and will be described below in considerable detail. It should be understood, however, that there is no intention to limit the invention to the specific forms disclosed, but on the contrary, the intention is to cover all modifications and alternative constructions falling within the spirit and scope of the invention as expressed in the appended claims.

Referring more specifically to the drawings, there is shown an illustrative feed mechanism 20 embodying the present invention and operatively associated with a grinding machine 21 having a pair of axially aligned, spaced apart abrasive wheels 22, 24. In the present instance, the mechanism 20 is mounted on a base 25 which abuts rigidly against base 26 of the grinding machine 21. The mechanism 20 comprises a trough-like magazine 28 which is capable of holding a stack of workpieces such as piston rings R, together with a transfer member in the form of a rotatable magnetic chuck 29. The latter is adapted to withdraw rings individually from the magazine 28 and to convey them in a continuous procession toward the diametrical grinding zone of the machine 21. Rings are guided through such zone preferably by means of a pair of vertically spaced guide bars 30, 31 equidistant from the axis of the grinding wheels 22, 24 and extending between the grinding faces of the latter.

The magazine 28 (Figs. 2, 3 and 4) comprises an elongate trough of shallow V-shape and defined by side panels 32, 34. The structure is reinforced at intervals along its length by means of a series of longitudinally spaced transverse gusset plates 35 welded or otherwise rigidly secured to the panels 32, 34. To facilitate loading, the panel 34 may have an outturned flange 36 integral with its upper edge. The magazine 28 is arranged so as to slope downwardly toward the chuck 29 and thereby create a tendency for the workpieces R

to gravitate toward the face of the chuck. Although the degree of inclination is not particularly critical, it has been found convenient in the present instance to incline the magazine at an angle of approximately 10° with the horizontal.

To obtain orderly movement of the workpieces R along the magazine **28**, the latter is mounted upon a vibratory support (Fig. 3). Thus the lower or forward end portion of the magazine **28** is provided with a pair of spaced apart supporting plates **38** rigidly fixed to the panels **32**, **34**. The plates **38**, in turn, are rigidly fixed to the armature **39** of a vibrator **40**. The latter may be of any suitable design selected by those skilled in the art and in the present instance is of the electromagnetic type. The vibrator **40** has integral therewith a base **41** which is rigidly secured as at **42** to the base **25** of the feed mechanism. The upper end portion of the magazine **28** is preferably supported upon an upstanding leaf spring (not shown) which is capable of sustaining the weight of the magazine while permitting vibration longitudinally thereof.

In order to insure that only one of the workpieces R at a time will pass from the magazine **28** to the face of the magnetic chuck **29**, an adjustable gate member **43** is disposed in transverse and overlying relation with the lower end portion of the magazine (Fig. 4). In the present instance, the member **43** is of inverted T-shape and its upstanding portion is formed with a mounting slot **44**. Swivelly attached to the lateral extremities of the member **43** are a pair of L-shaped feet **45**, each of the latter having fixed thereto a relatively short ski-like shoe **46**. In the mechanism **20**, the feet **45** are arranged radially of the workpieces R and with the lowermost or heel ends of their shoes **46** almost tangent to the outer peripheries of the underlying workpieces in the magazine. Due to the flux penetration of the first several workpieces in the magazine, they tend to move bodily parallel to the face of the chuck each time the lowermost workpiece is withdrawn. To prevent jamming of the workpieces against the toe of each of the shoes **46**, the latter are slightly upturned. In addition, the toe end of each of the shoes **46** is preferably inclined at a slight angle to the longitudinal axis of the magazine (see Fig. 8) so as to effect a sort of funneling action toward the discharge end of the magazine.

The gate member **43** is supported by means of an upright bar **48** slidably housed within a bracket **49**. The bar **48**, and hence the member **43**, can be positioned vertically by means of an adjusting knob **50** located at the top of the bracket **49**, thus permitting the magazine to accommodate workpieces of various sizes and diameters. to permit adjustment of the member **43** in a direction generally longitudinal of the magazine, the bracket **49** is mounted for limited horizontal sliding movement which is effected by means of another adjusting knob **51**. It will be observed from Figs. 4 and 8 that when the gate member **43** is adjusted for feeding circular workpieces of a particular size the attached shoes **46** are spaced from the magnetic face of the chuck **29** by a distance slightly greater than the thickness of a single workpiece R but considerably less than the thickness of two workpieces together. Thus the foremost ring R in the magazine, as well as the next few rings adjacent thereto, are maintained in a vertical position and only one ring at a time is permitted to pass from the magazine to the chuck **29**.

Means is provided for exerting a yieldable push in the vicinity of the trailing end of a procession of workpieces so as to force them through the grinding zone against the resistance of the grinding wheels over a wide range of cuts. This is accomplished by the continuous power feeding of the workpieces along the guide bars **30**, **31** in a manner which takes full advantage of the permanent magnetism of the chuck **29**. In furtherance of such objective, an arcuate backing rail **52** (Figs. 1, 6 and 10) is fixedly mounted in overlying relation with a portion of the periphery of the chuck **29**. The end of the backing rail **52** nearest the grinding wheels has fastened thereto an extension **54** which connects with upper guide bar **30**. Spaced apart from and vertically below the extension **54** is a curved stripper bar **55**. One end of the latter is supported by means of a standard **56** while its other end connects with the lower guide bar **31**. Between the extension **54** and the stripper bar **55**, there are mounted a pair of closely spaced side guides **57** which straddle the path of the workpieces and confine the latter thereto. In the foregoing structure, the workpieces are drawn one by one from the magazine and positioned on the face of the chuck **29** by reason of the latter's magnetic force. Without further repositioning, the chuck carries the workpieces bodily in an arcuate path defined primarily by the inner peripheral surface **58** of the backing rail **52**, such surface when extended being tangent to the inner face of magazine panel **32**.

Provision is made in the illustrative mechanism **20** for stripping the workpieces from the face of the chuck. In the present instance, this is accomplished by shifting the workpieces radially of the chuck **29**. Such action is effected by means of the stripper bar **55** and the backing rail extension **54**, both of which define a path curving from what might be considered a circumferential direction to a secantial direction with reference to the chuck.

By reason of the construction described above, it will be appreciated by those skilled in the art that the chuck **29** is adapted to exert a yieldable force upon the procession of workpieces approximately in proportion to the resistance of the grinding wheels. This, of course, is governed by the depth of cut. Where the cut is light and the resistance low, continuous feeding of the workpieces through the grinding zone can be effected with relatively little force, such, for example, as that which the chuck **29** would exert on the workpieces R**1** and R**2**. On the other hand, where the cut is heavy and the resistance is substantially higher, a relatively large amount of force is required to feed the workpieces through the grinding zone. Under such circumstances, it might be necessary to have the force of the chuck exerted upon additional workpieces such as R**3**, R**4** and R**5** as well as R**1** and R**2**. Any gaps between these workpieces will be closed as a result of limited sliding of some of them along the face of the chuck due to the resistance or back pressure of the grinding wheels acting along the center line of the procession. The transmission of thrust along such line, notwithstanding its curvature, is of course made possible by the restraining action of the backing rail **52** as well as the extension **54** and stripper bar **55**.

The foregoing arrangement is adapted to accommodate workpieces of different diameters readily and with a minimum of adjustment. Referring, for example, to Fig. 10, it will be noted

that the proportions of the magazine and the backing rail **52** remain the same regardless of the diameter of the particular batch of workpieces received by the mechanism **20**. The spacing of backing rail extension **54**, stripper bar **55** and side guides **57**, as well as that of guide bars **30, 31**, must, however, be altered to accommodate different sized workpieces. For this purpose, a pair of adjusting screws, each having a knurled knob **60**, are mounted at the opposite extremities of the guide bars **30, 31**, the construction at only one end of the bars being shown in the drawings. Each screw is threaded along its length with the leads of the thread reversed in the mid portion of the screw. Opposite ends of each screw threadedly engage cooperating screw blocks **61** fixed to the adjacent ends of the respective guide bars **30, 31**. Thus, the guide bars can be adjusted simultaneously toward and from each other by reverse rotation of the threads by the knobs **60**. Pivotally secured at one end to the block **61** of the upper guide bar **30** and at the other end to one extremity of the backing rail **52** is the extension **54**. The stripper bar **55**, on the other hand, is pivotally fixed to the block **61** of the lower guide bar. The other end of the bar **55** is adjustably secured to the standard **56** and is movable in a vertical direction. Adjustment of the side guides **57** may readily be effected by the use of adjusting knobs **62** (Fig. 2).

Turning now to the magnetic chuck **29**, it will be perceived that this member comprises a disc **63** fixed to flange **64** of drive shaft **65**. The latter is journaled in main supporting bearing **66** anchored on the frame of the mechanism **20**. The disc **63** is preferably formed of material having a high permeability, such as soft steel or the like and has a large annular recess **67** in its face. Disposed upon floor **68** of the recess **67** so as to produce a number of spaced apart, alternate poles, are a plurality of relatively small permanent magnets **69**. In the present instance, the magnets **69** are of round bar stock and are formed from an alloy having a high magnetic retentivity such as that known commercially as Alnico. Magnetic elements having different forms and compositions may also be used with effectiveness.

Provision is made in the chuck **29** for obtaining a magnetic field of the proper intensity to avoid creating excessive friction between the adjacent workpieces which would unduly resist lateral sliding movement of the foremost workpiece in the magazine relative to the next succeeding piece and thereby hamper the successive transfer of workpieces from the magazine to the chuck. Yet the field is made sufficiently strong to permit the power feeding of workpieces to the grinding zone throughout a large range of wheel resistances. This is accomplished in the present instance by interspersing among the magnets **69** a plurality of plugs **70** (Figs. 8 and 9). The latter may be of soft iron or other high permeability material but are not permanently magnetized, thereby reducing the intensity of the field produced on the face of the chuck **29**. With such arrangement, each plug is surrounded by a plurality of closely spaced poles of each polarity, thereby accommodating the chuck **29** to ring and disc-shaped workpieces of widely varying diameter. In certain cases where hard wear on the surface of the chuck must be combatted, the face end portions of the plugs **70** might be surrounded by washers made of particularly hard material such as tungsten carbide. In still other applications, it might be possible to obtain a field

of the desired intensity by dispensing with the plugs **70** altogether.

To produce regular and uniform spacing of the magnets and plugs **69, 70** during assembly on the disc **63**, a number of these parts may be fitted with washers **71** of brass or other non-magnetic material. After such members have been positioned in properly spaced relation upon the recess floor **68**, a matrix of low melting point base metal **72** is cast around them and finished off even with the face of the disc **63**. The matrix **72**, in turn, is mechanically anchored in the annular recess **67** as by means of anchor grooves **73** in the opposed, generally cylindrical surfaces on the body portions of the disc **63** defining the inner and outer circumferential edges of the recess, see Fig. 7.

The mechanism **20** includes means for selectively varying the rate at which pieces are fed to the grinding wheels **22, 24**. For this purpose, the magnetic chuck **29** is equipped with a variable speed drive comprising a motor **74** and a speed reducer **75** which happens to be of the worm and gear type. Power is transmitted to the speed reducer by motor shaft **76** and is transmitted from the speed reducer by means of shaft **78** which is connected to the chuck drive shaft through a coupling **79**.

Referring now to Fig. 11, there is shown in diagrammatic form a modified feed mechanism **20A** similar to the mechanism **20** but having the magazine located between the rotational axis of the chuck and the grinding zone rather than on the opposite side of the chuck axis as in the mechanism **20**. In the modified construction, the axis of the chuck **29** does not lie in the same horizontal plane as the axis of the grinding wheels but is offset vertically therefrom. This arrangement permits workpieces to accumulate around substantially the entire face of the chuck **29**, the workpieces leaving the chuck tangentially after almost a complete revolution of bodily movement therewith. The mechanism **20A** may have a modified backing rail **80** extending circumferentially and clockwise from a point slightly above the magazine and terminating in an integral extension horizontally aligned with the lower guide bar **31**. Such construction is advantageous for heavy cuts where it is necessary to utilize to the maximum possible extent the magnetism of the chuck **29** so as to obtain a sufficient pushing force on the workpiece.

The modified feed mechanism **20B** shown diagrammatically in Fig. 12 closely resembles the mechanism **20A**. It differs, however, in that the axis of the chuck is located below the grinding zone and the workpieces are fed downwardly from the magazine instead of upwardly. In other words, the chuck of the mechanism **20B** rotates counterclockwise as viewed in Fig. 12. The backing rail and stripper bar of the mechanism **20B** are substantially identical with those of the mechanism **20A**.

At this point, it will be apparent that the feed mechanisms described herein possess a number of advantages in addition to those already discussed. First of all, since the mechanisms produce a positive feed, they are independent of gravity and susceptible of operation in any plane. Notwithstanding their positive action, the risk of breakage of workpieces by the mechanisms **20, 20A** and **20B** is negligible because of the yieldable nature of the force applied. The close spacing of magnets in the chuck **29** reduces flux penetration but at the same time preserves field intensity.

Upon release from the magazine 28, the workpieces are immediately oriented in the plane of the grinding zone and require no further orientation. They are also released from the magazine in the proper position relative to the magnetic chuck 29 and subsequent repositioning on the face of the chuck is entirely unnecessary. The guiding arrangement is such that the rings are always maintained in exactly the correct position for grinding. In addition, the absence of feed rolls and complex handling equipment, together with the foregoing features, renders the mechanism susceptible of extremely high, as well as low, rates of feed. For example, one feed mechanism embodying the present invention has proven itself capable of feeding piston rings into a grinding machine at rates in the neighborhood of 1,000 per minute. Since the chuck occupies a position relatively remote from the grinding zone, its face will only be subject to normal wear produced by the sliding of the workpieces thereon and will not be subjected to additional and abnormal wear due to the accumulation and grating of abrasive particles thereon.

I claim as my invention:

1. A feed mechanism for a grinding machine having grinding wheels defining a grinding zone and a pair of spaced apart guide bars extending through the grinding zone in straddling relation with the central portion thereof, said feed mechanism comprising, in combination, a rotatable magnetic chuck of disc shape forming a flat face thereon, an elongated trough-shaped magazine adapted to hold a stack of workpieces and to present the same individually to the face of said chuck, said trough being mounted with the elongated axis thereof disposed at a substantial angle to the plane of said chuck face, said trough having a gate end thereon disposed in opposing relation to said chuck face at a position radially within the peripheral edge thereof, a fixed backing rail overlying a portion of the peripheral surface of said chuck and adapted to constrain the workpieces on the latter's face to move bodily therewith in a concentric path, the inner peripheral surface of said backing rail being substantially tangent to one face of said trough-shaped magazine, a backing rail extension located between said backing rail and one of said guide bars, opposite ends of said extension being substantially alined with adjacent ends of said backing rail and said one guide bar, said backing rail extension having a reverse curve therein leading away from the axis of said chuck, a stripper bar disposed in spaced relation from said extension and having a similar curvature therein to effect alignment of one end of said stripper bar with the other of said guide bars, magnetic means disposed contiguous to said chuck face and emitting magnetic flux outwardly thereof in a substantially continuous arcuate band reaching across said trough gate and extending circumferentially to said stripper member, and driving means connected in driving relation to said magnetic chuck for causing rotation thereof to effect a yieldable push on said workpieces so as to feed them in a continuous procession through the grinding zone via the path defined by said backing rail, said extension, said stripper bar and said guide bars.

2. A mechanism for power feeding piston rings and the like with a yieldable force to a grinding machine having a pair of spaced apart and adjustable guide bars extending through the grinding zone, said mechanism comprising the combination of a downwardly inclined magazine adapted to hold a stack of workpieces, supporting means disposed in supporting relation to said magazine and including a vibrator, a magnetic chuck disposed contiguous to the lower end of said magazine and having a plurality of permanent magnets defining in its face areas of alternate polarity, said chuck being adapted to receive said workpieces one at a time from said lower end of said magazine, a variable speed drive operatively connected with said chuck for causing rotation thereof, an arcuate backing rail overlying a portion of the periphery of said chuck and defining a path for workpieces concentric with the axis of said chuck, a backing rail extension pivotally secured at one end to said backing rail and adapted at the other end for pivotal attachment to one of said guide bars, said extension curving reversely away from said backing rail, a stripper bar associated with said chuck and adjustably secured at one end to a fixed support and susceptible of pivotal attachment at its opposite end to the other one of said guide bars, said stripper bar being spaced from said backing rail extension but having a similar curvature therein for interception of workpieces moving bodily with said chuck, and a pair of adjustable side guides mounted on opposite sides of the flat space bounded on one edge by said rail extension and said one guide bar and on the other edge by said stripper bar and said other guide bar, said side guides extending generally between said magnetic chuck and the grinding zone of the machine.

3. In a feed mechanism for a grinding machine, the combination of a rotatable disc of material having a relatively high permeability, said disc also defining an annular recess in the face thereof, said recess being bounded at the inner and outer circumferential edges thereof by annular portions of the body of said disc, the radially opposed surfaces of said annular disc body portions defining opposed anchor grooves therein, a plurality of bar-shaped permanent magnetic elements disposed in spaced relation within said recess and with their outer ends arranged so as to produce a plurality of areas of alternate polarity in the plane of the face of said disc, the inner ends of said elements being disposed in firm abutting engagement with the bottom of said recess to have intimate magnetic contact with said disc, and a matrix of base metal adapted to retain said permanent magnetic elements within the recess, said base metal being disposed within said anchor grooves and in the interstices between said magnetic elements.

4. In a feed mechanism for a grinding machine, a permanent magnetic chuck comprising, in combination, a rotatable disc of material having a relatively high permeability, said disc also having an annular recess in the face thereof, a plurality of bar-shaped permanent magnetic elements disposed in spaced relation within said recess and with their ends arranged so as to produce a plurality of areas of alternate polarity in the plane of the face of said disc, a plurality of bar-shaped but unmagnetized elements of relatively high permeability material interspersed with said magnetic elements, a matrix of base metal disposed within the interstices between said magnetic elements and said unmagnetized elements, and anchoring means on said disc positively engaging said matrix to securely retain said

magnetic elements and said unmagnetized elements within the recess of said disc.

5. In a feed mechanism for a grinding machine, a permanent magnetic chuck comprising the combination of a disc of material having a relatively high permeability, said disc also having a recess in the face thereof, driving means operatively connected with said disc for causing rotation thereof, a plurality of permanent magnetic elements disposed in spaced relation within said recess and with their outer ends arranged so as to produce a plurailty of areas of alternate polarity in the plane of the face of said disc, the inner ends of said elements being disposed in intimate magnetic contact with said disc, a plurality of unmagnetized plugs of hardened, wear resistant material interspersed with said magnetic elements and adapted to control the intensity of the magnetic field set up by the latter, a matrix of base metal disposed within the interstices between said magnetic elements and said unmagnetized plugs, and anchoring means on said disc positively engaging said matrix to securely retain said magnetic elements and said unmagnetized plugs within the recess of said disc.

6. In a feed mechanism for a grinding machine, the combination comprising a rotatable chuck in the form of a disc having a flat end face thereon, a trough-like magazine adapted to hold a stack of workpieces, means supporting said magazine in downwardly inclined position with its lower end terminating in closely spaced opposing relation with the face of said chuck at a position radially within the peripheral edge of the face, said supporting means including a vibrator for effecting vibration of said magazine and its contents whereby the latter tend to gravitate toward the face of said chuck, an adjustable gate member mounted adjacent said lower end of said magazine for holding the stack of workpieces erect, said gate member having a shoe running generally longitudinally of said magazine but spaced from the face of said chuck by a distance sufficient to permit only one workpiece at a time to be withdrawn from said chuck, and an arcuate series of magnets on said chuck contiguous to said chuck face and emitting magnetic flux outwardly thereof in a substantially continuous band reaching across said lower end of said magazine trough and extending circumferentially around said chuck, said magnets serving as an incident to rotation of said chuck to withdraw successive workpieces individually from said magazine to accumulate them in an annular, side by side array on said chuck face.

7. The combination of a grinding machine having oppositely disposed abrasive wheels and guide bars disposed therebetween and adapted to channel workpieces through a path alongside the wheels for simultaneous grinding of both sides of the workpieces, with a feed mechanism comprising guide means associated with said guide bars, a magazine mounted in assembled relation with said machine and adapted to hold a supply of workpieces, a rotatable chuck having a smooth face disposed adjacent the outlet of said magazine, magnets disposed in said chuck for magnetizing said face, said magnets producing magnetic flux about said chuck face for withdrawing workpieces individually from said magazine and for causing them to adhere to said face in side-by-side relation upon rotation of said chuck, means located in overlying relation to said magnetic chuck face and

adapted to guide the workpieces from said face into the path defined by said guide bars, said magnetic face upon rotation of said chuck serving to yieldably feed a continuous procession of workpieces along said guide bars between said abrasive wheels.

8. A high speed grinder comprising, in combination, a grinding machine having a pair of opposed rotary abrasive wheels defining a grinding zone for finishing opposite ends of workpieces, a pair of generally parallel guides mounted in said zone for channeling a succession of workpieces across said wheels, a workpiece feeding chuck rotatably mounted adjacent the inlet end of said guides, driving means operatively connected to said chuck, said chuck defining a smooth, flat annular face perpendicular to the rotary axis thereof, magnet means disposed contiguous to said chuck face and emitting magnetic flux outwardly thereof, an elongated magazine shaped to contain a stack of workpieces and having a gate end disposed in opposing relation to said chuck face at a position radially within the peripheral edge of the face, said chuck upon rotation thereof being adapted to withdraw workpieces individually from said magazine to form an annular array on said chuck face, gate members on the gate end of said magazine disposed in predetermined spaced relation to said chuck face to permit only a single layer of workpieces to be deposited on said chuck face, an arcuate backing rail overlying a segment of the periphery of said chuck face extending circumferentially generally from said magazine gate, intermediate guide means interconnecting one of said guides with the end of said rail circumferentially remote from said magazine, and a workpiece stripper bar interconnected with said other guide and extending across said chuck face in generally parallel relation thereto to a position radially within the periphery thereof.

9. A high speed grinder comprising, in combination, a grinding machine having two opposed rotary abrasive wheels defining a grinding zone for finishing opposite surfaces of workpieces upon a single pass therethrough, a pair of generally parallel guides extending through said zone for channeling a succession of workpieces across said wheels, a workpiece feeding chuck rotatably mounted adjacent the inlet end of said guides, driving means operatively connected to said chuck, said chuck defining a smooth, flat annular face perpendicular to the rotary axis thereof, an elongated magazine shaped to contain a stack of workpieces and having a gate end disposed in opposing relation to said chuck face, magnet means disposed contiguous to said chuck face and emitting magnetic flux outwardly thereof in a substantially continuous band reaching across said magazine gate and extending circumferentially along said face, said magnets upon rotation of said chuck being adapted to withdraw workpieces individually from said magazine to form an annular side by side array on said chuck face, a stationary, arcuate backing rail overlying a segment of the periphery of said chuck face extending circumferentially generally from said magazine gate, intermediate guide means interconnecting one of said guides with the end of said rail circumferentially remote from said magazine, and a stationary workpiece stripper bar interconnected with said other guide and extending obliquely across said chuck face in generally parallel relation thereto to a position radi-

ally within the periphery thereof, said stripper bar being disposed in spaced complementary relation to said intermediate guide means.

10. For use with a grinding machine having a pair of opposed grinding wheels defining a grinding zone and a pair of generally parallel spaced guides extending through the zone, an automatic high speed feeder for yieldably forcing a procession of workpieces along the spacing between said guides, said feeder comprising a rotary chuck defining a flat annular face perpendicular to the rotary axis of said chuck, driving means operatively connected to said chuck, an elongated magazine section shaped to contain a stack of workpieces and having a gate end disposed in opposing relation to said chuck face at a position radially within the peripheral edge of the face, the longitudinal axis of said magazine section being disposed at a substantial angle relative to the plane of said chuck face, gate members on said gate end of said magazine disposed in predetermined spaced relation to said chuck face to permit only a single layer of workpieces to be deposited on said chuck face, an elongated intermediate guide member adapted to be connected to the inlet end of one of the grinder zone guides of the grinding machine and having a portion thereof disposed in generally tangential relation to a peripheral portion of said chuck face circumferentially removed from said magazine gate end, an elongated stripper member adapted to be connected to the inlet end of the other of said grinding zone guides, said stripper member extending across a radially inward portion of said chuck face in spaced complementary relation to said intermediate guide member, and magnetic means underlying an annular portion of said chuck face opposing said magazine gate end and extending circumferentially therefrom to said stripper member.

11. For use with a grinding machine having a pair of opposed grinding wheels defining a grinding zone and a pair of generally parallel spaced guides extending through the zone, an automatic high speed feeder for yieldably forcing a procession of workpieces along the spacing between said guides, said feeder comprising a rotary chuck defining a flat annular face perpendicular to the rotary axis of said chuck, driving means operatively connected to said chuck, an elongated magazine section shaped to contain a stack of workpieces and having a gate end disposed in opposing relation to said chuck face at a position radially within the peripheral edge of the face, the longitudinal axis of said magazine section being disposed at a substantial angle relative to the plane of said chuck face, gate members on said gate end of said magazine disposed in adjustable predetermined spaced relation to said chuck face to permit only a single layer of workpieces to be deposited on said chuck face, a stationary backing rail overlying a segment of the periphery of said chuck face extending circumferentially generally from said magazine gate, an extension on said backing rail curved reversely therefrom and adapted to be connected to the inlet end of one of the grinder zone guides of the grinding machine, a stationary, elongated stripper member adapted to be connected to the inlet end of the other of said grinding zone guides, said stripper member curved reversely to said backing rail and extending diagonally across said chuck face in spaced complementary relation to said rail extension and disposed radially inward of said extension relative to said chuck, and magnetic means underlying an annular portion of said chuck face opposing said magazine gate end and extending circumferentially therefrom to said stripper member.

12. An automatic high speed feeder for yieldably forcing a procession of workpieces along a path defined by a pair of spaced complementary guides, said feeder comprising, in combination, a rotary chuck having a smooth flat annular face perpendicular to the chuck axis, an elongated magazine shaped to contain a stack of workpieces and disposed at a steeply inclined angle relative to said chuck face, said magazine having a gate end spaced a predetermined distance from said chuck face and disposed in opposing relation thereto at a position thereon radially within the peripheral edge of the face, an arcuate backing rail overlying a circumferential segment of the periphery of said chuck face extending generally from said magazine gate, an elongated extension connected to said backing rail and adapted to be connected to one of the complementary guides, a workpiece stripper member adapted to be connected to the other of the complementary guides and extending into overlying relation to said chuck face in spaced complementary relation to said rail extension on the radially inward side thereof relative to said chuck, magnet means disposed contiguous to said chuck face and emitting magnetic flux outwardly thereof in an arcuate band reaching across said magazine gate end and extending circumferentially to said stripper member, and said magnetic means being arranged so that circumferential discontinuities in said flux band are limited to breaks substantially shorter than the spacing between said stripper member and said rail extension whereby said magnetic means is enabled as an incident to rotation of said chuck to withdraw workpieces individually from said magazine and accumulate them in an arcuate, substantially side by side array on said chuck face reaching to said stripper member.

13. For use with a grinding machine having opposed grinding wheels defining a grinding zone and guide means extending through the zone, an automatic high speed feeder for yieldably forcing a procession of workpieces along said guide means and comprising, in combination, a rotary magnetic chuck defining a flat annular face having a smooth surface, driving means connected to said chuck, an elongated magazine for containing a stack of workpieces and having a gate end thereon disposed in contiguous spaced relation to said chuck face at a location thereon radially inward of the periphery thereof, an arcuate arrangement of magnetic means disposed contiguous to said chuck face and emitting beyond said face a substantially continuous band of magnetic flux reaching across said magazine gate end and extending circumferentially therefrom along said face, a stationary elongated stripper member disposed in contiguous overlying relation to said face at a position thereon circumferentially removed from said magazine gate end, said stripper member being curved reversely to the periphery of said annular face and extending obliquely across said face beyond said periphery thereof from a radially inward portion of said face, stationary arcuate backing rail means disposed in overlying relation to a circumferential segment of the periphery of said chuck face between said magazine gate and said stripper member, extension means on said rail curving reversely away from said chuck periphery

in spaced complementary relation to said stripper member, and the outer ends of said extension means and said stripper member being adapted for connection to the grinding machine guide means.

14. A high speed continuous feed grinder comprising, in combination, a pair of opposed rotary abrasive wheels defining a grinding zone for finishing opposite surfaces of workpieces upon a single pass therethrough, workpiece guide means comprising a pair of spaced parallel guides extending through said zone, a rotary disc-like chuck defining a flat annular face having a smooth surface perpendicular to said chuck axis, driving means connected to said chuck, an elongated magazine for containing a stack of workpieces and having a gate end thereon disposed in contiguous spaced relation to said chuck face at a location thereon radially inward of the periphery thereof, an annular group of permanent magnets fixed in said chuck and emitting beyond said chuck face a substantially continuous annular band of magnetic flux reaching across said magazine end gate and extending circumferentially around said face, a stationary elongated stripper member disposed in contiguous overlying relation to said face at a position thereon circumferentially removed from said magazine gate end, said stripper member extending obliquely across said face beyond said periphery thereof from a radially inward portion of said face, and means connecting the outer end of said stripper member to said workpiece guide means.

15. An automatic high speed feeder for yieldably forcing a procession of workpieces along a path defined by a pair of vertically spaced complementary guides, said feeder comprising, in combination, a disc-like chuck mounted for rotation about a horizontal axis and having a smooth flat annular face perpendicular to the chuck axis, an elongated magazine shaped to contain a stack of workpieces and having a gate outlet on one longitudinal end thereof spaced a predetermined distance from the vertical face of said chuck and disposed in opposing relation thereto at a position thereon radially within the

peripheral edge of the face, said magazine being inclined upwardly from said gate end, an arcuate backing rail overlying a circumferential segment of the periphery of said chuck face extending generally from said magazine gate, an elongated extension connected to said backing rail and adapted to be connected to one of the complementary guides, a workpiece stripper member adapted to be connected to the other of the complementary guides and extending into overlying oblique relation to said chuck face in spaced complementary relation to said rail extension on the radially inward side thereof relative to said chuck, and a plurality of permanent magnets imbedded in said chuck in an annular group and emitting magnetic flux outwardly of said chuck face in an arcuate band reaching across said magazine gate end and extending circumferentially around said face under said stripper member, said magnets serving as an incident to rotation of said chuck to withdraw workpieces individually from said magazine and accumulate them in an arcuate, substantially side by side array on said chuck face reaching to said stripper member.

HAROLD O. CADMAN.

References Cited in the file of this patent

UNITED STATES PATENTS

Number	Name	Date
687,931	Barr	Dec. 3, 1901
751,791	Haskins	Feb. 9, 1904
962,030	Kirkgaard	June 21, 1910
1,358,725	Gaynor	Nov. 16, 1920
1,414,522	Morgan	May 2, 1922
1,451,268	Morgan	Apr. 10, 1923
1,519,417	Payne	Dec. 16, 1924
1,548,563	Spencer	Aug. 4, 1925
1,628,618	Spencer	May 10, 1927
1,682,925	Miller	Sept. 4, 1928
1,983,471	Kramer	Dec. 4, 1934
2,179,625	Groden	Nov. 14, 1939
2,347,023	Beechlyn	Apr. 18, 1944

FOREIGN PATENTS

Number	Country	Date
279,089	Germany	Oct. 9, 1914