Oct. 13, 1953 M. L. TURNER ET AL 2,655,152

BLOOD SAMPLING APPARATUS

Filed Jan. 30, 1951

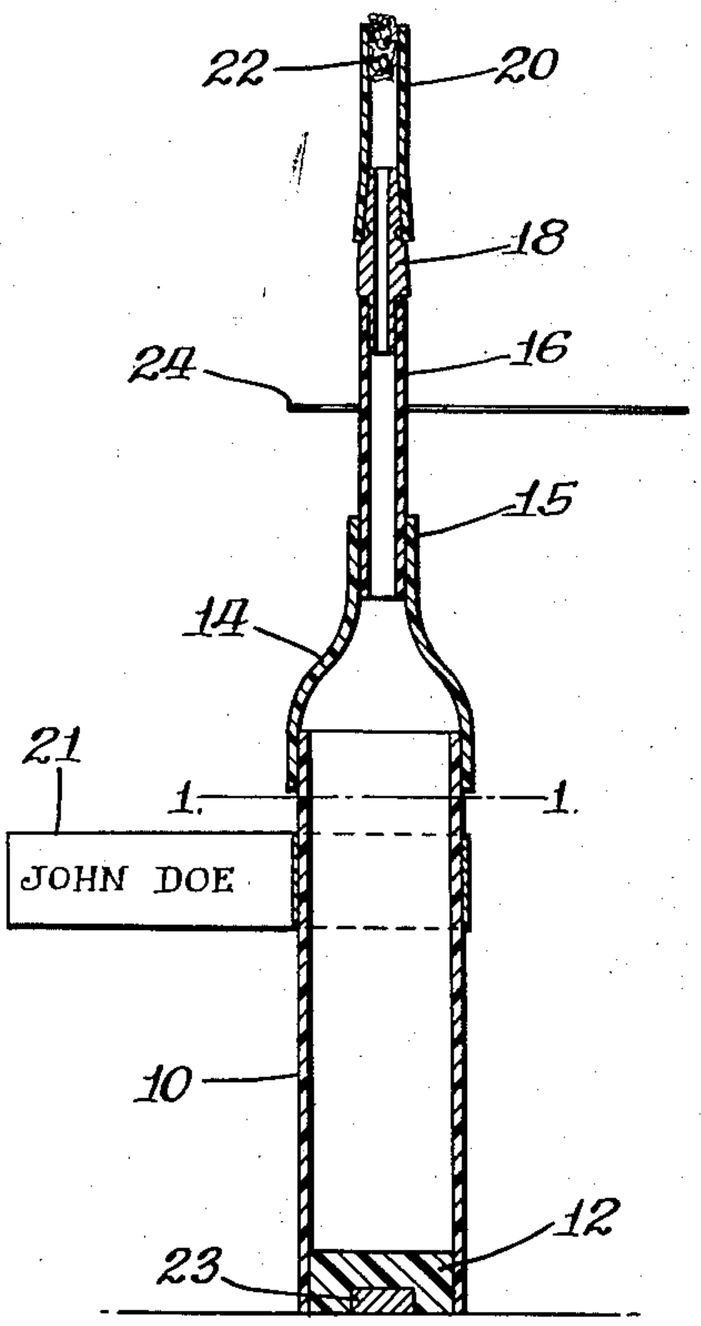

Fig. 1.

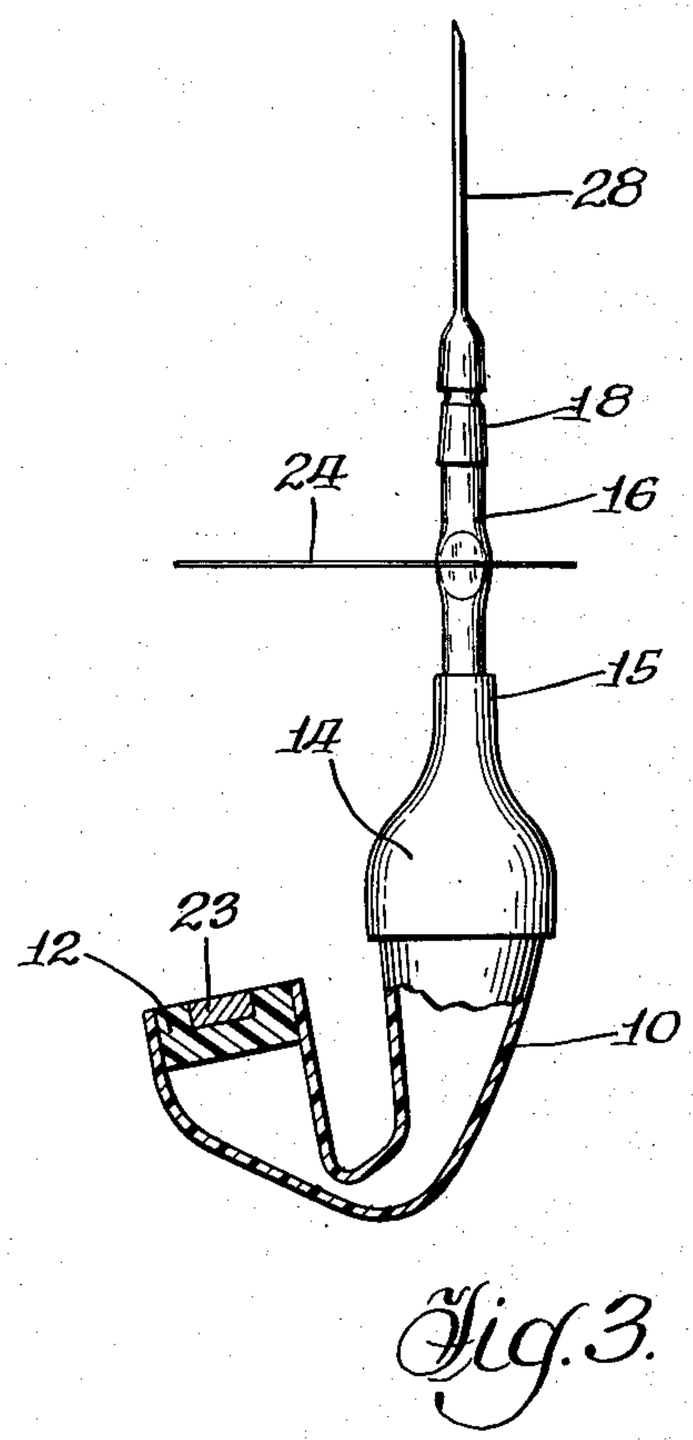

Fig. 3.

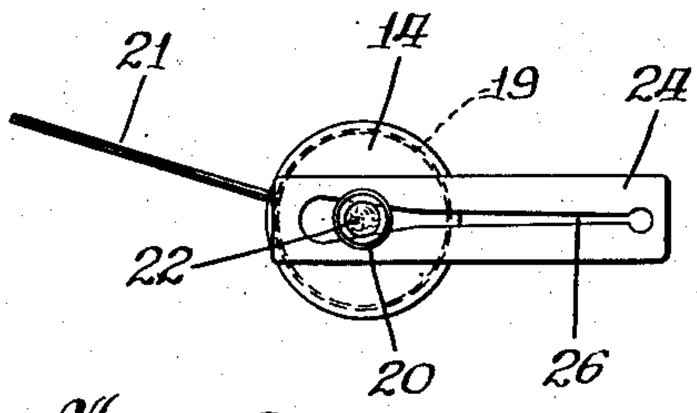

Fig. 2.

INVENTORS.
Milton L. Turner
Robert F. McGrew
BY
Albert E. Knauf
Atty.

Patented Oct. 13, 1953

2,655,152

UNITED STATES PATENT OFFICE

2,655,152

BLOOD SAMPLING APPARATUS

Milton L. Turner, Towson, Md., and Robert F. McGrew, Waukegan, Ill., assignors to Abbott Laboratories, North Chicago, Ill., a corporation of Illinois

Application January 30, 1951, Serial No. 208,561

4 Claims. (Cl. 128—276)

1

This invention relates to blood sampling apparatus, and more particularly to a disposable, unitary, plastic blood sampling unit.

Included among the objects and advantages of the present invention is a disposable syringe for collecting a sample of blood, which syringe also functions as a dropper, a centrifuge tube and a test tube. Further, the device is a sterilized unit package adapted for one and only one blood sample.

The general apparatus used heretofore for blood sampling, consisted mainly of a glass hypodermic syringe, and several test tubes including centrifuge tubes, test tube racks, medicine droppers, etc. The glass syringe normally had a detachable hypodermic needle, and since the two were used to draw blood from the patient, they had to be autoclaved with steam or boiled in water to insure sterility. Under the constant temperature changes from such sterilization, the glass syringes were only usable for about 20 samplings. Furthermore, the extensive handling of the syringes and tubes for washing, sterilizing, and so forth, including a large percentage of breakages, made the procedure unduly expensive.

A major disadvantage of the common blood sampling method is the transmittance of viral diseases, such as hepatitis, from patient to patient due to faulty sterilization. Few medical offices or laboratories are equipped with high pressure steam autoclaves capable of giving adequate sterilization of the equipment to prevent the transmitting of such viral diseases.

Generally, the present invention comprises a transparent, or at least a translucent, resilient plastic tube having one closed end, and an outlet at the opposite end, and means on the outlet available for directing a blood sample into the tube.

The device of the invention and the mode of operation thereof may be more fully understood by reference to the following description thereof, and the accompanying drawings, in which:

Figure 1 is a vertical sectional view of a device according to the invention;

Figure 2 is a plan view of the device shown in Figure 1; and

Figure 3 is an elevation of a device according to the invention in one operative position.

The blood sampling device illustrated comprises a main tube body 10 of resilient, clear extruded plastic, having walls sufficiently strong to resume normal shape after being distorted. One end of the tube 10 is closed by a cylindrical plug 12, sealed therein by heat or solvent. The opposite end of the tube 10 is closed by cap 14 which is

2

likewise sealed onto the tube. The cap 14 tapers to a small outlet neck 15, into which is sealed a short section of resilient extruded plastic tubing 16. A tubing clamp 24 is placed on the tubing 16, and a needle adapter 18 is sealed on the outer end of the tubing 16. A small tubular cap 20 fits over the needle adapter, and the end thereof is closed by a piece of sterile cotton 22. The tubing clamp 24 as shown is a thin piece of metal having a tapered slot 26 available for pinching the tube.

After assembly, the device is sterilized and packaged in a suitable container for shipment to a point of use. In operation, the sampling device is bent or folded double, as indicated in the configuration of Figure 3, and the tubing clamp 24 is moved to force the tubing into the narrow end of the slot 26, closing the tubing. In the distorted shape, the volume of the tube 10 is materially decreased. Closing the outlet tubing while the volume is thus decreased and releasing the main tube leaves a partial vacuum in the sampling device. The cap 20 is then removed, and a hypodermic needle 28 is attached to the needle adapter 18. The needle is then inserted into a patient's vein, and the tubing clamp is slowly moved to open position. The partial vacuum of the device assists in drawing blood from the patient's vein into the sampler.

Alternatively, without any pinch clamp, the user can merely double up the tube, as indicated in Figure 3, and hold it inside his hand, collapsed by manual pressure, while the needle is inserted. Then it is only necessary to release the pressure on the body 10 to initiate the withdrawal of blood.

When sufficient blood has been drawn into the sampler, the pinch clamp is again moved to closed position, and the needle withdrawn from the patient's vein. The needle is disassembled from the device, and the device may be sent to the laboratory for blood testing.

Where required, the clamp in the device may be opened, the sampling unit inverted, and by gently squeezing the main tube 10, drops of blood may be dispensed where desired, as for samples for various blood tests. The whole unit may be placed in a centrifuge for separating the blood cells from the plasma. With or without centrifuging, the top may be severed along line 1—1, leaving a small plastic test tube which will stand upright, due to the square base formed by the plug 12. A small weight 23 may be embedded in the bottom of plug 12 to increase stability.

Especially in sizes up to 20 ml., with commercial plastic tubing of an inside diameter of the order of magnitude of 5/8 of an inch and a wall thick-

ness of .05 of an inch, a simple tube has enough mechanical strength to exert a substantial suction and expedite the flow of blood into the device so that the time required to take the sample can be substantially reduced.

In a large hospital where many samples need to be taken, the devices can be picked in individual boxes or in sets of a dozen or more, separated by paper partitions, each device carrying an identification tab affixed thereto. Such a tab may be a mere strip of paper 19, with a little adhesive on one side, wrapped around the body 10 near the top, with a portion projecting as indicated at 21. For packaging, the projecting portion 21 can be conveniently wrapped around the body.

Thus the operator pulls one of the devices out of the carton, writes on the tab such identifying indicia as may be desired, fills the device with the patient's blood and seals the filled container with the pinch clamp 24. The container is then a non-breakable, completely identified unit, which can be put back in the original package from which it is withdrawn or accumulated in a pocket or basket and delivered to the laboratory, fully identified and ready for processing.

In the laboratory, each of the devices can be put into a centrifuge without removing the tab; centrifuged, cut off along the line 1—1 and placed upright on a laboratory bench, where it will stand firmly while the laboratory worker makes any desired tests and inspection and fills out a report for the use of a medical staff.

Others may readily adapt the invention for use under varying conditions of service, by employing one or more of the novel features disclosed or equivalents thereof. As at present advised with respect to the apparent scope of our invention, we desire to claim the following subject matter.

We claim:

1. A fluid sampling and dispensing device of the character described, comprising: a substantially transparent, cylindrical, tube of resilient plastic material; a plastic disc substantially normal to the axis of said tube and closing one end of said tube to define, with the encircling tube end, a plane standing base; a cap closing the other end of said tube; said cap having a large portion encircling said tube and sealed thereto; a tapered portion and a coaxial neck of relatively small diameter extending away from said tube; a length of small-diameter flexible plastic tubing telescoped in said neck; said tubing being the only inlet and outlet for said tube; a clamp on said tubing for closing said tubing; an adapter for hypodermic needles affixed to the free end of said tubing; and a protective cover over said needle adapter; the entirety of said device capable of being sterilized; said tube exerting a substantial suction when expanding after being deformed, thereby assisting the flow of fluids into said body.

2. A disposable blood sampling device of the character described, comprising; a substantial cylindrical tube of deformable resilient plastic material completely closed at one end, the other end of said tube partially closed with a tapered axial outlet therethrough extending away from said tube, a length of small diameter flexible plastic tubing extending outwardly from the said axial outlet, said tubing having a hypodermic needle adapter means on the outer end thereof and being the only inlet and outlet for said tube, and providing unobstructed access to the interior of said tube, a clamp on said tubing for closing said tubing, and a protective cover over said adapter means to prevent bacterial contamination after said device is sterilized, said tube returning to substantially its original shape and exerting a suction force after being compressed, thereby assisting the flow of blood into said tube.

3. A disposable blood sampling device of the type described, comprising; a resilient cylindrical tube having one end sealed closed and the other end partially closed with an axial outlet of smaller diameter than the said tube extending therethrough and projecting outwardly therefrom, said axial outlet providing unobstructed communication with the interior of said tube, a length of flexible tubing extending outwardly from the end of said outlet, said tubing having at the outer end thereof means for detachably securing a hypodermic needle thereto for communication with a fluid source, and a protective cap mounted on said means to prevent bacterial contamination, said tube returning to substantially its original shape and exerting a suction force after being compressed, thereby facilitating the collection of the fluid sample.

4. A device according to claim 3 wherein the length of flexible tubing has mounted thereon intermediate the ends thereof, a tubing clamping means, said clamping means being adjustable to form a gas impermeable barrier between the interior of the said tube and the surrounding atmosphere while the tube is compressed; thereby retaining within the said tube the partial vacuum formed when the tube returns to its original shape after being compressed.

MILTON L. TURNER.
ROBERT F. McGREW.

References Cited in the file of this patent

UNITED STATES PATENTS

Number	Name	Date
1,124,285	Brown	Jan. 12, 1915
1,668,588	Greeley	May 8, 1928
2,290,857	Booge et al.	July 28, 1942
2,404,316	Sack	July 16, 1946

FOREIGN PATENTS

Number	Country	Date
573,611	Great Britain	Nov. 28, 1945