Nov. 11, 1952 E. G. LINDER 2,617,841

INTERNAL-COMBUSTION ENGINE IGNITION

Filed Jan. 3, 1949

Fig. 1

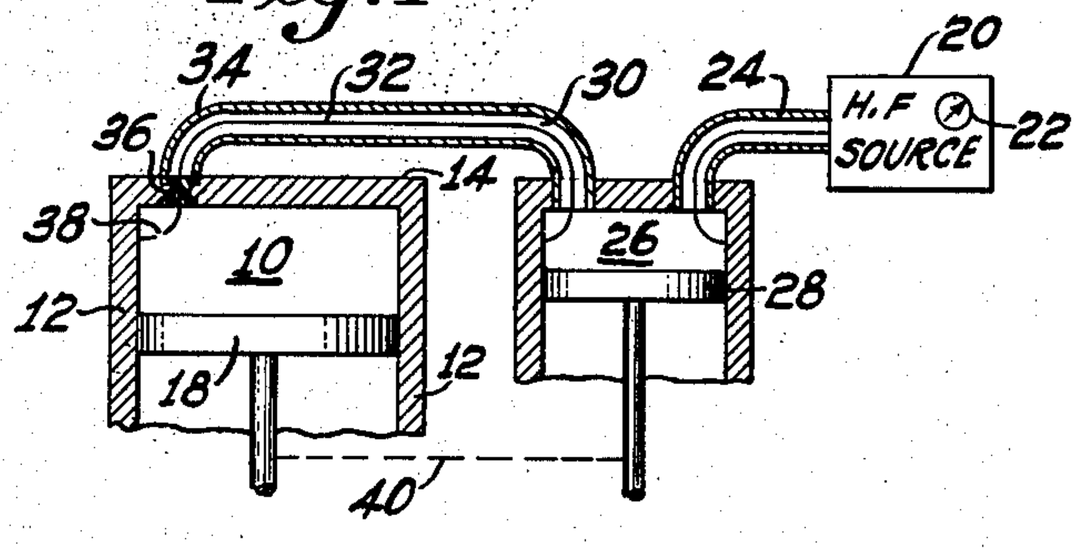

Fig. 2

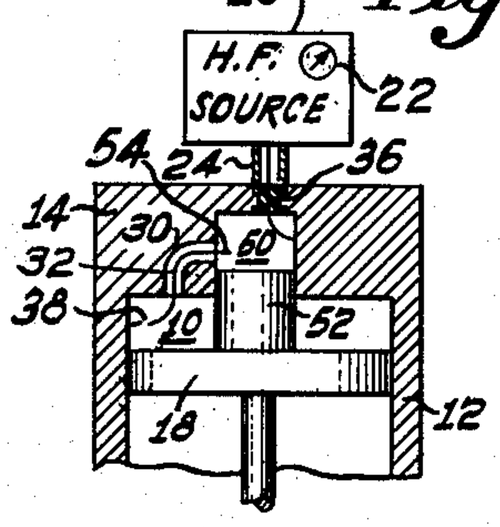

Fig. 3

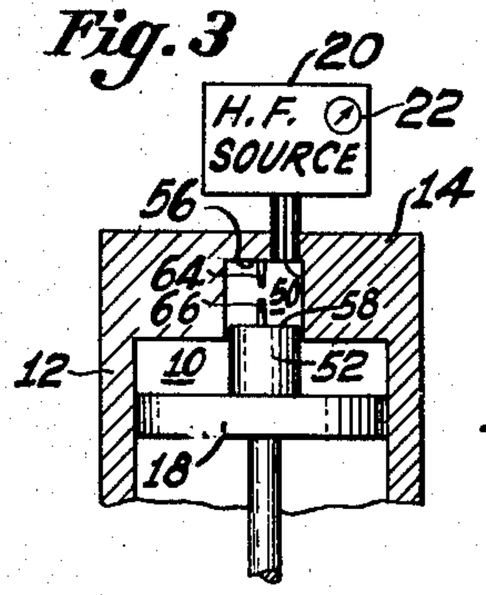

Fig. 4

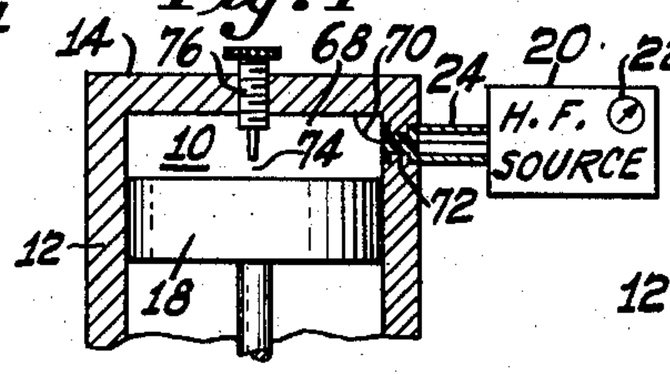

Fig. 5

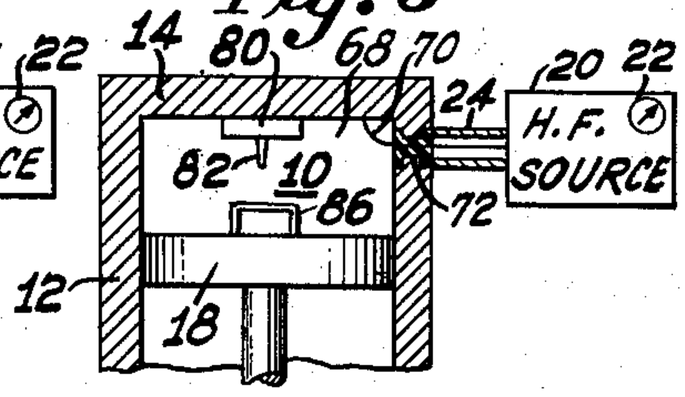

Fig. 6

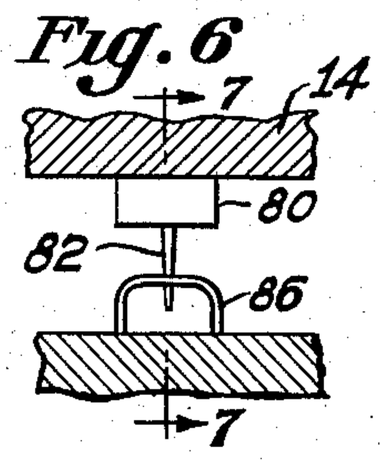

Fig. 7

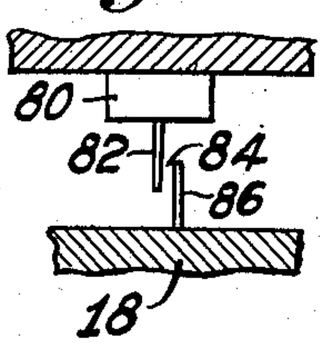

Fig. 8

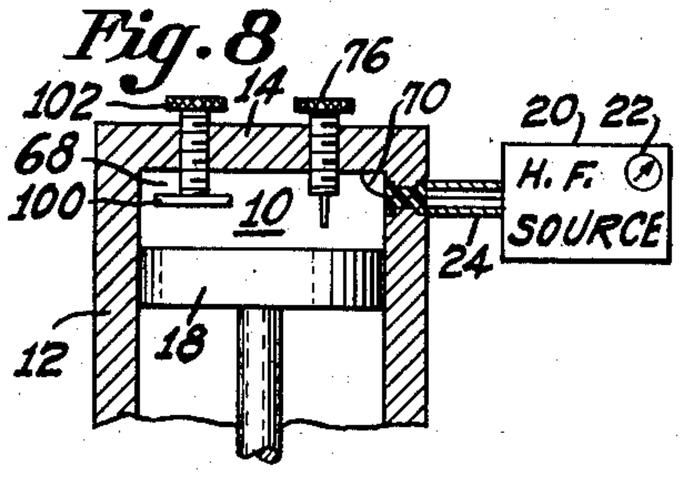

Fig. 9

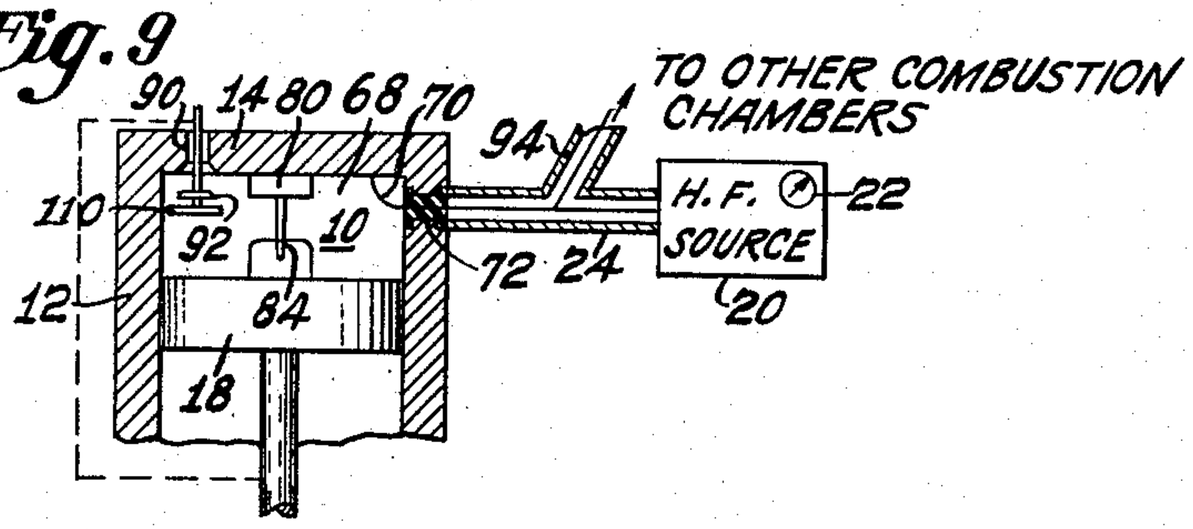

INVENTOR
Ernest G. Linder
BY
J. L. Whittaker
ATTORNEY

Patented Nov. 11, 1952 2,617,841

UNITED STATES PATENT OFFICE

2,617,841

INTERNAL-COMBUSTION ENGINE IGNITION

Ernest G. Linder, Princeton, N. J., assignor to Radio Corporation of America, a corporation of Delaware

Application January 3, 1949, Serial No. 68,798

35 Claims. (Cl. 123—148)

1

This invention relates generally to ignition systems for internal combustion engines and more particularly to ignition systems utilizing voltages of ultra-high-frequency for sparking.

Ignition systems heretofore proposed employ distributors in which a contact element moving in timed relationship to the moving parts of the engine, for example, the piston, completes a circuit to couple the sparking energy to a spark plug or other device at the proper instant of time to fire the combustion mixture in the combustion chamber of the engine. Such a conventional system requires precise gearing mechanism, often of a complicated nature. The frequencies of the spark are often not the most efficient which may be used in sparking through the gaseous combustion mixture. Adjustment of the timing is difficult.

It is an object of the invention to provide a novel ignition system and method of ignition of an internal combustion engine.

It is another object of the invention to improve the sparking of an internal combustion engine.

A further object of the invention is to simplify the ignition system of an internal combustion engine, and particularly to simplify the mechanical features of such a system.

Another object of the invention is to provide an ignition system and method in which the timing of the sparking may be adjusted with only minor mechanical adjustment, and further, in some embodiments, without mechanical adjustment at all.

These and other objects, advantages, and novel features of the invention will become more fully apparent from the following description when taken in connection with the accompanying drawing in which like reference numerals refer to parts which may be the same and in which:

Fig. 1 is a cross-sectional view illustrating embodiment of the invention employing a cavity resonator physically separated from an engine's combustion chamber;

Fig. 2 is a cross-sectional view illustrating another embodiment of the invention in which a cavity resonator has a movable wall portion directly connected to the piston of the engine combustion chamber;

Fig. 3 is a cross-sectional view of still another embodiment in which a cavity resonator is also

2

the initial firing chamber and may communicate with the combustion chamber;

Fig. 4 is a cross-sectional view of a further embodiment of the invention in which the cavity resonator and the combustion chamber have identical walls and employing an adjustable field concentrating point or probe to provide increased electromagnetic field gradients in the spark-gap thereby assuring easy sparking;

Fig. 5 is a cross-sectional view of yet another embodiment of the invention utilizing, in addition to field concentrating projections, a capacitive projection to provide greater cavity resonator variation of resonant frequency with piston motion;

Fig. 6 is a portion of the cross-sectional view of the arrangement of Fig. 5, but with the engine piston at or near the point at which sparking occurs;

Fig. 7 is a cross-sectional view of the arrangement of Fig. 6 taken along the lines 7—7 to illustrate more clearly the field concentrating projections;

Fig. 8 is a cross-sectional view of an embodiment of the invention employing both an adjustable field concentrating probe and an adjustable capacity projection; and

Fig. 9 is a cross-sectional view of still another embodiment of the invention in which the cavity resonator and combustion chamber walls are identical and in which a valve closure affects the resonator Q and tuning permitting the system to operate without concurrent firing of cylinders without any mechanical distributor whatever even if the engine be a four-cycle engine.

In accordance with the invention, the foregoing objects are achieved by providing for an internal combustion engine having a combustion chamber with a movable wall member, a high-frequency circuit having a spark gap in said chamber and comprising a tuned circuit having a tuning element movable in timed relation with said engine member. The invention contemplates that an internal combustion engine be fired by the method comprising the steps of generating high-frequency energy, applying the energy to a resonator or resonant circuit, and tuning to the frequency of this energy the resonant circuit in timed relation with the movable wall member to cause a spark to leap a spark-gap in the circuit at reso-

nance of the resonator. In accordance with a further feature of the invention, the resonant circuit may comprise a cavity resonator having a movable tuning element directly connected to a piston of the chamber. In accordance with still another feature of the invention, part of the combustion chamber walls are the walls of the cavity resonator, and, moreover, the chamber and resonator walls may be the same. A further feature of the invention recognizes that there is an optimum sparking frequency for a spark-gap through a gas mixture. Therefore, I provide tuning of the generator and tuning and timing of the resonator so that not only does the sparking occur in the proper timed relationship, but also at the optimum frequency to assure an ample firing spark. In accordance with still a further feature of the invention, the exhaust valve is placed to lower appreciably the cavity resonator Q. Thus sparking when the exhaust valve is closed, which is the case in most engines during the compression and firing time of the cycle, is allowed, while sparking during the exhaust and intake cycles is effectively inhibited. The sparking in one chamber, at a time when sparking is desired in another companion chamber might prevent the desired spark in that companion chamber at the proper time. Further, therefore, in accordance with another feature of the invention, the opening of a valve may so affect the tuning of the cavity resonator comprising at least a portion of the combustion chamber that no two combustion chambers can be sparked at the same time.

Referring now more particularly to Fig. 1, an internal combustion engine has a cylindrical combustion chamber 10 with walls 12, 14, and 18, the latter wall 18 being movable and being the piston head of the engine. A showing of the ports and valves is omitted from the drawing wherever not required for a clear understanding of the invention. A high-frequency source of electrical energy 20 preferably of adjustable frequency, as by a dial 22, is coupled by a transmission line, in this instance shown as a coaxial transmission line 24, to a resonant circuit or resonator, in this instance cavity resonator 26. Cavity resonator 26 includes a movable tuning element, the piston-like wall member 28. Resonator 26 is also coupled to transmission line 30 the central conductor 32 of which terminates at the wall 12 connected to the outer conductor 34 of line 30 through wall 14 of combustion chamber 10. Conductor 32 passes through wall 14 through an insulating seal of dielectric material 36 which closes the chamber 10 against loss of compression at the entry of conductor 32. Conductor 32 has, however, a gap 38 which is the spark-gap of the ignition system for combustion chamber 10. Pistons 18 and 28 are linked by a mechanical coupling or linkage 40 which brings both pistons to a predetermined position relative to each other on the firing stroke of the piston. As will appear more fully hereinafter, the high-frequency source 20 may be actuated by a distributor arrangement which, however, in accordance with the invention, then serves an entirely different function from that of the usual distributor arrangement. On the other hand, the usual distributor arrangement may be entirely omitted to advantage as will appear more clearly hereinafter.

In operation, high frequency source 20 is excited to supply high-frequency energy to cavity resonator 26. The energy thus supplied is thereby coupled to line 30 through the cavity resonator 26. The amount of energy thus coupled to line 30 depends on the tuning of resonator 26 and is a maximum when the cavity resonator is tuned to the frequency of the high-frequency source 20. It will be understood that source 20 may, if desired, include buffer stages or other isolating means, to prevent the cavity resonator from shifting the frequency thereof to any appreciable degree. The travel of piston 28 may be adjusted so that the cavity resonator is tuned substantially to the frequency of source 20 at the moment when a spark is desired at spark-gap 38. The amount of energy supplied the resonator 26 is then adjusted so that sparking is effected when the point of resonance is reached. It will now be appreciated that the source 20 may be adjusted in frequency to provide an adjustment of the time of sparking in relation to the time of travel of piston 18 of chamber 10, so that adjustment by means of adjusting the relative movements of the piston 18 and piston-like member 28 may be dispensed with. The Q of cavity resonators such as resonator 26 may be made exceedingly high, say of the order of 10 to 20 thousand. The frequency to which the resonator is tuned is thus sharply and definitely dependent on the position of tuning member 28. Hence the point of travel of tuning member 28 at which the spark will jump across spark-gap 38 may be determined with great definitude and sharpness with respect to the position of piston 18.

A further refinement of the invention may be effected by causing chamber 10 itself to become electromagnetically resonant at the desired frequency at the desired point of its travel for sparking. The field strength built up to break down the spark-gap 38 across the terminals of conductor 32 defining the spark-gap is thereby increased at resonance. This may be accomplished, for example, by suitably relating the sizes of cavity resonator 26 and chamber 10 to be of the same size if they are excited in the same mode of oscillation. It will be understood by those skilled in the art that the modes of oscillation chosen are preferably those which minimize currents between the fixed and movable walls of the cavity resonator or resonators to avoid the lowering of the Q and the requirement of good electrical contact at high frequencies between the walls movable with respect to each other. The cavity resonator walls may be of high conductivity, for example, silver-plated. The arrangement of Fig. 1, just described, having a separate cavity resonator has the advantage that carbon and other extraneous material does not deleteriously affect the high Q of this separate resonator. However, this arrangement does require a separate mechanical linkage.

Referring now more particularly to Fig. 2, a cavity resonator 50 is coupled to the oscillator 20 through transmission line 24 sealed into the engine wall 14 shown enlarged to make room for the cavity resonator. The cavity resonator 50 is coupled to the combustion chamber 10 by transmission line 30 which passes through wall 14 in this case. The central conductor 32 of line 30 may be supported by means well known which may provide free communication for gases between cavity resonator 50 and chamber 10. Thus differential pressures are avoided. However, such free communication may be prevented if access of gases to resonator 50 may adversely effect wall conductivity. A central cylindrical

projection 52 from piston 18 fits the walls of cavity resonator 50 the cavity of which is hollowed out of wall 14. Projection 52 may form only a loose fit with the side walls of the hollowed portion if the mode of oscillation is properly chosen, for example, to be the TE_{011} mode having circular electric lines of force and exceptionally high Q. Thus the direct electrical contact of projection 52 with the side walls of cavity resonator 50 becomes unimportant. The coupling of transmission line 34 to cavity resonator 50 is by a probe 54.

The arrangement of Fig. 2 operates in a manner similar to that of Fig. 1. Source 20 may be tuned to determine the point of travel of projection 52 at which the spark gap 38 fires, as will be clear to those skilled in the art of electronics and cavity resonators. Further, the dimensions of cavity resonator 50 may be chosen to provide the desired resonance at the desired point of travel at a frequency to conform to the optimum sparking frequency for the gaseous combustion mixture in chamber 10. That there are such optimum frequencies is evidenced by the article by Herlin and Brown in the Physical Review, vol. 74, page 291 (1948), and one appropriate to a reasonably dimensioned cavity resonator 50 may readily be chosen, as a general rule. The arrangement of Fig. 2 has the advantage that no separate gearing or mechanical linkages are required, since the tuning member of cavity resonator 50, in this instance the projection 52, is directly connected mechanically to the movable wall member of combustion chamber 10, that is, to the piston 18.

Referring now to Fig. 3, which is a cross-sectional view of an embodiment of the invention similar in some respects to that of Fig. 2, the cavity resonator 50 is not coupled through a separate transmission line to combustion chamber 10, but is itself an auxiliary combustion chamber. Cavity resonator 50 is preferably excited in the dominant TM mode, in which event a strong electric field is created between the central portions 56 and 58 of the circular end walls respectively of the cylindrically shaped resonator. Central portions 56 and 58 then become the terminals of a spark-gap which is the space between them. These terminals and the spark-gap between them are obviously in circuit with the cavity resonator 50, being a part of the walls thereof. In this embodiment I prefer to add pointed metallic projections 64 and 66 which approach in near contact with each other at the time for sparking and which extend from central portions 56 and 58. The projections 56 and 58 are then the terminals between which is the spark-gap. These projections 56 and 58 tend to increase the field gradient in the spark-gap between them and thereby aid a break-down of the gas at resonance. Cavity resonator 50 and combustion chamber 10 communicate with each other freely, if not at the moment of firing, then shortly thereafter in the engine cycle, depending on the design and mode of excitation of cavity resonator 50, the compression ratios desired, and the degree of electrical contact required between projection 52 and the side walls of cavity resonator 50. Thus combustion occurs in both chambers. Therefore, a portion of combustion chamber 10 is identical with cavity resonator 50. Projection 52 may be considered a part of the piston 18. Time of sparking in relation to piston position again may be controlled by controlling the frequency of source 20.

Referring now more particularly to Fig. 4, which is a cross-sectional view of an embodiment

of the invention in which cavity resonator 68 and combustion chamber 10 have identical walls. Coaxial transmission line 24 is coupled to the cavity resonator by a coupling loop 70. The central conductor is passed through dielectric sealing material 72. If sufficiently high frequencies are used, the central conductor may be omitted, the outer conductor of transmission line 24 having suitable dimensions to act as a waveguide transmission line and appropriate coupling means then being substituted for coupling loop 70 and the dielectric sealing material sealing the aperture in wall 12 leading to the waveguide. There is a spark-gap 74 between the point of a screw 76 in wall 14 of chamber 10, and the central portion of cylinder 18. This permits adjustment of the gap with a certain amount of tuning of the cavity resonator. Time of sparking may be controlled, as before, by adjustment of the frequency of source 20. Moreover, in a multi-cylinder engine, all combustion chambers may be resonated by adjustment of screw 76 at the corresponding positions of piston 18, after which the timing of the sparking may be effected by frequency control dial 22 for the engine as a whole. This result may be reached wherever the cavity resonator may be tuned separately from the moving tuning member.

Referring now more particularly to Figs. 5, 6 and 7 which are respectively a cross-sectional view of still another embodiment of the invention and partial cross-sectional views thereof, combustion chamber 10 is again identical with cavity resonator 68. The construction and operation is similar to the arrangement of Fig. 4, except that there is no screw 76. Instead, a capacitive projection 80 is attached to the wall 14 of chamber 10. From capacitive projection 80, which may be cylindrical as shown, there is a pointed metallic probe 82 projecting centrally thereof which tends to increase the gradient of the electric field in the vicinity of the point and across the spark-gap 84 (as seen in Fig. 7) of which probe 82 is one terminal. The other terminal of spark-gap 84 is a metallic wire-like loop 86. Loop 86 is arranged in such a manner that in the sparking position of the parts as illustrated by the partial cross-sectional view of Figs. 6 and 7, the probe 82 and loop 86 are substantially spaced equal distances from each other throughout the time of travel of piston 18 during which the cavity resonator 68 (identical with combustion chamber 10) approaches and recedes with the travel of piston 18 from its condition of resonance. The purpose of the capacitive projection 80 which is in capacitive relationship particularly with piston 18 is to cause the capacity between the end walls of cavity resonator 68 to change with greater rapidity with the motion of piston 18 than would be the case were the projection 80 absent. Therefore, the frequency of resonance changes with greater rapidity with motion of piston 18, and consequently the position of the piston at which sparking occurs across spark-gap 84 for a definite frequency of source 20 is defined with greater accuracy. The arrangement of probe 82 and wire 86 is such that the spark-gap between these terminals is of a fixed distance throughout the range of motion of piston 18 within which it is expected that sparking is desired. Consequently, sparking is controlled and determined more completely by the motion of the piston 18 and the resonance of cavity resonator 68 than by any factor which might include the spacing of the terminals across spark-gap 84.

Referring now more particularly to Fig. 8, which is a cross-sectional view of an embodiment of the invention. Combustion chamber 10 and the cavity of cavity resonator 68 occupy the same space. A plate 100, having considerable capacity with piston 18, is adjustable by a screw 102. Screw 76, with a pointed probe end, similar to screw 76 of Fig. 4 but differently placed, is also threaded through wall 14. The probe may be adjusted for a desired spark-gap spacing and serves as one terminal defining the spark-gap and being coupled to cavity resonator 68 through the walls thereof. The other terminal of the spark-gap is a portion of the cavity resonator wall formed by piston 18. Capacitive plate 100 may be adjusted to give sparking at a desired frequency, the probe being adjusted for a desired spark-gap length. The probe increases the field gradient across the spark-gap. The position of the probe screw 76 is determined largely by the field configuration of the mode of excitation of cavity resonator 68. As understood by those skilled in the cavity resonator art, there may well be more than one preferred position among which a choice may be made as desired. For a different adjustment of probe 76, a different adjustment of plate 100 is required to resonate cavity resonator 68 at a desired frequency. The operation of the device and the advantage of plate 100 as a capacitive projection from wall 14 will be understood from what has been said heretofore. Source 20 may be adjusted in frequency to cause sparking at a desired point in the engine cycle.

Thus far, no particular comment has been made upon the part which a distributor system may or may not play in the practice of the invention. As the invention relies upon the tuning of a resonator for causing a spark across the spark-gap at the desired instant of time, it is clear that a distributor in the ordinary sense is not required. However, a distributor may be used, if so desired, particularly in multi-cylinder four-cycle engines, to provide energy to a particular combustion chamber of such an engine only during an interval of time which starts immediately before and ends after the time at which sparking is to occur. In prior systems, sparking energy is applied at the precise time or instant that firing of the spark gap is desired. However, in the system of the invention, energy is applied by means of a permanent connection such as coaxial line 24 of Fig. 1 or by means of a suitable distributor continuously from before to the time at which the motion of the tuning element tunes the resonant circuit such as chamber 26 of Fig. 1 to the frequency of the applied energy. Such an arrangement as one of those proposed herein does not rely on the distributor for the time of sparking in relation to the firing cycle except in a secondary sense. Such a distributor system may be desirable, however, in order to prevent a non-firing combustion chamber the piston of which reaches the same relative position at the same time as the piston of a firing chamber, from sparking and its being fired at the same time as the chamber which is at the beginning of its firing stroke. However, I can dispense even with such a distributor. For this purpose a port of the engine which is closed at the time sparking is desired and open at the corresponding piston position when sparking is not desired and suitably to affect the Q of the cavity resonator when open. Referring now more particularly

to Fig. 9, which is a cross-sectional view of such an arrangement similar in most respects to that of Fig. 5, and bearing similar reference numerals, there is a port 90 in wall 14 which may be the exhaust port of combustion chamber 10. Valve head 92 serves as a closure for exhaust port 90. The entry of exhaust port 90 into combustion chamber 10 (identical with cavity resonator 68) is located, having due regard to the mode of excitation of cavity resonator 68, so that when the valve 92 is open, the opening of port 90 in the cavity resonator 68 causes the Q of cavity resonator 68 to be appreciably decreased. The appropriate position in a wall of resonator 68 for particular modes of excitation will be well understood by those skilled in the cavity resonator art. The position of the port is preferably chosen to interrupt the heaviest current flow in the resonator walls consistent with the requirements for its other function in exhausting gases. Consequently, when the valve head 92 is in the open position, the Q of cavity resonator 68 is low compared to the Q of the cavity resonator when valve head 92 is in the closed position and serving as a closure for combustion chamber 10 at the end of the compression stroke of piston 18 and just at the time when sparking is to occur across gap 84. It will now be apparent that if an engine includes a plurality of combustion chambers such as combustion chamber 10, all being similar, that on the termination of the exhaust stroke of one of the chambers 10, the piston 18 and valve head 92 will be in somewhat the position as shown in Fig. 9, with the exhaust port 90 open and the Q of cavity resonator 68 decreased. Another piston 18 will then be in a similar position and the parts of combustion chamber 10 will be similarly located except that valve head 92 will be in a closed position, if the engine is of the customary four-cycle multi-piston type. The combustion chamber 10 having valve head 92 closed, however, will have a comparatively high Q and accordingly the energy from source 20 which may be coupled simultaneously to all the cavity resonators 68 (and chamber 10) of the multi-cylinder engine, will cause a spark only in the spark-gap 84 of the high Q chamber, assuming that the spark-gaps are appropriately adjusted. The transmission line 24 in such an arrangement may be appropriately branched with a branch 94, for example, to lead to other combustion chambers, only one such branch being shown in Figure 8. It is not harmful, and may be helpful, if the firing chamber is fired twice, once by a spark at the usual time a few degrees before the piston reaches the top of its travel, and again as it is making the power stroke, when it again passes the critical position of resonance. However, it does not fire on the exhaust stroke when the exhaust port is open.

It will be noted that in addition to decreasing the Q of the cavity resonator 68, valve head 92 acts also as a capacitive projection which, at the time the port is open, tunes the resonator to a different frequency. In consequence, the detuning may be made sufficiently great, as by an added projection on the valve head 92, that the sparking in chamber 68 across spark-gap 84 occurs at a different time from the sparking with the port 90 closed. Thus the companion chamber is not fired at the same time. If, for example, a companion chamber timed to exhaust when piston 18 was making its compression stroke (and vice-versa) were sparked when chamber 68 was

on compression and ought to be sparked, the companion chamber might spark first. The lowered impedance across the resonator (or resonant circuit) might then draw sufficient energy or lower the resonator voltage so that the proper chamber **68** would not receive a spark. Sparking at the wrong time is not too important, except that it must not occur during the compression stroke and before the piston **18** reaches nearly to its top position.

If desired, a capacitive projection **110**, as shown in Fig. **9** may be added to the bottom of valve head **92** to accentuate the detuning effect when the port **90** is open. With or without projection **110**, the capacity is increased when the port is open. As a result, the point of resonance of resonator **68** may be sufficiently altered with respect to the position of piston **18** to prevent simultaneous sparking in a companion combustion chamber. It should be noted that in general the increased capacity as valve head **92** on opening approaches piston **18** adds to the equivalent shunt capacity of the cavity resonator **68**. Therefore, the frequency of resonance is decreased, and the piston **18** must be more nearly closed to reach the position at which the cavity resonates at the fixed oscillator frequency. The change in capacity may be made so great that the piston can reach the point of resonance only with the port closed.

It will be apparent from the foregoing that the invention provides an entirely novel means and method for timing the sparking of internal combustion engines. It will be further apparent that by these means, and the method of the invention the sparking of internal combustion engines may be made highly reliable, and without the use of any distributor, or at least without the use of a distributor or any moving parts whatever for determining the precise time of firing. The time of firing of the combustion chamber and the time of production of the sparking may be determined by a simple adjustment and which may involve no more than the simple adjustment of a dial to alter the oscillator frequency in source **20**. It will be apparent that the same source **20** may be used for all of the combustion chambers of a multi-cylinder engine or that a separate source may be used for each chamber to give separate adjustment of the sparking time in relation to piston movement. Separate adjustment of each chamber firing or sparking time may be had, if one oscillator is used in a multi-cylinder engine, by tuning each resonator which may be each combustion chamber. Then the spark may be similarly advanced or retarded in all chambers simultaneously by the frequency adjustment. Also, it will be apparent that a pulsed high frequency source may be used, the pulse frequency being sufficiently high at maximum piston speeds that a pulse is sure to occur during the resonant condition of the resonator and within the time necessary for efficient engine operation.

What I claim is:

1. In combination with an internal combustion engine having a combustion chamber with a movable wall member, a high-frequency circuit having a spark-gap in said chamber and comprising a resonant circuit having a tuning element movable in timed relation with said engine member means to apply high frequency energy to said circuit from a source of high frequency energy continuously from before to the time at which the motion of said element tunes said chamber to the operating frequency of said source, whereby the precise time of firing of said spark-gap is determined by the position of said element.

2. The combination claimed in claim 1, said spark-gap being defined by two pointed probes.

3. The combination claimed in claim 1, further comprising a source of high-frequency energy to supply the said energy, said spark-gap being defined by the space between a probe and a wire-like loop equi-distant therefrom during the interval of time before and after said tuning element tunes said resonant circuit to the frequency of the energy of said source.

4. The combination claimed in claim 1, further comprising a source of high frequency energy to supply the said energy applied by said means.

5. The combination claimed in claim 4, the frequency of the energy of said source being adjustable.

6. In combination with an internal combustion engine having a combustion chamber with a piston, a high-frequency circuit having a spark-gap in said chamber and comprising a resonant circuit having a tuning element movable in timed relation with said piston means to apply high frequency energy to said circuit from a source of high frequency energy, continuously from before to the time at which the motion of said element tunes said chamber to the operating frequency of said source, whereby the precise time of firing of said spark-gap is determined by the position of said element.

7. The combination claimed in claim 6, said resonant circuit comprising a cavity resonator.

8. The combination claimed in claim 6, said tuning element being a piston-like member having a surface exposed to the cavity of said resonator.

9. In combination with an internal combustion engine having a combustion chamber with a movable wall member, a high frequency circuit having a spark-gap in said chamber and comprising a cavity resonator having a tuning element movable in timed relation with the said engine member means to apply high frequency energy to said circuit from a source of high frequency energy, continuously from before to the time at which the motion of said element tunes said chamber to the operating frequency of said source, whereby the precise time of firing of said spark-gap is determined by the position of said element.

10. The combination claimed in claim 9, the cavity of said cavity resonator and said combustion chamber being distinct and occupying different spaces.

11. The combination claimed in claim 9, at least a portion of said combustion chamber being the cavity of said cavity resonator.

12. The combination claimed in claim 9, said tuning element being mechanically directly connected to said movable wall member.

13. The combination claimed in claim 9, said movable wall member being a piston, said tuning element being directly connected to said piston.

14. The combination claimed in claim 9, only a fractional portion of said combustion chamber being the cavity of said cavity resonator.

15. The combination claimed in claim 9, said combustion chamber and said cavity resonator having at least some walls in common.

16. The combination claimed in claim 9, said combustion chamber and the cavity of said cavity resonator being defined by the same walls.

17. The combination claimed in claim 9, said

combustion chamber and the cavity of said cavity resonator occupying the same space.

18. The combination claimed in claim 9, said movable wall member and said tuning element being the same member.

19. The combination claimed in claim 18, said movable wall member being a piston and said cavity resonator having one of the cavity walls thereof defined by said piston.

20. In combination with an internal combustion engine having a combustion chamber with a movable wall member, a high frequency circuit having a spark-gap in said chamber and comprising a cavity resonator having a tuning element movable in timed relation with the said engine member, means to apply high frequency energy to said circuit from a source of high frequency energy, continuously from before to the time at which the motion of said element tunes said chamber to the operating frequency of said source, whereby the precise time of firing of said spark-gap is determined by the position of said element, said chamber having a wall with a port therein closable by a closure, said wall with said port being also a wall of said cavity resonator, said port being opened and closed by said closure in timed relation with said movable wall member and being positioned to decrease the Q of said chamber with the port open over the Q of said chamber with the port closed by said closure.

21. The combination claimed in claim 20, said movable wall member being a piston.

22. The combination claimed in claim 20, said port being an exhaust port for said engine.

23. The combination claimed in claim 20, said engine being a four-cycle engine, said port being an exhaust port.

24. In combination with an internal combustion engine having a combustion chamber with a movable wall member, a high frequency circuit having a spark-gap in said chamber and comprising a cavity resonator having a tuning element movable in timed relation with the said engine member, means to apply high frequency energy to said circuit from a source of high frequency energy, continuously from before to the time at which the motion of said element tunes said chamber to the operating frequency of said source, whereby the precise time of firing of said spark-gap is determined by the position of said element, said chamber having a wall with a port therein closable by a closure, said wall with said port being also a wall of said cavity resonator, said port being opened and closed by said closure in timed relation with said movable wall member and being positioned to alter by its motion between open and closed positions the frequency of resonance of said resonator.

25. The combination claimed in claim 24, said closure being a valve head and having a capacitive projection to increase the frequency alteration over the alteration that would be effected without said projection.

26. The combination claimed in claim 24, said closure being a valve head, said movable wall member being a piston.

27. In combination with an internal combustion engine having a combustion chamber with a piston, a high-frequency circuit having a spark-gap in said chamber and comprising a cavity resonator the cavity of which occupies at least a portion of said chamber, said cavity resonator having a tuning element comprising said

piston and the walls thereof having a projection in a position toward which and away from which said piston travels and said projection having a highly capacitive relation to said piston means to apply high frequency energy to said circuit from a source of high frequency energy, continuously from before to the time at which the motion of said element tunes said chamber to the operating frequency of said source, whereby the precise time of firing of said spark-gap is determined by the position of said element.

28. The combination claimed in claim 27, said spark-gap being defined between terminals at least one of which is a pointed probe.

29. The combination claimed in claim 27, the position of said projection being adjustable whereby resonance of said cavity resonator and sparking across said spark-gap may occur at an optimum frequency with regard to the gas in said chamber.

30. In combination with an internal combustion engine having a combustion chamber with a piston, a high frequency circuit having a spark-gap in said chamber defined by terminals at least one of which is a pointed probe and comprising a cavity resonator the cavity of which occupies at least part of the space of said chamber, said cavity resonator having a projection in a position from which and toward which said piston travels and said projection having a highly capacitive relation to said piston, said probe extending from said projection, said piston being a tuning element for said cavity resonator means to apply high frequency energy to said circuit from a source of high frequency energy, continuously from before to the time at which the motion of said element tunes said chamber to the operating frequency of said source, whereby the precise time of firing of said spark-gap is determined by the position of said element.

31. In combination with an internal combustion engine having a plurality of combustion chambers each with wall member movable in predetermined time relation to the others, a high-frequency circuit having a spark-gap in each of said chambers and comprising a plurality of resonators one for each chamber and each resonator having a tuning element movable in timed relation with said movable wall members, and a source of high-frequency energy coupled to each said resonator means to apply high frequency energy to said circuit from a source of high frequency energy, continuously from before to the time at which the motion of said element tunes said chamber to the operating frequency of said source, whereby the precise time of firing of said spark-gap is determined by the position of said element.

32. The combination claimed in claim 31, said resonators each being a cavity resonator having walls identical with the walls of said chambers.

33. The combination claimed in clam 32, the frequency of the energy of said source being adjustable.

34. The method of producing a spark in the combustion chamber of an internal combustion engine with a movable wall member and having a resonant circuit coupled to terminals defining a spark-gap in the combustion chamber, comprising the steps generating high-frequency energy of a predetermined frequency, applying said energy to said resonant circuit, and thereafter and during application of said energy tuning the resonant circuit in timed relation with said movable member from non-resonance to reson-

ance at said predetermined frequency, to couple said resonating energy to said terminals with sufficient energy to produce a spark across the spark-gap at a time determined precisely by the moment of tuning said resonant circuit to said resonance.

35. The method claimed in claim 34, further comprising altering the frequency of the generated energy to alter the time relation of the spark with respect to the movable member.

ERNEST G. LINDER.

REFERENCES CITED

The following references are of record in the file of this patent:

UNITED STATES PATENTS

Number	Name	Date
1,401,231	Anderson	Dec. 27, 1921
2,002,114	June	May 21, 1935
2,401,489	Lindenblad	June 4, 1946
2,402,539	Eitel	June 25, 1946
2,410,122	Mercer	Oct. 29, 1946
2,417,542	Carter	Mar. 18, 1947
2,461,168	McIlvaine	Feb. 8, 1949