Aug. 7, 1951 E. G. HILLS 2,563,243

INDOOR TELEVISION ANTENNA

Filed May 10, 1949

Fig. 1

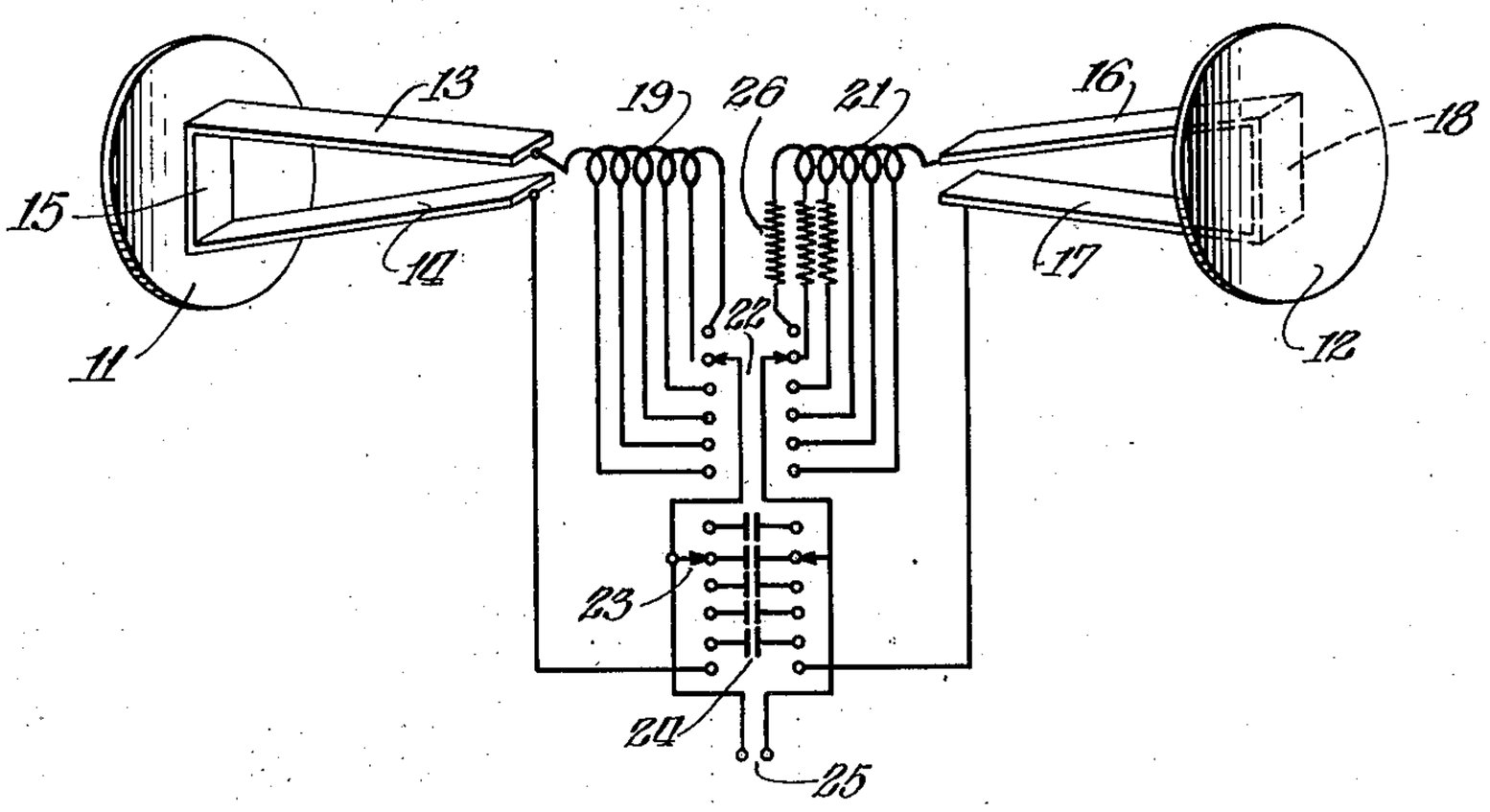

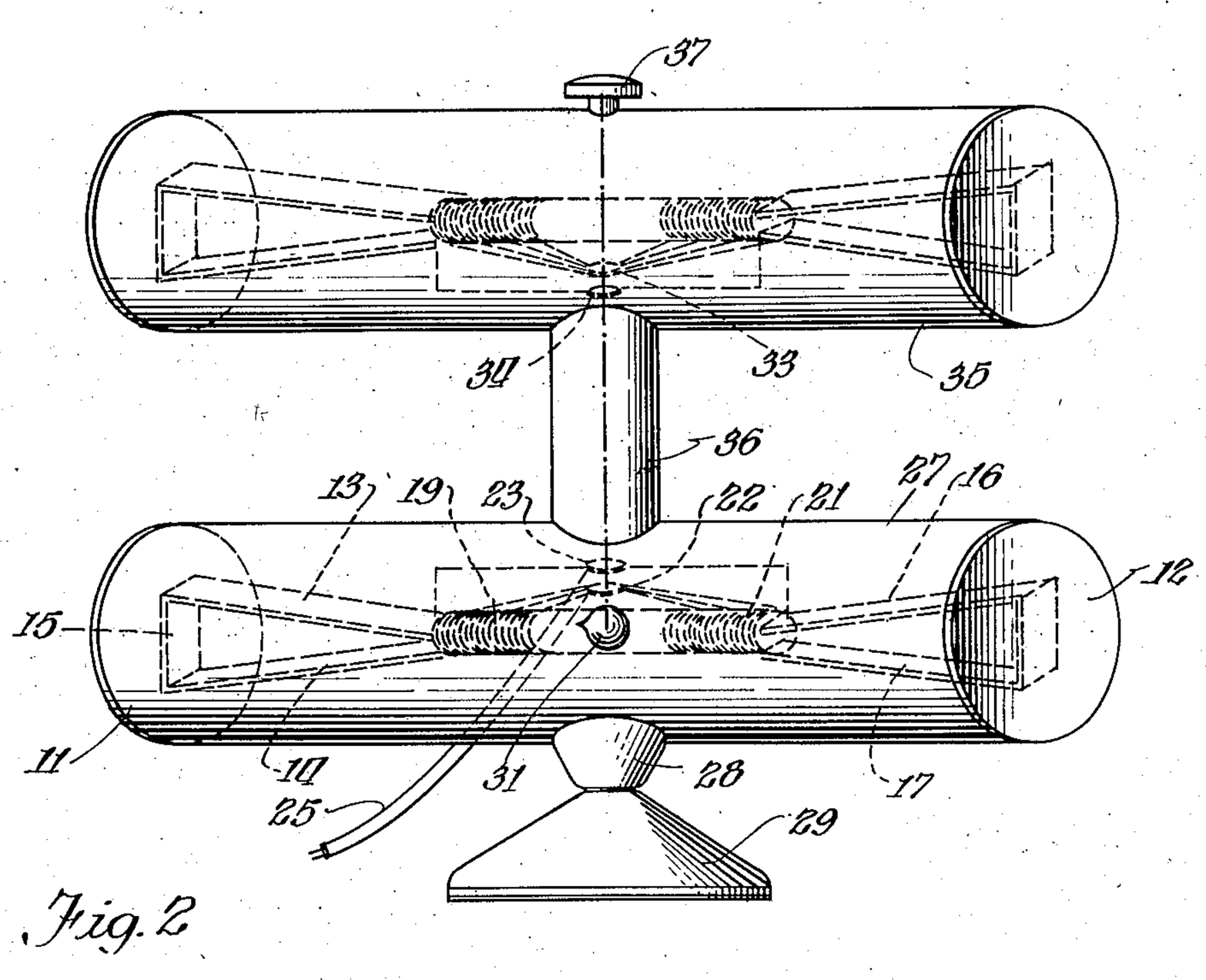

Fig. 2

Inventor:
Elmer Guy Hills.
By: Alois W. Graf
Attorney.

Patented Aug. 7, 1951 2,563,243

UNITED STATES PATENT OFFICE

2,563,243

INDOOR TELEVISION ANTENNA

Elmer G. Hills, Chicago, Ill., assignor of one-half to Joseph N. Marks, Julius Tunkl, I. Rosenthal, and E. Lichtenstein, a partnership doing business as Tricraft Products Co., Chicago, Ill.

Application May 10, 1949, Serial No. 92,311

6 Claims. (Cl. 250—33)

1

The present invention relates to an indoor antenna, and more particularly to an indoor television antenna which is readily oriented and tuned to a desired television channel.

With the increasing popularity of television in congested areas it has been found impractical or difficult to erect on apartment houses and other structures an individual antenna for each television receiver. Accordingly, it has been proposed to employ indoor television antennas. One of the most common indoor television antennas consists of two telescopic rods which must be adjusted to resonance and then oriented for proper direction and polarization. Generally, the adjustment to resonance is obtained by a trial and error method which is complicated by hand capacity. Such antennas, however, generally cannot be adjusted to the lowest frequency television channel since this would make the size of the antenna too great. The great size would be objectionable because of its appearance and also because of the difficulty of orienting a device having an overall length of the order of 108 inches. Such type antenna furthermore produces a mismatch when used with a 300 ohm receiver input.

It, therefore, would be desirable to provide an improved indoor antenna which is readily adjusted to resonance and conveniently oriented for direction and polarization. In accordance with the present invention this may be accomplished by a unique antenna construction which is contained within an ornamental housing having an overall length of the order of 2 feet.

It, therefore, is an object of the present invention to provide an improved indoor antenna which is readily oriented.

A still further object of the present invention is to provide an improved indoor antenna for television which is readily and efficiently adjusted or tuned to the desired television channel.

Still another object of the present invention is to provide a compact, efficient and yet ornamental indoor television antenna.

A still further object of the present invention is to provide an improved indoor television antenna which is readily oriented, quickly tuned to a desired television channel and also matched to the television receiver input.

A still further object of the present invention is to provide an improved television antenna for indoor use which is readily adjusted or tuned to a desired television channel and yet provides adequate band width for each channel to be received.

2

Other and further objects of the present invention subsequently will become apparent by reference to the following description taken in conjunction with the accompanying drawings wherein:

Fig. 1 is an electrical diagram of an indoor television antenna constructed in accordance with the principles of the present invention; and

Fig. 2 is a diagrammatic representation of the physical construction and contour of an antenna having the electrical circuit shown in Fig. 1 and also being provided with a parasite to increase the efficiency of the antenna.

Referring to Fig. 1 of the drawing it will be noted that two parallel discs 11 and 12 are arranged in vertical planes so as to be spaced apart several times the diameter of each disc. In one construction it was found expedient to use discs such as 11 and 12 of about 5 inches diameter spaced apart about 2 feet. The disc 11 is provided with two relatively large conductors 13 and 14 which may be in the form of metal strips having an interconnecting portion 15, securely bonded to or in relatively intimate contact with the disc 11. This construction permits quick assembly since the two conductors 13 and 14 together with the interconnecting portion 15 may be formed of a single properly bent piece of strip metal. The other disc 12 likewise is provided with large strip conductors 16 and 17 having an interconnecting portion 18 in intimate contact with the disc 12.

Connected in the proximity of an equipotential point between the strips 13 and 16 are a plurality of inductors 19 and 21. An equipotential point is one where the potentials measured from the ends of the antenna to the point are equal in magnitude but opposite in phase. Each of the inductors 19 and 21 is tapped so that a switch 22 may select certain portions of the inductors thereby to vary the effective inductance between the conductors 13 and 16. The contacts of the switch 22 are connected to the movable contact of a switch 23 which is arranged to connect a selected one of a plurality of capacitors 24 between the taps of the inductors 19 and 21. The movable contacts of the switches 22 and 23 are connected to the transmission line conductor indicated by the terminal 25. For use with present day television receivers the terminal 25 shown in Fig. 1 constitutes a portion of a 300 ohm transmission line.

The various capacitors 24 are of different size so that together with the effective inductance of the inductors 19 and 21 the proper impedance

relation will result to match the antenna to the 300 ohm output terminal 25.

With the switches 22 and 23 at their topmost position as seen in Fig. 1, the antenna is arranged for the reception of television channel 2. In this position of the switches the effective principal portion of the antenna consists of the two metal strips 13 and 16 leading to the discs 11 and 12. The input impedance of these strips is equivalent to a high capacitive reactance in series with a small resistance. The two coils 19 and 21 have sufficient inductance to tune out the capacitive reactance so as to leave substantially an equivalent impedance consisting of a small resistive and a slightly higher inductive component.

It will be noted from Fig. 1 that the taps of the inductor 21 at the higher inductance values are connected through resistors 26 to the contact points of the switch 22. At the lower frequency the resistors 26 are introduced for a damping effect to increase the band width. While the introduction of resistors would indicate a reduction in the antenna efficiency it has been found that the values of the resistors employed are not as great as was expected based upon calculations made with the aid of known formula. It was thought that the present construction differing from conventional antenna construction and configuration might be due to an inherent higher radiation resistance.

It also will be noted from Fig. 1 that at the highest channel to be received the switch 23 includes a minimum amount of the inductors 19 and 21, and that the switch 22 is connected directly to the conductors 14 and 17. The present antenna at the higher frequency television channels has a characteristic somewhat approaching a double cone antenna with end loading. This characteristic produces substantially 300 ohms input impedance without the need of inductors and a capacitor. It has been found that the present antenna has a standing wave ratio for each channel position in the lower frequency band which ranges from 8 to 1 at the extremities of the channel to 1 to 1 at the center of the channel which is being received.

An antenna structure such as that illustrated by the electrical circuit in Fig. 1 is provided with one control knob which actuates the switches 22 and 23. In a commercial embodiment the switch knob had positions for channels 2, 3, 4, 5, 6 and one position for channels 7 to 13.

This control knob for the switch is located at an equipotential point so as to eliminate the effect of hand capacity. A cylindrical non-conductive housing supports the antenna elements. The housing is journaled for rotation about a vertical axis passing through the equipotential zone. A suitable control knob is provided at the top of the cylindrical housing.

A commercial embodiment such as that just described is similar to the lower portion of the arrangement illustrated in Fig. 2 wherein the antenna elements are contained within a cylindrical housing 27 carried by a support member 28. The support member 28 is arranged for rotation upon a base 29. A suitable control knob 31 is provided for the actuation of the switches 22 and 23. Another control knob shown is located at right angles to the knob 31 whereby the cylindrical housing 27 may be rotated about its vertical axis which passes through the support 28 at the base 29.

The arrangement illustrated in Fig. 2 also shows how an antenna of this type may be employed with a parasite. It is known that a parasite is of benefit at spacing of the order of one-tenth of one wave length. If the parasite has antenna elements corresponding to the antenna shown in the lower portion of Fig. 2 it may be tuned by selector switches 33 and 34 connected to a short circuit instead of a transmission line. The two selector switches 33 and 34 are connected to the selector switches 22 and 23 so that the control knob 31 serves to actuate all switches. The elements of the parasite antenna may be contained within a similar cylindrical housing 35 supported by an interconnecting member 36 engaging the top of the cylindrical housing 27 of the antenna proper. The housing 35 of the parasite may be provided with a control knob 37 whereby the antenna and the parasite both may be oriented.

From Fig. 2 it will be noted that the parasite operates neither as a director nor a reflector but still has the effect of obtaining increased gain and directivity. Such an arrangement provides the most convenient assembly which is readily employed within the home.

In the arrangement thus far described it has been assumed that it is preferable to orient the antenna structure in a horizontal plane. Where an antenna of this type, however, is to be employed within the television receiver cabinet the antenna structure may be tilted so as to be rotatable about a vertical axis passing through the equipotential zone but the axis of rotation need not necessarily be perpendicular to the longitudinal axis of the antenna. It furthermore will be appreciated that where the antenna is employed in this manner it may be just as convenient to match the impedance of the antenna to the input of the receiver or the input of the first stage of amplification and that the tuning of the antenna may be accomplished simultaneously with the tuning of the input circuit of the receiver. It, therefore, will be appreciated that while for the purpose of illustrating and describing the present invention certain preferred embodiments have been mentioned in the description and certain arrangements have been illustrated in the drawings, that the invention is not to be limited thereby since such variations in the arrangement of the components and their relative values are contemplated as may be commensurate with the spirit and scope of the invention as set forth in the accompanying claims.

What I desire to protect by United States Letters Patent is claimed as follows:

1. An indoor antenna for television reception comprising two parallel discs spaced apart a distance equal to several diameters of said discs, a pair of tapped inductors located between said discs adjacent an equipotential point, one terminal of each inductor being connected to an adjacent disc by a relatively large generally horizontal conductor, a transmission line, a plurality of switches interconnecting said tapped inductors with said line, and a plurality of capacitors adapted to be selectively connected between said inductors by said switches.

2. An indoor antenna for television reception comprising two parallel discs spaced apart a distance equal to several diameters of said discs, a pair of tapped inductors located on a line between said discs adjacent an equipotential point, one terminal of each inductor being connected to an adjacent disc by a relatively large generally horizontal conductor, a transmission line, a plurality of switches interconnecting said tapped inductors with said line, a plurality of resistors connected between one of said switches and

certain taps on one of said inductors, and a plurality of capacitors adapted to be selectively connected between said inductors by said switches.

3. An indoor antenna for television comprising two parallel vertical conductive discs, a pair of inductors located on a line between said discs adjacent an equipotential point, one terminal of each inductor being connected to an adjacent disc by means of a relatively large conductor, means for varying the effective amount of inductance of each of said inductors in accordance with a television channel to be received, means for broad banding said antenna at the lower television channels, a transmission line connected to said inductors, and switching means for connecting a capacitor between said inductors to provide an impedance value for said antenna substantially equal to the impedance value of said transmission line.

4. The combination comprising an indoor antenna for television reception having spaced apart parallel vertical conductive discs, a pair of inductors located horizontally between said discs adjacent an equipotential point, one terminal of each inductor being connected to an adjacent disc, means for varying the effective amount of inductance associated with each disc for a selected television channel to compensate for the capacitive reactance of said antenna, a transmission line connected to said inductors and means for connecting a capacitor between said inductors to provide an impedance value for said antenna substantially equal to the impedance of said transmission line, and a parasitic antenna arranged parallel to said first antenna and comprising spaced apart parallel vertical conductive discs, a pair of inductors located horizontally between said discs adjacent an equipotential point, one terminal of each inductor being connected to an adjacent disc, means for varying the effective amount of inductance associated with each disc for a selected television channel, means for connecting a capacitor between said inductors to provide an impedance value corresponding to that of said first antenna, and means for simultaneously controlling said means for varying the effective amount of inductance of said two pairs of inductors.

5. An indoor antenna for television comprising a housing supporting two parallel vertical conductive discs, a pair of inductors located between said discs adjacent an equipotential point, one terminal of each inductor being connected to an adjacent disc by means of a relatively large conductor, means for varying the effective amount of inductance of each of said inductors in accordance with television channels to be received, means for broad-banding said antenna at the lower television channels, a transmission line connected to said inductors, and means for connecting a capacitor between said inductors to provide an impedance value for said antenna substantially equal to the impedance value of said transmission line, and a parasitic antenna having a housing arranged parallel to said first

housing and supporting two parallel vertical conductive discs, a pair of inductors located between said discs adjacent an equipotential point, one terminal of each inductor being connected to an adjacent disc by means of a relatively large conductor, means for varying the effective amount of inductance of each of said inductors in accordance with television channels to be received, means for connecting a capacitor between said inductors to provide a desired impedance value, and means for simultaneously controlling said means for varying the effective amount of inductance of each of said inductors.

6. An indoor antenna system for television reception comprising a horizontal housing supporting two parallel discs spaced apart a distance equal to several diameters of said discs, a pair of tapped inductors located between said discs adjacent an equipotential point, one terminal of each inductor being connected to an adjacent disc by a relatively large conductor, a transmission line, a plurality of rotary switches interconnecting said tapped inductors with said line, a plurality of resistors connected between the contacts of one of said switches and certain taps on one of said inductors, a plurality of capacitors adapted to be selectively connected between said inductors by said switches, and a second housing located parallel to and above said first housing and supporting two parallel discs spaced apart a distance equal to several diameters of said discs, a pair of tapped inductors located between said discs adjacent an equipotential point, one terminal of each inductor being connected to an adjacent disc by a relatively large conductor, a plurality of rotary switches interconnecting said tapped inductors with a plurality of capacitors, a plurality of resistors connected between the contacts of one of said switches and certain taps on one of said inductors, and means for simultaneously actuating all of said switches of both of said supporting structures.

ELMER G. HILLS.

REFERENCES CITED

The following references are of record in the file of this patent:

UNITED STATES PATENTS

Number	Name	Date
2,177,416	Alford	Oct. 24, 1939
2,272,608	Hoffman	Feb. 10, 1942
2,293,112	Carlson et al.	Aug. 18, 1942
2,311,364	Buschbeck et al.	Feb. 16, 1943
2,313,046	Bruce	Mar. 9, 1943
2,324,462	Leeds et al.	July 13, 1943
2,356,201	Beers	Aug. 22, 1944
2,387,116	Bruce	Oct. 16, 1945
2,419,577	Libby	Apr. 29, 1947
2,492,989	Halstead	Jan. 3, 1950

OTHER REFERENCES

QST. for April 1933, page 21.