June 19, 1951 R. D. HOLMES 2,557,504

CUTOUT CLEARER FOR PERFORATED CONTAINERS

Filed April 17, 1950 3 Sheets-Sheet 1

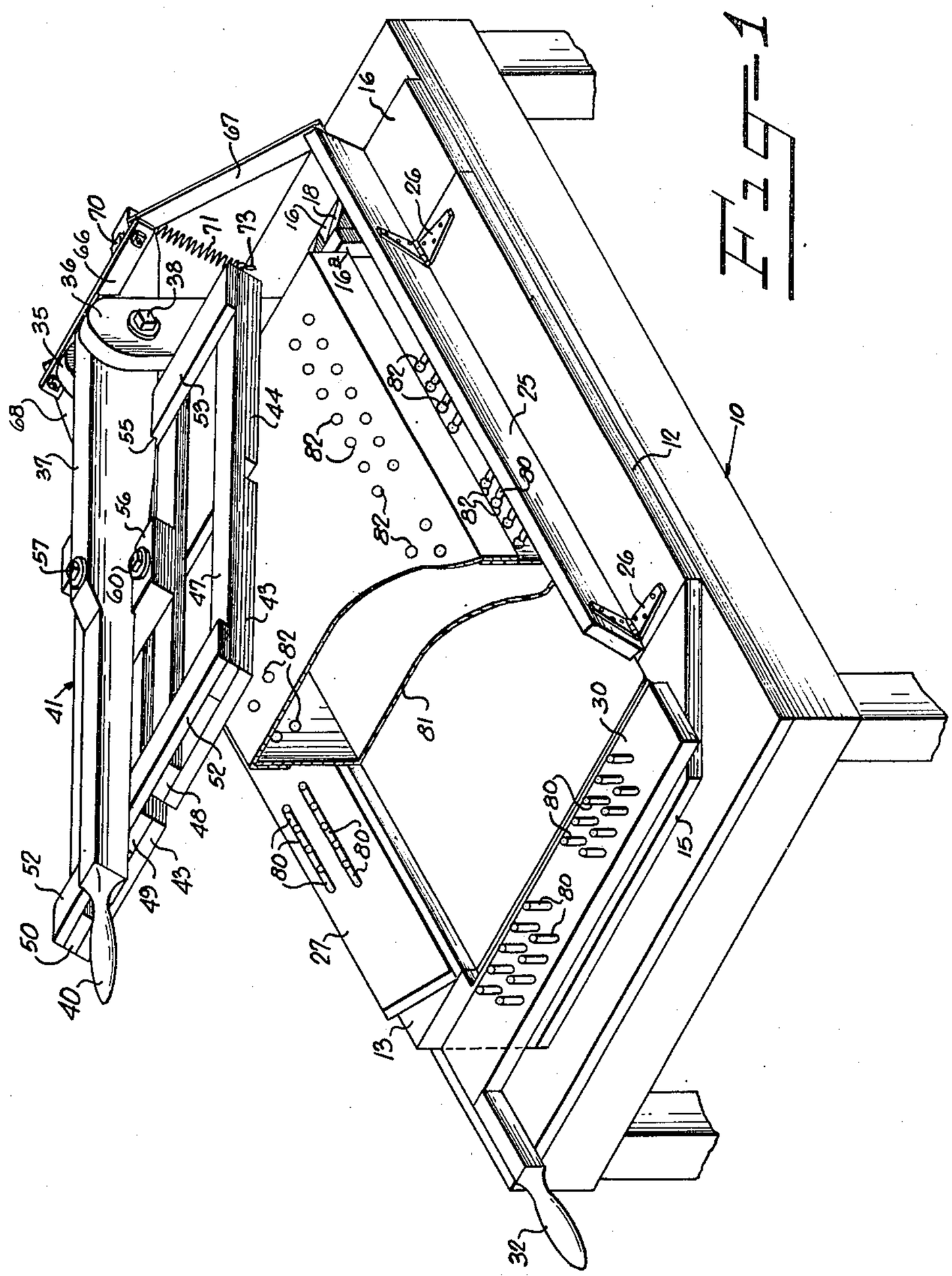

Fig. 1

RAYMOND D. HOLMES,
INVENTOR.

BY Eaton & Bell

ATTORNEYS.

June 19, 1951 R. D. HOLMES 2,557,504

CUTOUT CLEARER FOR PERFORATED CONTAINERS

Filed April 17, 1950 3 Sheets-Sheet 2

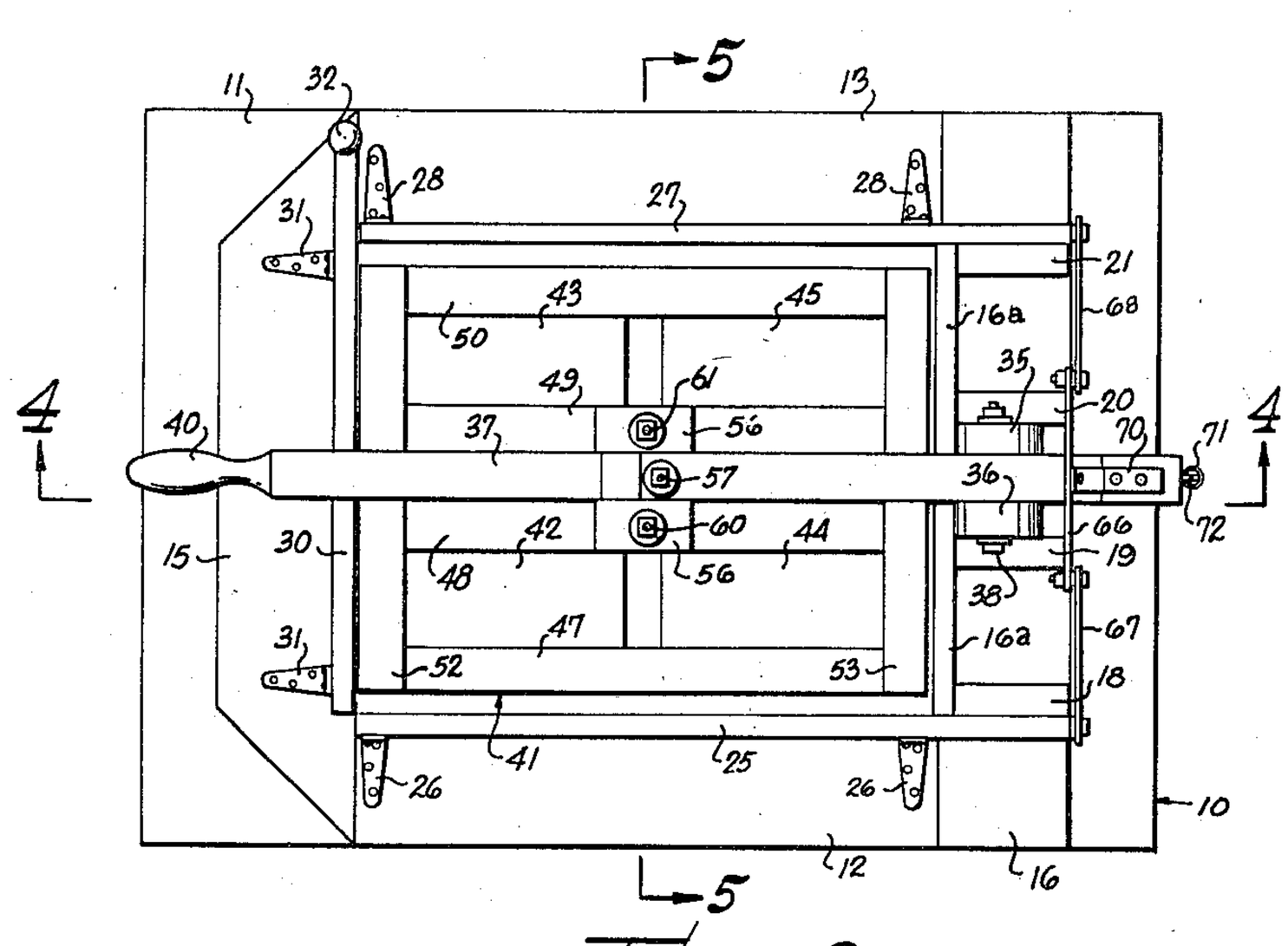

Fig—2

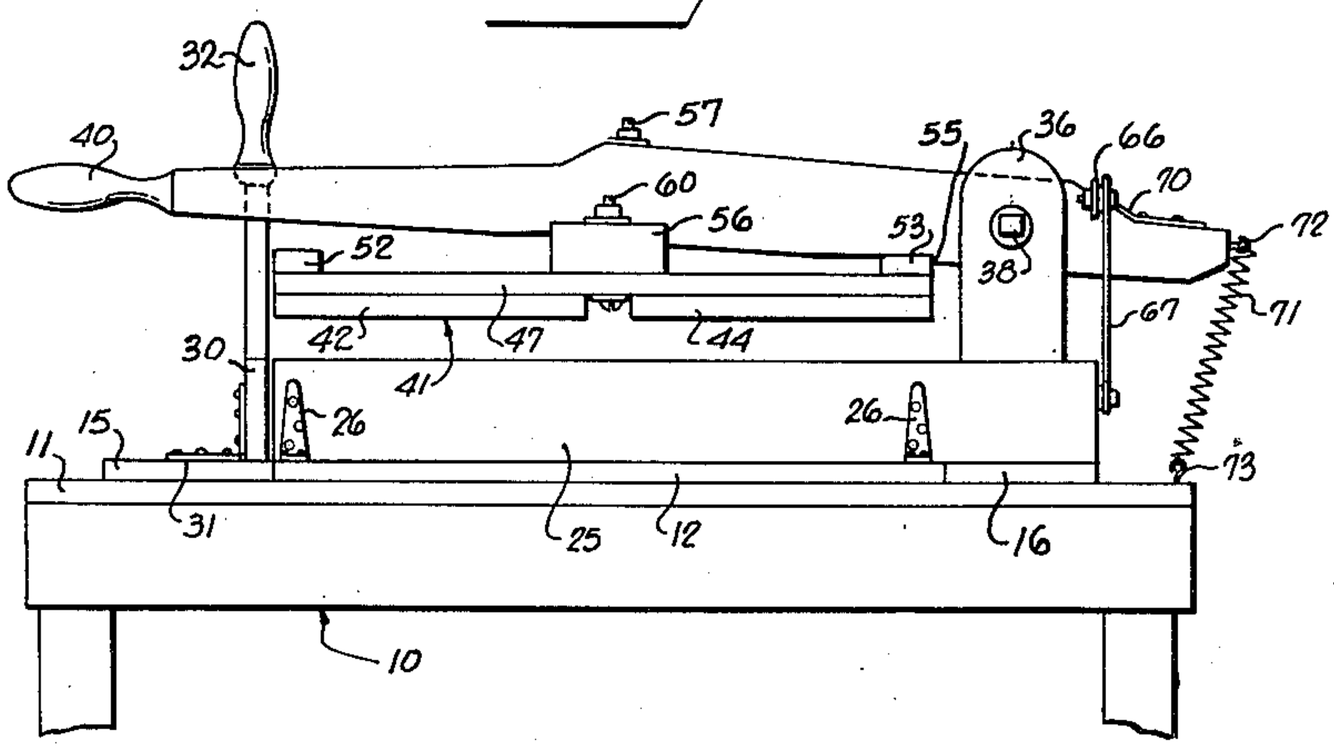

Fig—3

RAYMOND D. HOLMES,
INVENTOR.

BY Eaton & Bell

ATTORNEYS

June 19, 1951 R. D. HOLMES 2,557,504

CUTCUT CLEARER FOR PERFORATED CONTAINERS

Filed April 17, 1950 3 Sheets-Sheet 3

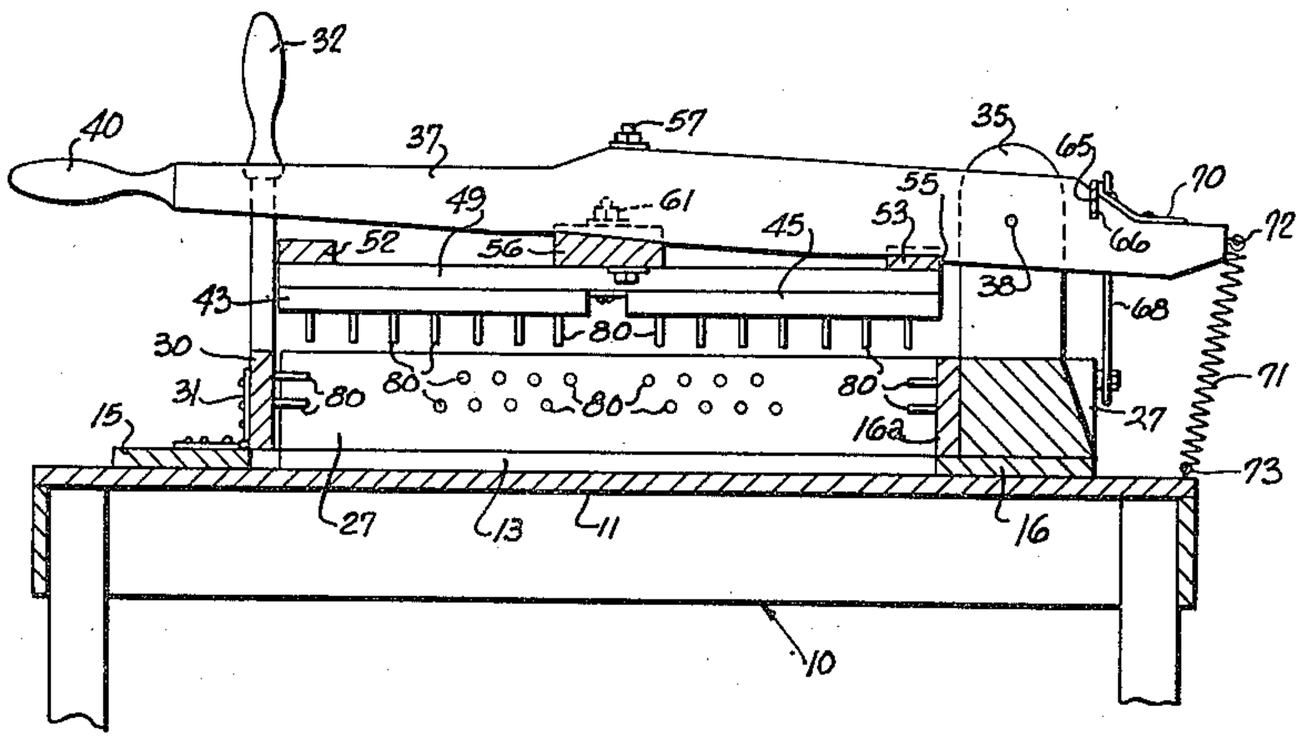

Fig- 4

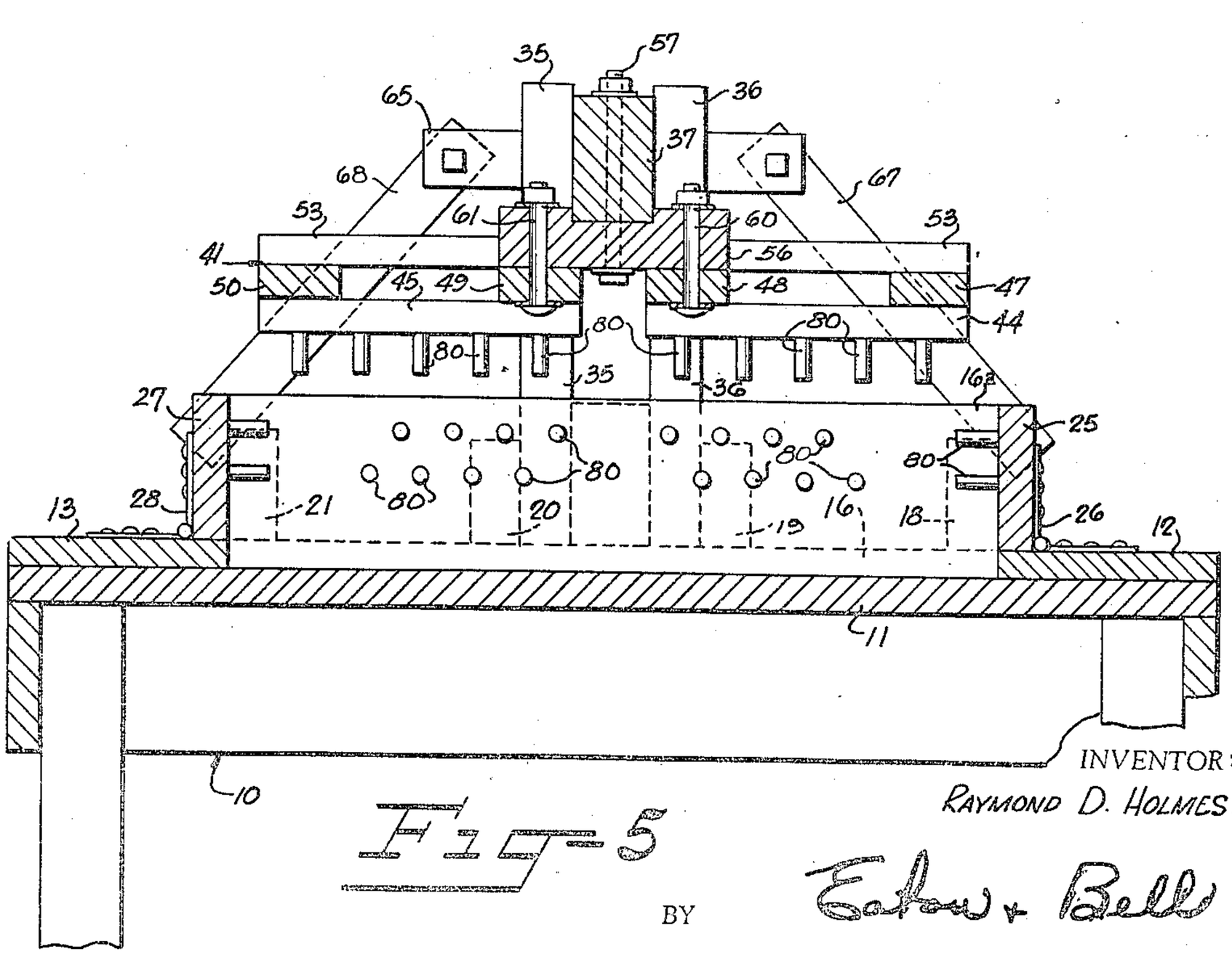

Fig-5

INVENTOR:
RAYMOND D. HOLMES.

BY Eaton & Bell

ATTORNEYS.

Patented June 19, 1951 2,557,504

UNITED STATES PATENT OFFICE

2,557,504

CUTOUT CLEARER FOR PERFORATED CONTAINERS

Raymond D. Holmes, Clinton, N. C., assignor to Fleming Specialty Company, Charlotte, N. C., a partnership

Application April 17, 1950, Serial No. 156,258

4 Claims. (Cl. 164—91)

1

This invention relates to an apparatus for punching previously cut portions from cartons such as chick cartons and the like.

It is well known that various cartons are manufactured with a plurality of perforations therein for various purposes such as to permit air to flow into the interior of the cartons when the carton contains animals such as baby chicks and the like. In manufacturing cartons of this type, the perforations are cut in the stock forming the carton, and the cut-out portion usually adheres to the stock due to the fact that the cutting machine does not punch it out, or in some instances a small portion is not cut away. Heretofore, it has been necessary to punch these cut-out portions from the stock or from the assembled carton by hand and this has been a tedious and expensive operation.

It is therefore an object of this invention to provide an apparatus adapted to receive a container such as a cardboard carton which has previously been cut to form a plurality of perforations, the cut-away portions still adhering to the carton, and said apparatus being so constructed as to engage the carton on all sides thereof and being provided with projections adapted to coincide with the cut-out portions of the carton and having means causing said projections to move into striking engagement with the cut-out portions to remove the same from the carton.

It is another object of this invention to provide an apparatus of the type described having a planar bottom member and being provided with hinged portions on each side and each end thereof adapted to be moved into a vertical plane to engage the vertical surfaces of a cardboard container resting on the planar surface and said apparatus also being provided with a support member extending upwardly from the planar support member and having a lever pivotally mounted thereon to which a plate is secured, said plate and said hinged side and end members all being provided with a plurality of projections adapted to coincide with the cut-out portions of the container, and said lever having the plate thereon also being provided with a spring normally holding the plate out of engagement with the top of the carton and handle means adapted to be seized by an operator for moving the lever downwardly so that the plate will engage the top of the carton member to cause the projections thereon to punch out any cut-away pieces of cardboard still adhering to the top of the carton, and to also move the side members to vertical position.

2

Some of the objects of the invention having been stated, other objects will appear as the description proceeds when taken in connection with the accompanying drawings, in which—

Figure 1 is an isometric view of the apparatus showing the same in open position and showing a carton associated therewith, portions of the carton being broken away for purposes of clarity;

Figure 2 is a top plan view of the apparatus in closed position;

Figure 3 is a side elevation of the apparatus in closed position;

Figure 4 is a vertical sectional view taken along the line 4—4 in Figure 2;

Figure 5 is a vertical sectional view taken substantially along the line 5—5 in Figure 2.

Referring more specifically to the drawings, the numeral 10 indicates a suitable table on which the apparatus may be disposed if desired. The apparatus comprises a base in the form of a planar member 11 which is preferably rectangular in plan and which may be the top of a suitable table 10, if desired, and which has secured thereto side guide members 12 and 13, and end guide members 15 and 16. The guide members 12, 13, 15 and 16 are disposed in a horizontal plane and the end guide member has a vertically disposed end punching member 16*a* secured thereto and held in position by brace members 18, 19, 20 and 21 secured to the end guide member 16 and to the end punching member 16*a*.

A side punching member 25 is hingedly secured as at 26 to the upper surface of the side guide member 12 and a second side punching member 27 is hingedly secured as at 28 to the upper surface of the side guide member 13. An end punching member 30 is hingedly secured as at 31 to the upper surface of the end guide member 15 and this member 30 is provided with a handle 32 for raising the same to a vertical position.

Support members comprising a pair of uprising posts 35 and 36 are suitably secured at their lower ends to the upper surface of the end guide member 16 at a point intermediate the ends thereof. A lever 37 is pivotally secured as at 38 between the uprising posts 35 and 36 and the lever 37 extends longitudinally of the apparatus for a distance substantially equal to the length of the planar member 11 and is provided with a handle 40 at the end thereof remote from the pivot point 38.

An upper punching member or plate 41 is secured to the lower surface of the lever 37. The

plate 41 may be of any suitable construction and is shown as comprising four separate members 42 to 45, inclusive, all being disposed in the same plane and being secured together by means of longitudinal ribs 47 to 50, inclusive. A pair of transverse ribs 52 and 53 extend across the top of the ribs 47 to 50, inclusive, and secure the same together to thus form the plate 41.

The lower surface of the lever 37 is cut away as at 55 and the upper surface of the transverse rib 53 fits into this cut away portion. A spacer block 56 is secured to the lower surface of the lever 37, intermediate the transverse ribs 52 and 53, as by a bolt 57, and the plate 41 is secured to the lower surface of the spacer block 56 as by bolts 60 and 61.

It will be observed in Figures 1, 3 and 4, that this will cause the plate 41 to be disposed at a slight angle relative to the lever 37 and the upper surface of the transverse rib 52 will not be in engagement with the lower surface of the lever 37. The purpose of this is to cause the plate 41 to be in an almost horizontal position at the time it engages the upper surface of a carton to be described.

The end of the lever 37 remote from the handle 40 extends beyond the support members 35 and 36 and is cut away as at 65 and a transverse member 66, of any suitable material such as strap iron, is secured thereto. The transverse member 66 extends on each side of the lever 37 and has pivotally secured to each end thereof depending links 67 and 68, respectively, the lower ends of which are pivotally secured to the ends of the side punching members 25 and 27, respectively. A brace member 70 is also secured to the upper surface of the lever 37 and to the rear surface of the transverse strap member 66 to hold the same securely in position. A suitable tension spring 71 is secured at its upper end to a spring anchor 72 disposed on the end of the lever 37 remote from the handle 40 and the other end of the spring 71 is secured to a suitable spring anchor 73 disposed on the upper surface of the planar member 11.

A plurality of projections 80 are suitably secured to or embedded in the proximate surfaces of the side punching members 25 and 27 and also to the end punching members 30 and 16*a*, and a plurality of these projections 80 are also suitably secured to or embedded in the lower surface of the members 42 to 45, inclusive, comprising the upper punching plate 41. These projections 80 may be spaced in any suitable arrangement, and are provided to engage cut-away portions of a cardboard carton broadly indicated at 81 in which a plurality of portions 82 have previously been cut.

The carton 81 may be of any suitable construction and the drawings show a carton of the type which is frequently used for containing baby chicks and the like and which must have a plurality of perforations in the side and top walls to permit the chicks contained therein to obtain air. These perforations are usually cut in the cardboard stock by a stamping or cutting machine which frequently fails to cut the disks forming the perforations completely free from the carton. The disks forming the perforations may be of any suitable shape and may be spaced as desired. When the disks 82 are cut completely free from the carton they will usually adhere to the carton requiring an operator to punch the same free from the carton to form the perforations.

Now, it will be observed that the carton 81 may be placed with its lower surface resting on the upper surface of the planar member 11 and

one end of the carton may be moved adjacent the guide member 16 to cause the projections 80 on the end punching member 16*a* to engage the disks 82 in the end wall of the carton and punch the same free from the carton. Then the handle 40 may be grasped by an operator and pulled downwardly causing the plate member 40 to engage the upper surface of the carton 81 and as the end of the lever 37 remote from the handle 40 moves upwardly around the pivot point 38, the strap member 66 and the links 67 and 68 will cause the side members 25 and 27 to be moved to a vertical position to cause the projections 80 thereon to engage the disks 82 in the side walls of the container. The handle 32 may then be raised causing the end punching member 30 to be moved to a vertical position so that the projections 80 thereon will punch the disks 82 out of the other end of the carton 81.

The handle 32 may then be lowered to move the end punching member 30 to a horizontal position and the handle 40 may be released which will cause the spring 71 to urge the end of the lever 37 remote from the handle 40 downwardly to raise the plate 41 with its projections 80 from the top of the carton 81. The arms 67 and 68 will be urged in opposite directions to move the side punching members 25 and 27 to a horizontal position and then the carton may be removed from the apparatus.

In the drawings and specification there has been set forth a preferred embodiment of the invention, and although specific terms are employed, they are used in a generic and descriptive sense only and not for purposes of limitation, the scope of the invention being defined in the claims.

I claim:

1. Apparatus for punching previously cut portions from a carton comprising a planar member adapted to support said carton and having end guide members and side guide members secured thereto for holding the carton in proper position, side punching members hingedly secured to said side guide members, a first end punching member rigidly secured to one of said end guide members, a second end punching member hingedly secured to the other of said end guide members, a support member secured at its lower end to said end guide member having the first end punching member rigidly secured thereto, a lever pivotally mounted on the upper end of said support member, said lever being provided with a plate secured to the lower surface thereof, said plate and said end and side punching members all having a plurality of projections on the proximate surfaces thereof, the number of said projections corresponding to the number of portions of a carton which have been previously cut from the carton but which still adhere to said carton, means for moving said side and end punching members and said top plate adjacent the respective walls of the carton, said projections being so disposed as to coincide with the respective previously cut portions of the carton to punch the same free from the carton when the said end and side punching members and the top plate are moved adjacent the respective walls of the carton.

2. A device for punching disks from a carton, said disks having been previously cut from the carton but still adhering thereto, said device comprising a planar support member for the carton, a rigid punching member adapted

to engage the one end wall of the carton, a plurality of punching members hingedly secured to the planar support member and adapted to be moved into engagement with the other walls of the carton, an uprising member having its lower end secured to the planar support and having a lever pivotally mounted therein, a top punching member secured to the lower surface of said lever, and all of said punching members being provided with a plurality of projections, said projections being so spaced as to coincide with the disks adhering to said carton when the punching members are moved adjacent the carton, and means for moving all of said punching members adjacent the respective walls of the carton so that the projections thereon will engage and punch the disks free from said carton.

3. Means for punching portions from a container such as a cardboard carton in which said portions have been previously cut in said carton but which still adhere to said carton, comprising a base member, side guide members and end guide members secured to said base for positioning said carton, a first end punching member fixedly secured to one of said end guide members, a second end punching member hingedly secured to the other end guide member, first and second side punching members hingedly secured to said side guide members, an uprising post secured at its lower end to the upper surface of said first end guide member, a lever extending longitudinally of the base member and being pivotally mounted intermediate its ends on said uprising member, a top punching member secured between said lever and said top punching member to cause said top punching member to be positioned at an angle relative to said lever, the other end of said lever having a handle at one end thereof, a spring connected to the end of the lever remote from said handle and having its other end connected to said base member, a transverse member secured to said lever adjacent its pivot point, said transverse member extending on either side of said lever and having a depending arm pivotally secured to each end thereof, each of said depending arms being pivotally secured at their other ends to one end of said first and second side punching members, said end, side and top punching members each being provided with a plurality of projections on the approximate surfaces thereof, said projections being so positioned as to coincide with the portions of said carton which have been previously cut, whereby the handle may be grasped by an operator to move the punching members adjacent the respective walls of the carton to cause the projections thereon to punch the cut out portions free from the carton, and the spring will cause the punching members to move away from the carton when the handle is released.

4. Means for removing previously cut portions from the sides and lid of a substantially rectangular carton comprising a planar member adapted to support said carton, first movable members adapted to engage the sides of said carton, a rigid member adapted to engage one end of said carton, a second movable member adapted to engage the other end of said carton and a third movable member adapted to engage the lid of said carton, all of said first, second and third movable members and said rigid member having a plurality of projections thereon so arranged as to coincide with the previously cut portions of said carton and means for moving all of said movable members into engagement with the carton to displace the previously cut portions from the sides and lid of the carton.

RAYMOND D. HOLMES.

REFERENCES CITED

The following references are of record in the file of this patent:

UNITED STATES PATENTS

Number	Name	Date
1,164,027	Stevenson	Dec. 14, 1915
1,452,224	Smith	Apr. 17, 1923

FOREIGN PATENTS

Number	Country	Date
1,857 of 1876	Great Britain	Sept. 23, 1876