Aug. 8, 1950 R. L. CHENAULT 2,517,841

UNLOADING VALVE FOR OIL WELL PUMPS AND THE LIKE

Filed Dec. 6, 1946 3 Sheets-Sheet 1

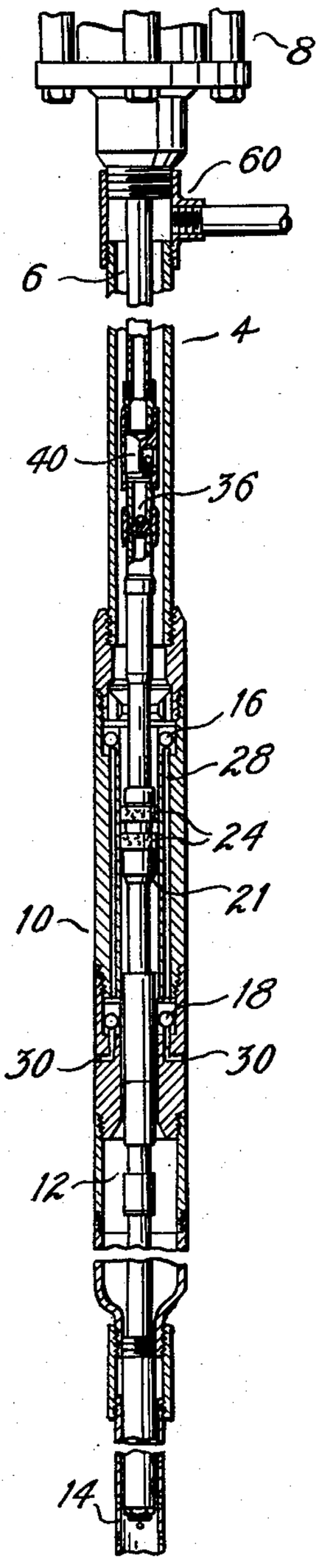

Fig. 1.

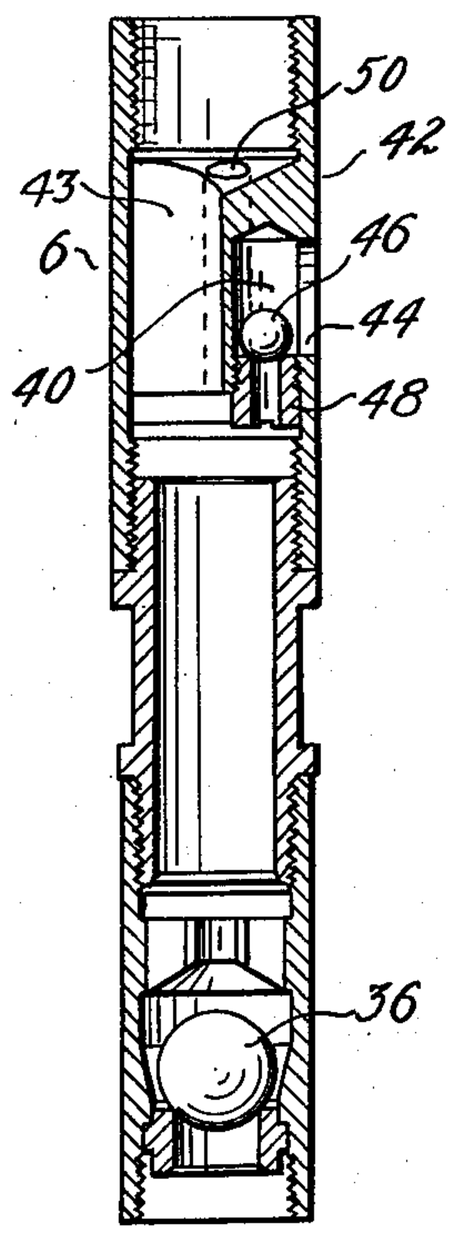

Fig. 2.

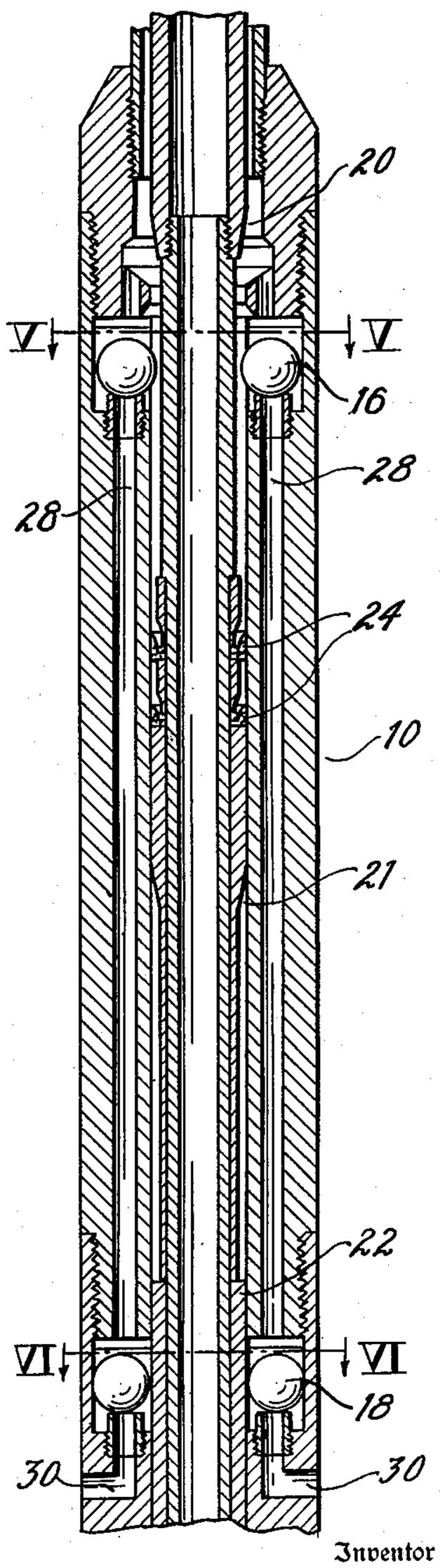

Fig. 3.

Inventor
Roy L. Chenault
By Donald G. Dalton
His Attorney

Aug. 8, 1950 R. L. CHENAULT 2,517,841

UNLOADING VALVE FOR OIL WELL PUMPS AND THE LIKE

Filed Dec. 6, 1946 3 Sheets-Sheet 2

Fig. 4.

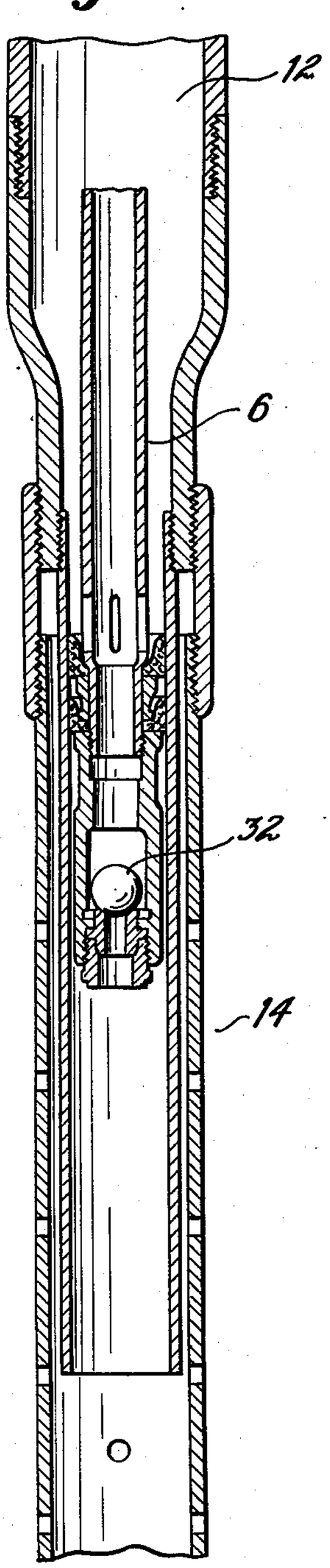

Fig. 5.

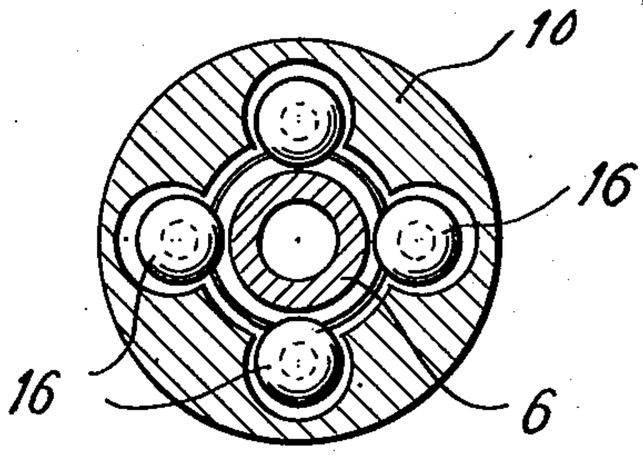

Fig. 6.

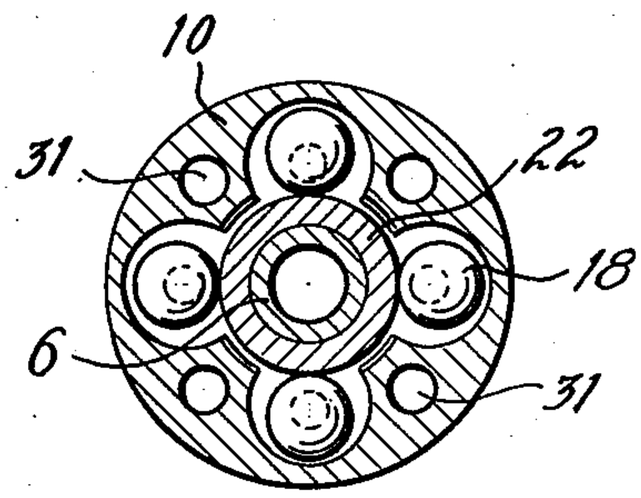

Inventor
Roy L. Chenault
By Donald G. Dalton
His Attorney

Aug. 8, 1950 R. L. CHENAULT 2,517,841

UNLOADING VALVE FOR OIL WELL PUMPS AND THE LIKE

Filed Dec. 6, 1946 3 Sheets-Sheet 3

Fig. 7.

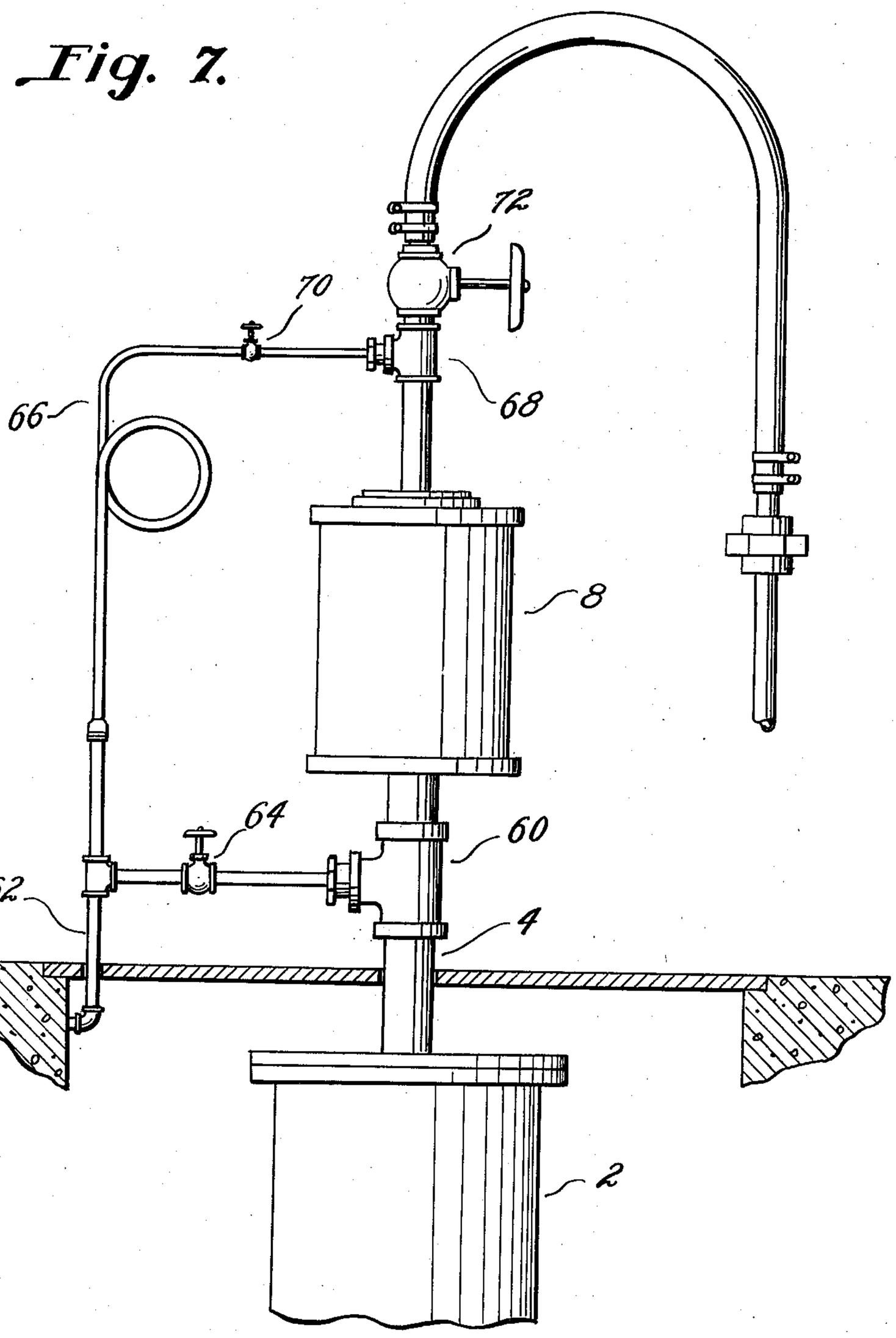

By

Inventor
Roy L. Chenault
Donald G. Dalton

His Attorney

Patented Aug. 8, 1950 2,517,841

UNITED STATES PATENT OFFICE

2,517,841

UNLOADING VALVE FOR OIL WELL PUMPS AND THE LIKE

Roy L. Chenault, Cranberry Township, Venango County, Pa., assignor to Oil Well Supply Company, a corporation of New Jersey

Application December 6, 1946, Serial No. 714,390

5 Claims. (Cl. 103—231)

1

This invention relates to gas lift oil well pumps and more particularly to an unloading valve therefor.

In oil well pumps embodying two strings of tubing which utilize gas pressure to raise the fluid, there is a tendency for a column of fluid to build up in the inner and outer strings of tubing employed in such devices during long periods of shut down. When this occurs, excessively high gas pressure is required to dislodge the columns of fluid and force them up through the inner string of tubing before the so-called "gas lift slugger" can be operated in the usual manner with normal gas pressure. Kick-off valves of the type which open by a telescoping action when the tubing rests on bottom have previously been proposed and tried for this purpose but they have not proven satisfactory when used near the bottom of the tubing because they sometimes open on the down stroke of the tubing as a result of friction of the cups in their respective barrels.

Accordingly it is an object of the present invention to provide an unloading valve for gas lift oil well pumps which is subject to positive control.

It is a further object of this invention to provide an unloading valve for gas lift oil well pumps which is simple in design and rugged and durable in operation.

The foregoing and further objects will be apparent from the following specification when read in conjunction with the attached drawings, wherein:

Figure 1 is a view partially in elevation and partially in section of a gas lift oil well pump embodying the valve of the present invention;

Figure 2 is a view in section of the new unit of my present invention arranged above the upper check valve;

Figure 3 is a sectional view of the valve chest;

Figure 4 is a view in vertical section of lower end of the pump and displacement chamber;

Figure 5 is a horizontal section on the line V—V of Figure 3;

Figure 6 is a horizontal section on the line VI—VI of Figure 3; and

Figure 7 is a schematic arrangement of gas supply lines and valves at upper end of the well.

In Figure 1, I have shown a gas lift oil well pump of the type disclosed and claimed in my Patent No. 2,356,504, granted August 22, 1944. This arrangement comprises essentially an outer string of casing 2 in which is concentrically disposed a stationary string of tubing 4 and an inner reciprocatory and education string of pipe 6.

2

The inner string 6 is adapted to be reciprocated by a piston and cylinder, a portion of which is indicated generally at 8. The stationary string of tubing 4 carries at its lower end a valve chest 10, from which is suspended a displacement chamber 12. Below the displacement chamber, there is a conventional screen 14. Disposed in the valve chest are upper and lower ball valves 16 and 18 adapted to be unseated alternately in normal pumping operations by upper and lower cams 20 and 22 carried by the reciprocating string 6. Also carried by the string 6 and intermediate the cams 20 and 22 are sealing members 24 so that the only communication between the upper and lower ends of the valve chest is through passageways 28 controlled by ball valves 16. Communication from the casing 2 to the annular space between tubing 4 and pipe 6 is controlled by ball valves 18 opening and closing passages 30. Passageways 31 connect the passageways 28 with the displacement chamber 12 at all times. The inner string 6 extends through the displacement chamber 12 into the screen 14 and has at its lower end a check valve 32.

A check valve 36 is disposed in the inner pipe above the valve chest. Such a valve has been found to be highly desirable in most cases, as it permits utilization of the energy of expansion of the gas in the pipe after the supply of gas is shut off and the displacement chamber is vented to the casing by the exhaust valves. However, when such a check valve is inserted in the inner pipe 6, unloading of a column of fluid therefrom necessitates excessive gas pressures.

In order to overcome this difficulty, I utilize an additional intermediate cam 21 between the cams 20 and 22 and have provided the special unloading valve 40 of this invention. The intermediate cam 21 and the upper cam 20 are so relatively disposed as to unseat the upper and lower valves 16 and 18 when the inner pipe 6 is lowered to its lowermost position. The unloading valve 40 is inserted in the inner pipe 6 above the check valve 36 to permit unloading of a head of fluid therefrom. The valve 40 consists of a valve body or casing 42 having a vertical passageway 43 therethrough and a passageway 44 connecting the inside of the pipe with the concentric space between the inner pipe 6 and the tubing 4. The passageway 44 is normally closed by a ball valve 46 actuating in conjunction with a valve seat 48. There is also provided in the valve 40 a bore 50 providing a further unobstructed passageway for fluid through the inside of the inner pipe 6.

At the upper end of the tubing 4 below the

reciprocating piston and cylinder 8, there is provided a T-coupling 60 which is connected to a gas source 62 through a valve 64. The gas source 62 is also connected to the inner string of pipe 6 by suitable flexible piping 66 and T-coupling 68 through a control valve 70. The regular flow string valve 72 is disposed above the T-coupling 68. With this arrangement, gas under pressure may be admitted to the inner pipe 6 and the annulus between the inner pipe 6 and the tubing 4 simultaneously by opening valves 64 and 70 and closing valve 72.

If due to a shut down columns of fluid have built up in the inner pipe and the annular space between the pipe, such fluid may be displaced in the following manner. The inner or reciprocatory string of pipe is lowered to unloading position to unseat valves 16 and 18 by bringing cams 20 and 21 into contact therewith. This permits the fluid contained between the inner string of pipe and the tubing to be exhausted to the casing through passages 28 and 30. Then by admitting gas to the inner string (it being understood that gas pressure is normally applied constantly to the annular space between the inner and outer strings), an unbalanced condition is created whereby the pressure in the inner string 6 is greater than in the annular space between string 6 and tubing 4 which automatically lifts ball valve 46 to permit the column of fluid to flow through passage 44 to the annular space between the inner and outer strings of the tubing. Due to valves 16 and 18 being unseated by upper cam 20 and intermediate cam 21, the fluid displaced from the inner string flows downwardly through passages 28 and 30 and is discharged into the casing 2 and from thence to the oil pool. After the inner string and the annular space is evacuated, the inner tube is lifted to its normal upper position permitting upper valves 16 to seat and causing the lower valves 18 to be opened by cam 22. This exhausts the gas pressure to the casing and permits the displacement chamber to fill. After it has filled, the inner tube is lowered to its normal lower working position whereby the upper valves 16 are opened and the lower valves 18 are closed. This admits the gas pressure to the displacement chamber through passages 28 and 31 to force the fluid upwardly from the displacement chamber into the inner tube and thence to the surface.

While I have shown and described one specific embodiment of my invention, it will be understood that this embodiment is merely for the purpose of illustration and description and that various other forms may be devised within the scope of my invention, as defined in the appended claims.

I claim:

1. Apparatus for pneumatically pumping liquids from wells including an inlet for gaseous fluid under pressure, a displacement chamber adapted to be positioned in the liquid in a well, ball check valve means for venting the chamber of entrapped gas to the well, a second ball check valve means for controlling the delivery of gaseous fluid from said inlet to said chamber, a vertically reciprocable eduction tube in communication with the lower part of said chamber and extending therefrom to the top of the well, cam means carried by said eduction tube for operating said valves in accordance with the reciprocation of the tube, whereby when the tube is lowered gaseous fluid is admitted to the displacement chamber and when the tube is raised the displacement chamber is vented to the well, a check valve in said tube above said cam means, and a valve body in said eduction tube above said check valve having a passageway opening to the exterior of said tube and a check valve in said passageway, said valve being operable by the application of higher pressure to the interior than the exterior of said tube.

2. Apparatus for pneumatically pumping liquids from wells including an inlet for gaseous fluid under pressure, a displacement chamber adapted to be positioned in the liquid in a well, ball check valve means for venting the chamber of entrapped gas to the well, a second ball check valve means for controlling the delivery of gaseous fluid from said inlet to said chamber, a vertically reciprocable eduction tube in communication with the lower part of said chamber and extending therefrom to the top of the well, cam means carried by said eduction tube for opening said ball check valves in accordance with the reciprocation of the tube, a check valve in said tube above said cam means, a valve body in said eduction tube above said check valve having a passageway opening to the exterior of said tube and a check valve in said passageway, said last-mentioned valve being operable by the application of higher pressure to the interior than the exterior of said tube and cam means for opening both of said ball check valves when said eduction tube is lowered to its lowermost position.

3. Apparatus for pneumatically lifting liquids from wells including inner and outer strings of tubing adapted to be positioned in a well, a displacement chamber carried by said outer string of tubing adjacent the lower end thereof, said inner string of tubing forming an eduction tube for delivering liquids from the chamber to the top of the well, a valve chest carried by said outer string of tubing, an exhaust passage leading from the chest to the outside of the outer string of tubing, a gas inlet passage for admitting gas under pressure to the chest, valve ports and valve port sealing means carried in said chest for controlling fluid flow through said exhaust and inlet passages, an open fluid passageway leading from the displacement chamber to the chest, means separate from said valve port sealing means and carried by the eduction tube for opening said valve port sealing means, a check valve in said eduction tube above said valve chest, a valve body in said eduction tube having a passageway opening to the annular space between the said two strings of tubing and a check valve in said passageway, said valve being operable by the application of higher pressure to the interior than the exterior of said tube and means for opening both of said valve port sealing means when said eduction tube is lowered to its lowermost position.

4. Apparatus for pneumatically lifting liquids from wells including inner and outer strings of tubing adapted to be positioned in a well, a displacement chamber carried by said outer string of tubing adjacent the lower end thereof, said inner string of tubing forming an eduction tube for delivering liquids from the chamber to the top of the well, a valve chest carried by said outer string of tubing, an exhaust passage leading from the chest to the outside of the outer string of tubing, a gas inlet passage for admitting gas under pressure to the chest, valve ports and valve port sealing means carried in said chest for controlling fluid flow through said exhaust and inlet passages, an open fluid passageway

leading from the displacement chamber to the chest, means separate from said valve port sealing means and carried by the eduction tube adapted upon lowering of said tube to its lowermost position to open both of said valve port sealing means, a check valve in said eduction tube above said valve chest, and a valve body in said eduction tube having a passageway opening to the annular space between the said two strings of tubing, and a check valve in said passageway, said valve being operable by the application of higher pressure to the interior of said eduction tube than to the space between the said two strings of tubing.

5. Apparatus for pneumatically lifting liquids from wells including inner and outer strings of tubing adapted to be positioned in a well, a displacement chamber carried by said outer string of tubing adjacent the lower end thereof, said inner string of tubing forming an eduction tube for delivering liquids from the chamber to the top of the well, a valve chest carried by said outer string of tubing, an exhaust passage leading from the chest to the outside of the outer string of tubing, a gas inlet passage for admitting gas under pressure to the chest, valve ports and valve port sealing means carried in said chest for controlling fluid flow through said exhaust and inlet passages, an open fluid passageway leading

from the displacement chamber to the chest, means separate from said valve port sealing means and carried by the eduction tube adapted upon lowering of said tube to its lowermost position to open both of said valve port sealing means, a check valve in said eduction tube above said valve chest, a valve body in said eduction tube having a passageway opening to the annular space between the said two strings of tubing, a check valve in said passageway, said valve being operable by the application of higher pressure to the interior of said eduction tube than to the space between the said two strings of tubing, and means for simultaneously admitting gas under pressure to the interior of said eduction tube and the annular space between said eduction tube and the outer string of tubing.

ROY L. CHENAULT.

REFERENCES CITED

The following references are of record in the file of this patent:

UNITED STATES PATENTS

Number	Name	Date
2,340,028	Taylor et al.	Jan. 25, 1944
2,356,504	Chenault	Aug. 22, 1944
2,416,359	Thompson et al.	Feb. 25, 1947