June 13, 1950

R. J. PAGLIUSO

2,511,368

SPLINED DIFFUSER NOZZLE

Filed June 30, 1947

2 Sheets-Sheet 1

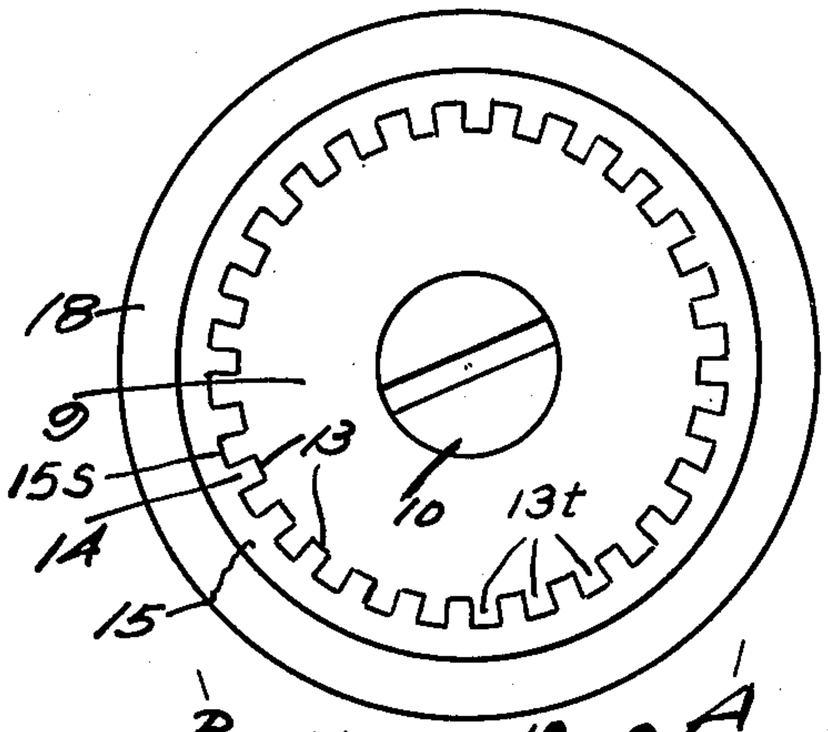

Fig. 1.

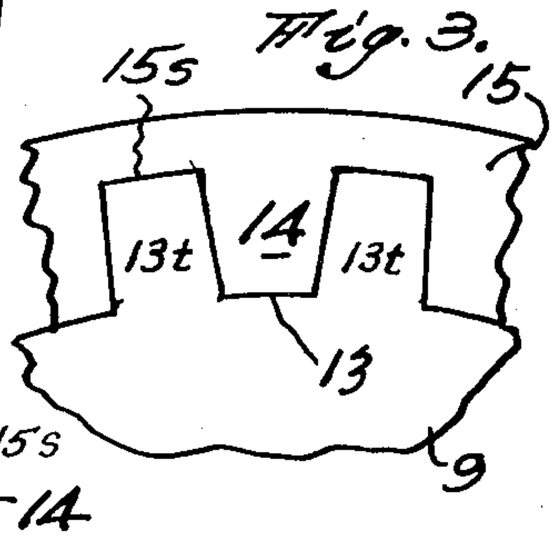

Fig. 3.

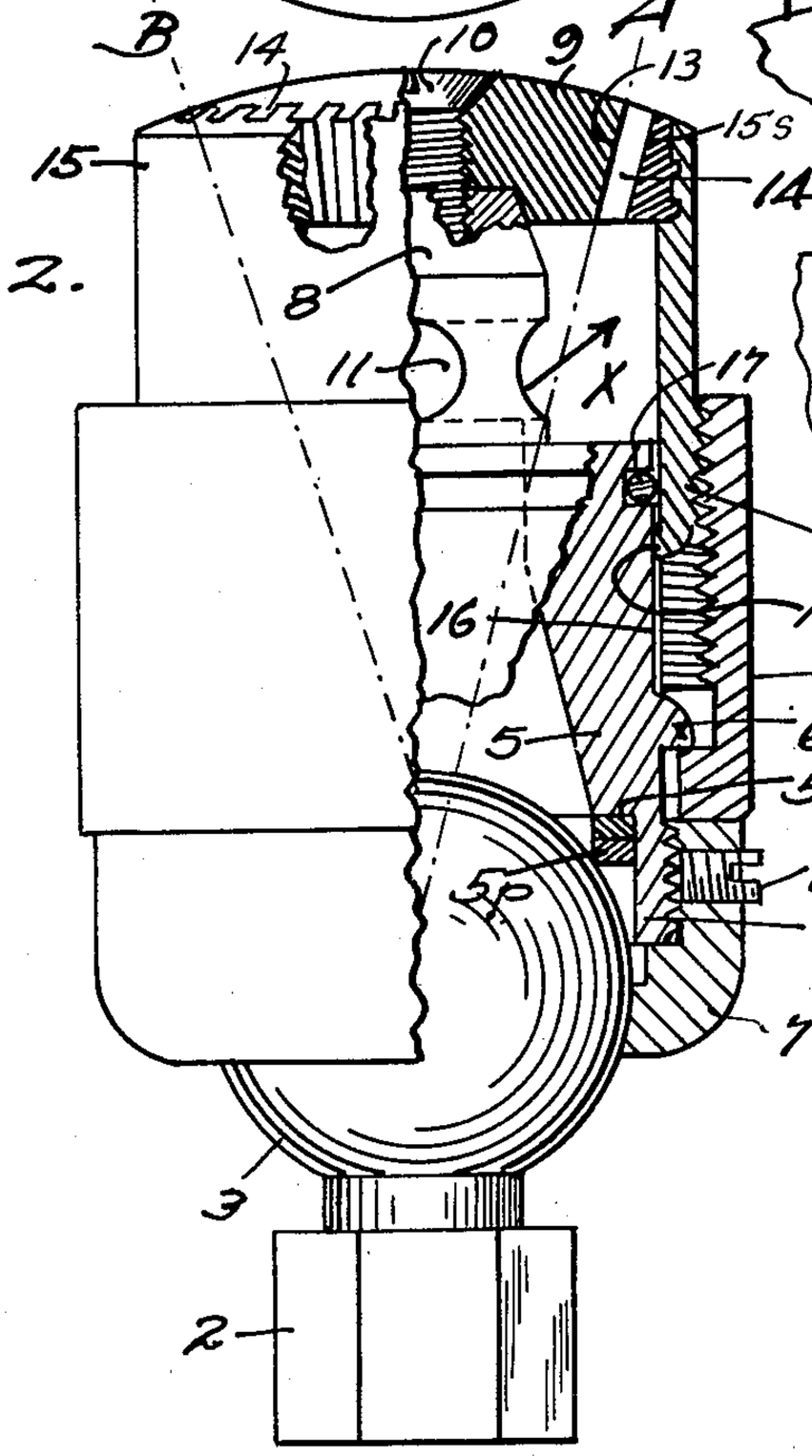

Fig. 2.

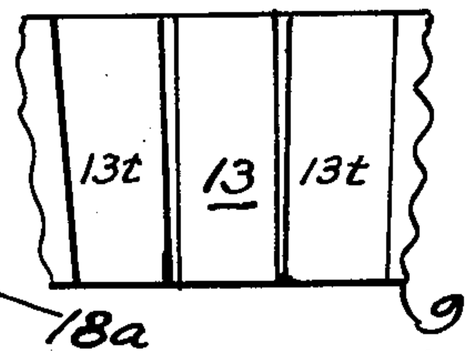

Fig. 4.

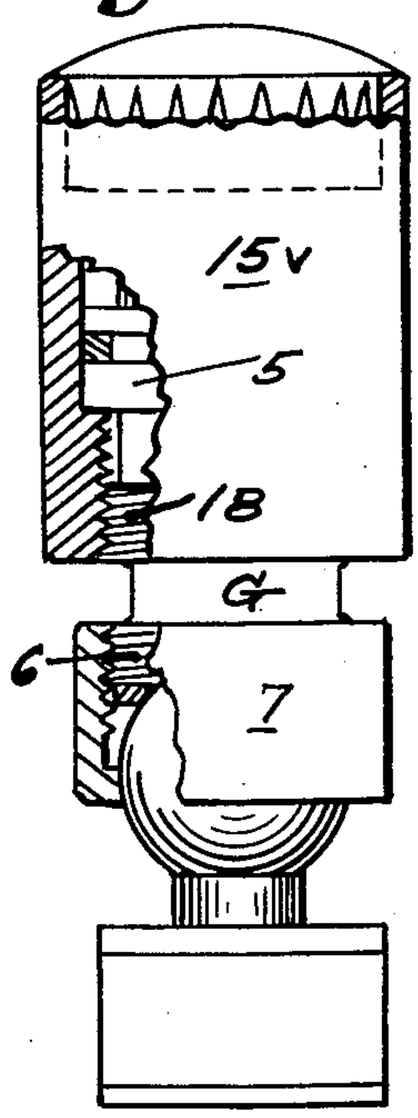

Fig. 5.

Robert J. Pagliuso,
INVENTOR;
By his attorney,
Frederick E. Maynard.

June 13, 1950 R. J. PAGLIUSO 2,511,368

SPLINED DIFFUSER NOZZLE

Filed June 30, 1947 2 Sheets-Sheet 2

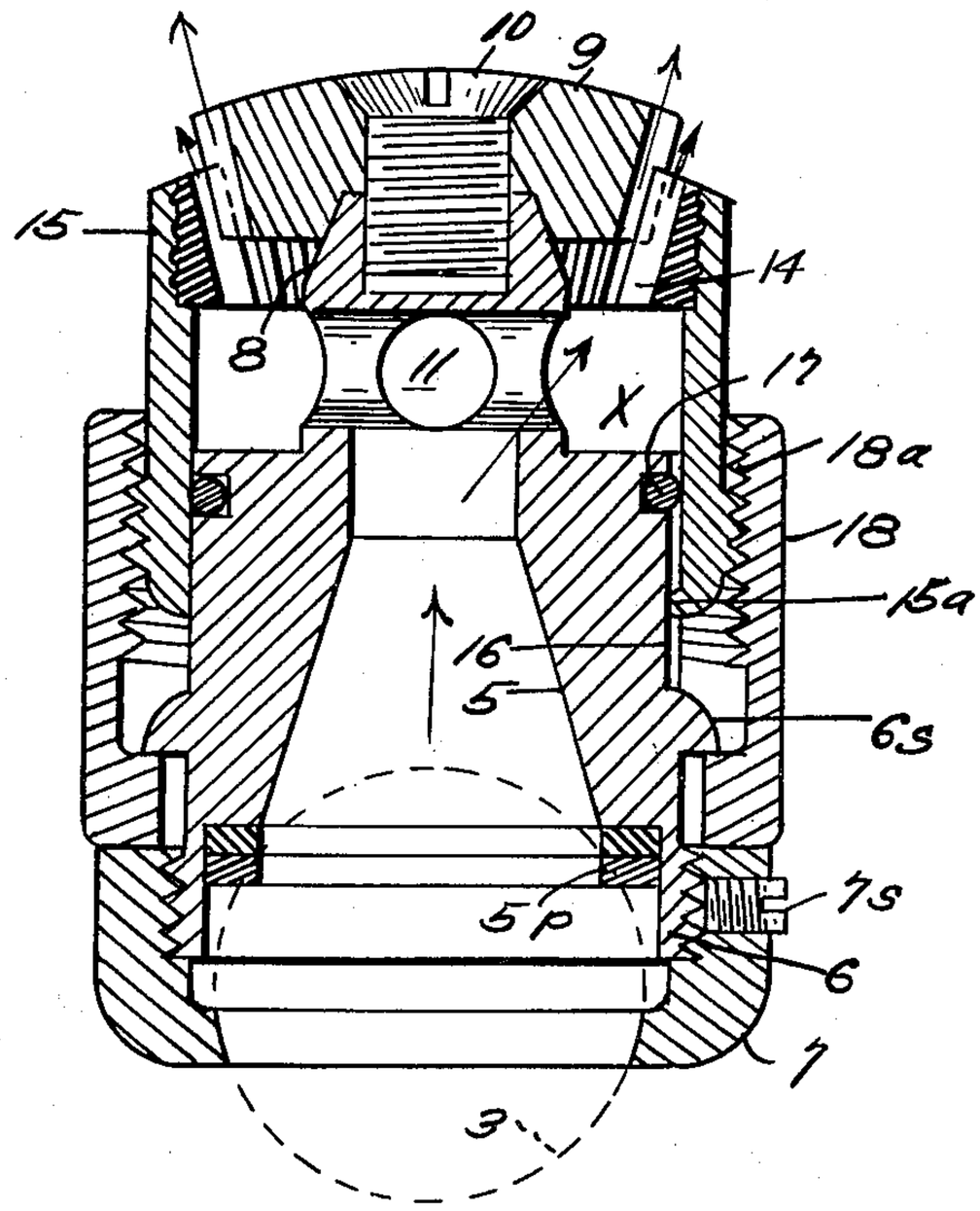

Fig. 6.

Inventor,
Robert J. Pagliuso;
By Frederick E. Maynard,
Attorney.

Patented June 13, 1950 2,511,368

UNITED STATES PATENT OFFICE

2,511,368

SPLINED DIFFUSER NOZZLE

Robert J. Pagliuso, Glendale, Calif.

Application June 30, 1947, Serial No. 758,133

2 Claims. (Cl. 299—144)

1

This invention is a fluid discharge nozzle for the ready regulation of a spray or discharged stream of the fluid.

It is highly desirable in many cases of liquid discharge to have careful control of the volume and the velocity of the discharge stream from a nozzle or spray head, as in a fine jet of flow or a heavier jet.

Further, an object of the invention is to provide a nozzle assembly in which parts are so constructed and cooperative as to not only produce a highly constricted stream of flow but which also is substantially self-cleaning by the simple adjustment of the control parts one to the other to effect a passage flushing function.

Also, an object of the invention is to provide a nozzle with means which not only regulates the shape, volume and velocity of the discharge stream but can completely shut off the flow at will.

In various forms of nozzle heads in which the stream may be generally of restricted channel flow the channels frequently become choked by solids carried by the liquid and a purpose of this invention is to provide a nozzle head wherein parts are of such construction and arrangement, and operation, that a copious and free flow may be had through the head to flush it out.

It is a purpose of the invention to provide a diffusing type of nozzle head, such as shower bath heads for example, by which one or more concentric, generally conic streams may be discharged by a device including cooperative passageway parts which coact to product a complete ring-type of discharge stream.

Particularly, a purpose of the invention is to provide a diffusing, nozzle assembly in which there is a pair of relatively movable parts having annular gangs of well fitted, complementary bore and rim splines providing for relative longitudinal movement only of said parts; the splines coacting to wholly shut off stream flow, at will, or to adjustably determine the volume of an annular gang of liquid streams permitted to escape in channels formed by longitudinal ridge surfaces of the several splines as to root surfaces in the opposed assembly part onto which the said ridge surfaces are adapted to close with a wedge function in the full closed position of the splined parts; and which ridge and root surfaces for each spline are always in parallel relation, a notable feature of this invention.

To facilitate the channel cleaning function of this invention an object is to provide one of the effective parts with a gang of stiff or hard splines and to provide, on the other part, a ring of softer

2

material whereby to secure some degree of mobility as between the gangs of splines.

Additionally, an object of the invention is to provide a highly effective ball and socket joint packing, and actuating sleeve lock.

A variant of the invention has for an object to provide a very low cost manufacturing spray head in which the body is provided with threads for a ball part and with identical threads to receive a spray controlling sleeve; these threads being on well spaced portions of the periphery of the body and separated by an intervening channel in the body so that all the threads are constantly concealed and protected against abrasion and corrosion.

The invention resides in certain advancements in this art as set forth in the ensuing disclosure and having, with the above, additional objects and advantages as hereinafter developed and whose constructions and combinations and manner of operation and details of means will be made manifest in the following description of the herewith illustrative embodiments; it being understood that modifications, variations and adaptations may be resorted to within the scope, spirit, and principles of the invention as it is claimed in conclusion hereof.

Figure 1 is a somewhat enlarged scale, tip end plan of the preferred form of the nozzle, and Figure 2 is an elevational axial section thereof.

Figure 3 is a much enlarged end-face view of portions of the intersplined nozzle members, and Figure 4 is an elevation of a portion of the periphery of the central, fixed diffusing tip to show its parallel-wall splineways.

Figure 5 is a broken away elevation of a modified form of the diffusing nozzle, of simplified construction.

Figure 6 is an axial section of the nozzle showing the valve sleeve partly retracted to open the splineways, and showing the parallel tops and bottoms of the splines and the splineways.

In Fig. 2 is shown a pipe fitting part **2** having a ball **3** on which the shower or nozzle head assembly is universally tiltable for change of direction of the axis of the water stream or spray.

On the ball is fitted an interior, hollow body **5**, for flow of water from the joinnt **2**. A feature of this invention resides in a simple and highly effective and uniform friction setting packing device. The body has a threaded end **6** and an exterior stop shoulder **6***s* and a ball fitting, fastening nut **7** turns on the threads **6** to snugly draw a graphited, friction packing ring **5***p* onto the ball face. The friction ring **5***p* is seated on a re-

silient cushion ring 5c which is sunk in the bore of the body 5, and after the nut 7 has set the ring 5p to the desired degree of frictional resistance on the ball then the nut is locked by a set screw 7s. This will keep the ball resistance constant.

The outer or forward end of the body 5 has a reduced, conical nose 8 onto which is snugly, concentrically fitted a truncated conic tip member or diffuser 9 which is removably fixed, by an axial screw 10, on said nose. Port holes 11 in the body discharge water radially to the space X back of the rear end of the diffusing tip.

Referring now more particularly to the tip 9, its periphery is provided with laterally spaced, longitudinal, splineway channels 13 between longitudinal teeth 13t, Figs. 3 and 4. A distinctive feature of channels 13 is that whatever may be the cross-section form of these channels their bottom or root faces converge toward the tip axis and they, the channels, extend axially for the full length of the conical face of the tip, irrespective of the pitch of the tip conically. This annular system of longitudinal channels—hereinafter called splineways—form at least a part of the outlet of the nozzle from the chamber X. Fig. 2 shows a root line A at a suitable angle from the axis of the tip 9 and therefore determining the angle at which a jet of water will issue from its respective splineway 13, and it will be understood that a suitable number of these splineways may pitch at the angle A, for example, while others pitch on a different angle as indicated by the root line B, and in such an adaptation the different pitch splineways would be alternately arranged around the tip and therefore effect the discharge of systems of jets in conic showers of different pitch from the axis of the spray nozzle.

In order to readily regulate the volume and the velocity of the jets from the several splineways 13 between the teeth 13t in the tip member there is provided an external sleeve valve 15 axially shiftable along and non-rotative on the body 5. The fore end of this valve is provided with an internal, annular system of keys or splines 14 which are complementary to and workably fit into the respective splineways 13, and have a conic pitch equal to their mating splineways and are of such depth that their ridge faces can shift into contact with the root faces of their splineways 13 and thereby shut off flow therefrom. In other words, the splines and their splineways are of equal depth, and the ridge faces of the splines and the root faces of the respective splineways are always parallel as clearly shown in Fig. 2, regardless of the relative positions of the sleeve valve 15.

From this it will be seen that as the valve 15 is moved axially rearwardly from the closed position, Fig. 2, the splines recede from the roots of their splineways, first allowing fine, fast flowing jets to issue from the splineways and later, slower jets will issue. If all the splineways have the same conic, root pitch as A then one conic spray will be effected from the nozzle, but if the roots pitch on different angles it will be clear that common center, differentiated sprays of conic form will issue.

While the splines and the splineways may be formed directly in the material of which the valve member and the tip member are formed and while in such a case the splines would act as to wipe and clean the root and the ridge faces thereof and prevent solids from building up and choking the parts, it is preferred that the splines be of a resilient or cushioning material such as

hard rubber or the equivalent and that the splineways be formed of a stiffer, moldable material, such as an appropriate plastics body material. Therefore the tip 9 is here shown as of such a stiff material, while the fore end of the bore of the sleeve 15 is provided with an attached bushing 15b of the desired softer material.

Further, the valve 15 has a capacity for recession to such a position as will fully uncover the rim of the tip 9 so that any material that may chance to collect in the space X can be flushed out from time to time without need of dismounting or disassembling the nozzle—an important advantage.

The rear end of the valve 15 has external threads 18a and an inturned lug 15a which is shiftable along a shallow channel 16 therefor in the contiguous face of the body 5, in which is sunk an O-packing ring 17 on which the valve rides during its change of position. An external, nonshiftable, manually rotative actuating shell 18 fits the threads 18a of the valve and is retained against end shift on the body 5 by a stop shoulder 6s in cooperation with the properly adjusted nut 7, supra.

In cases where so desired a jet of needle fineness may be had by suitable design of the jet producing members of the nozzle.

In Fig. 5 the body 5 is modified and has threads 6 for the nut 7, and threads 18 for the sleeve valve 15v both of the same and identical body diameter and pitch so that the valve can be screwed onto the body from the rear end after which the nut 7 is screwed into place. The zones of threads 6 and 18 are well spaced by a reduced peripheral groove G. The valve 15v moves to and fro without ever uncovering its threads 18 so that they do not corrode and stick the valve.

Numerous features of the instant nozzle or shower head are disclosed in the abandoned application Ser. No. 661,961, filed April 13, 1946.

A very distinctive feature of this invention is that, additively, the ring of spaces at the roots of the splineways 13 and the ring of spaces at the roots 15s, Fig. 3, separating the splines 15 in their system, form a complete circle of ducts longitudinally of the tip and the sleeve from which will issue a full circular spray as the splines back away from the central, fixed tip, as will be appreciated by observing Fig. 1. This is so even if roots of the splineways 13 are in an inner circle as to the roots 15s. The sides of the splines ride close to the radially divergent sidewalls of the splineways, Figs. 3 and 4 and as the splines are shifted inwardly from the conical tip 9 channels will be opened along the surfaces 13 and 15s, Fig. 3, which are parallel to the pitch of the conical tip. Therefore sprays will issue from these narrow channels which are gradually increased as the sleeve 15 is screwed into the threaded shell 18. The word root used herein means the bottom of the spaces between the teeth-like portions of the tip 9 and the sleeve 15, and the arrows thereat indicate stream flow along these root channels.

What is claimed is:

1. A spray nozzle comprising a stationary, hollow body having on its outer end an inwardly directed, fixed conical tip having an annular system of flow splineways in its conic face all convergent toward the axis of the body, a hollow sleeve which is open at each end and is keyed to the said body for longitudinal shift therealong and forming a fluid chamber inward from the tip and having fixed in its outer end an internal sys-

tem of splines complementary to said splineways and longitudinally movable into and from the splineways to close, or to vary the flow capacity or to fully open the splineways; said body having an external stop shoulder on its rear end, a nut, on the body, opposite to said stop shoulder, and said means including a shell enclosing said body and a part of the sleeve and being rotatively retained between said nut and said shoulder.

2. The nozzle of claim 1; the roots or bottoms of the said splineway system being parallel constantly to the opposite ridge faces of their respective sleeve splines.

ROBERT J. PAGLIUSO.

REFERENCES CITED

The following references are of record in the file of this patent:

UNITED STATES PATENTS

Number	Name	Date
2,075,589	Munz	Mar. 30, 1937
2,096,912	Morris	Oct. 26, 1937
2,127,188	Schellin et al.	Aug. 16, 1938
2,130,810	Munz	Sept. 20, 1938
2,218,827	Mott et al	Oct. 22, 1940
2,252,698	Button	Aug. 19, 1941

FOREIGN PATENTS

Number	Country	Date
192,529	Great Britain	Feb. 8, 1923