Dec. 20, 1949 O. H. HULTIN 2,491,663

PACKAGE

Filed Jan. 29, 1946 2 Sheets-Sheet 1

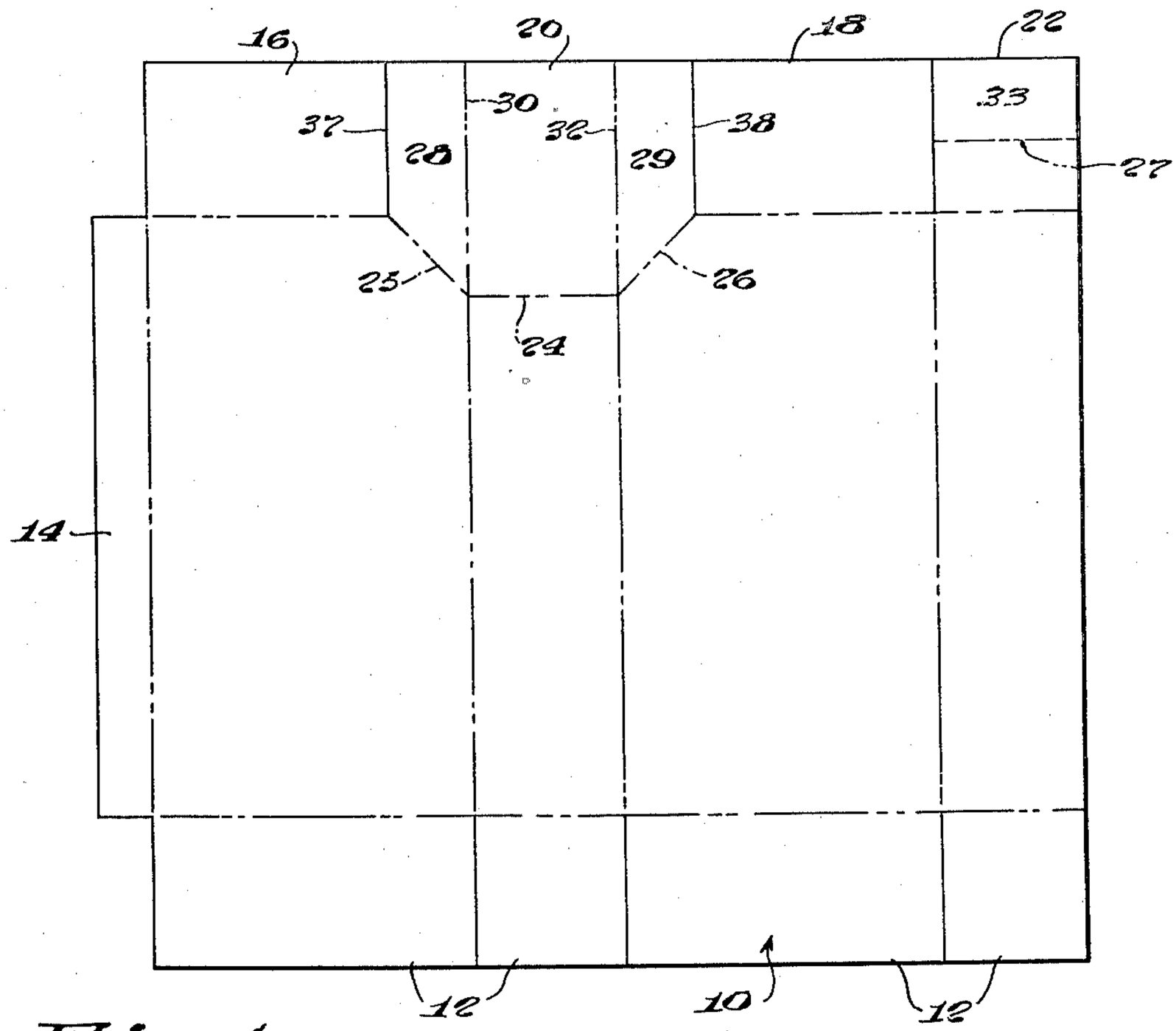

Fig. 1

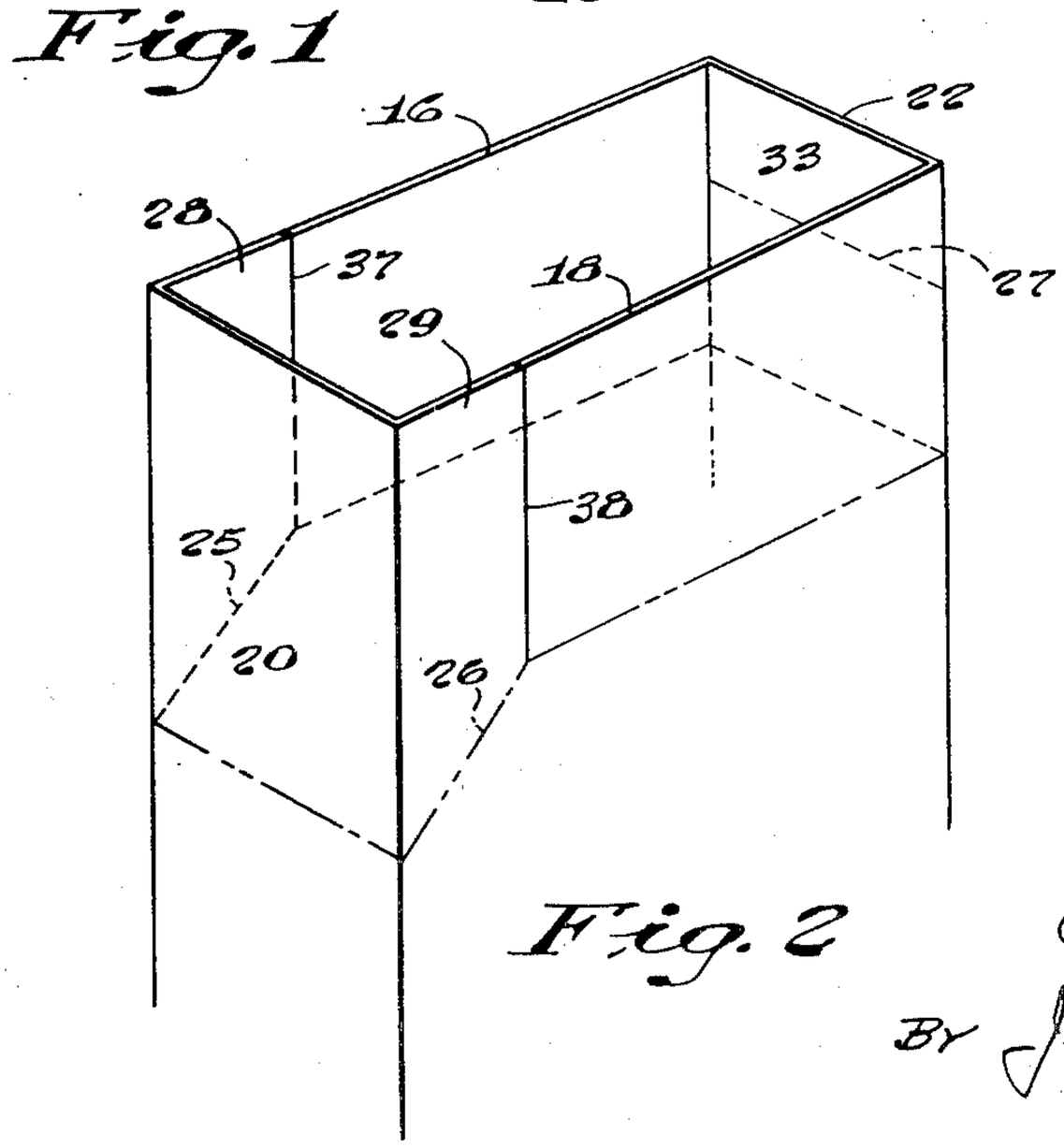

Fig. 2

INVENTOR
Oscar H. Hultin
By J. Stanley Churchill
ATTORNEY

Dec. 20, 1949 O. H. HULTIN 2,491,663

PACKAGE

Filed Jan. 29, 1946 2 Sheets-Sheet 2

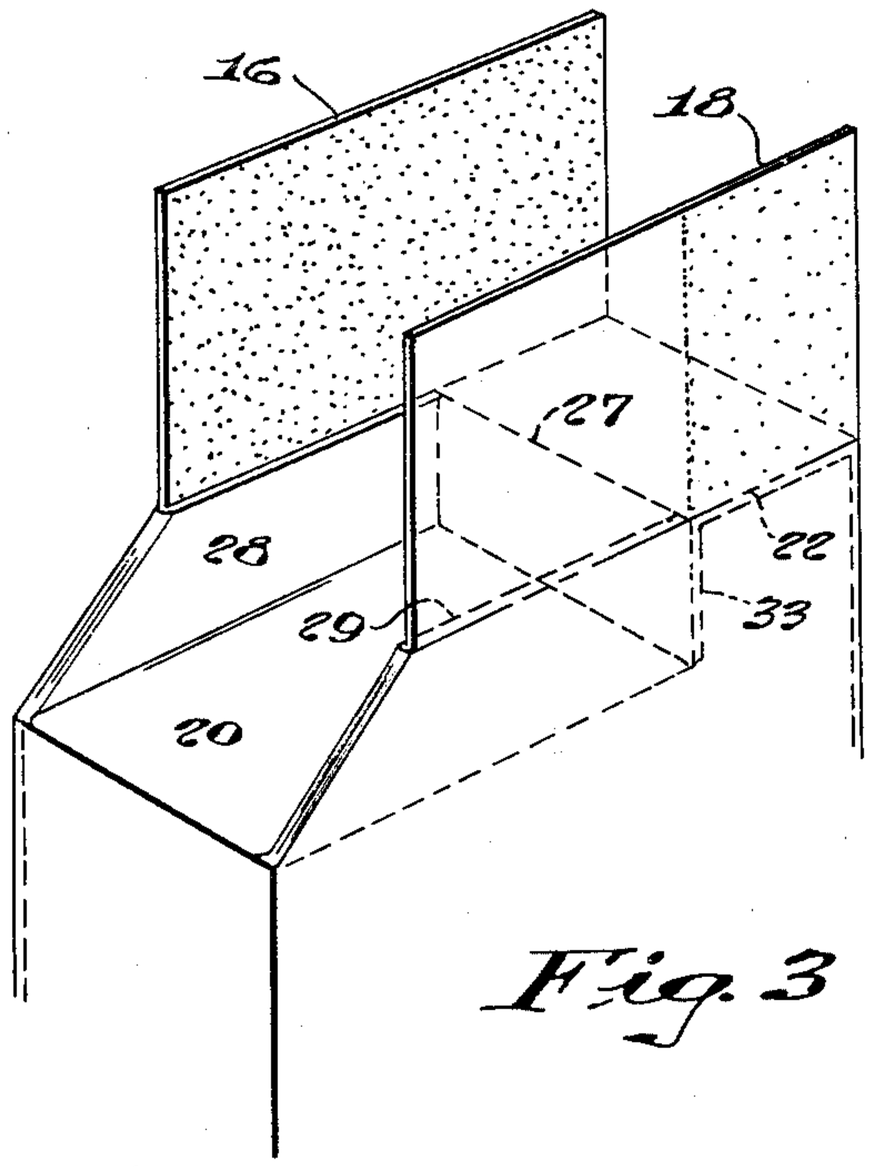

Fig. 3

Fig. 4

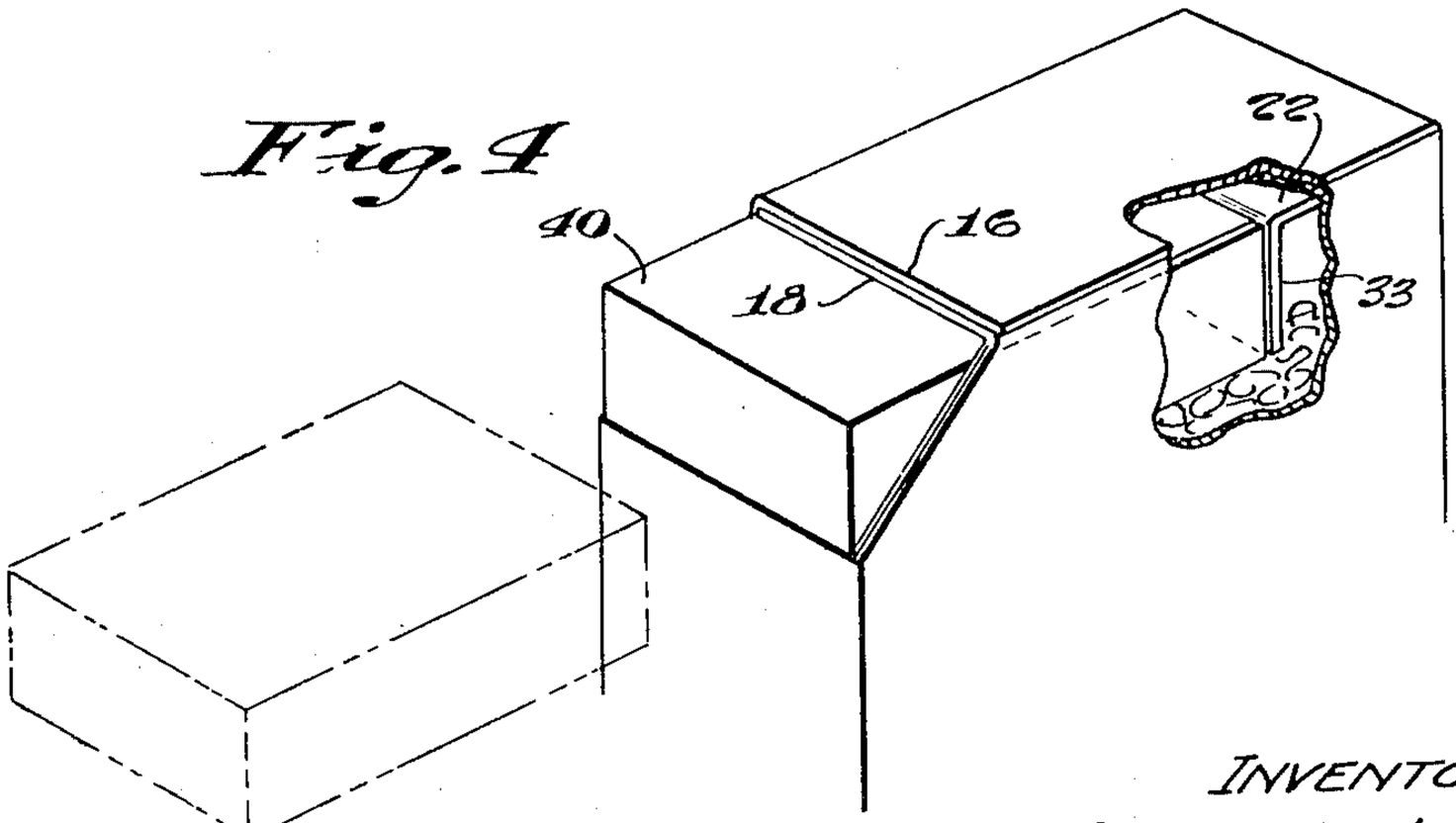

INVENTOR
Oscar H. Hultin
BY J. Stanley Churchill
ATTORNEY

Patented Dec. 20, 1949 2,491,663

UNITED STATES PATENT OFFICE

2,491,663

PACKAGE

Oscar H. Hultin, Quincy, Mass., assignor to Pneumatic Scale Corporation, Limited, Quincy, Mass., a corporation of Massachusetts

Application January 29, 1946, Serial No. 644,043

6 Claims. (Cl. 229—37)

1

This invention relates to a package and to a novel carton for forming the package.

One object of the invention is to provide a novel package for packaging one commodity within the body portion of the package and also a commodity in the form of a solid rectangular cake in a pocket forming part of one end closure and preferably the top closure of the carton.

Another object of the invention is to provide a novel construction of carton having a novel top closure providing a pocket for the reception of a rectangular cake and whose general construction is such as to enable the top closing operation, as well as the package filling operation, to be performed on existing packaging machinery with minimum modifications thereof.

With these general objects in view, and such others as may hereinafter appear, the invention consists in the package and carton hereinafter described and particularly defined in the claims at the end of this specification.

In the drawings illustrating the preferred embodiment of the invention, Fig. 1 is a plan view of the preferred form of carton blank; Fig. 2 is a detail in perspective illustrating the upper portion of a carton formed from the blank shown in Fig. 1 preparatory to the formation of the top closure; Fig. 3 is a similar view illustrating the position occupied by the various top flaps during the partial formation of the top closure, and Fig. 4 is a detail in perspective of the upper portion of the complete package with a portion broken away.

In the packaging of certain commodities, particularly bird seed, it is desirable that the package, in addition to containing the comminuted bird seed, should also have provision for operatively supporting a solid rectangular bird biscuit, and the present carton and package aims to provide a construction of carton which lends itself to the packaging operations of filling the carton with the bird seed and closing and sealing the top thereof on existing packaging machinery with minimum modifications thereof, and whose construction is such as to enable a suitable rectangular pocket to be formed in the top closure of the carton for the reception of the solid cake of bird biscuit. The formation of the pocket may be readily accomplished by suitable mechanism embodied in the packaging machinery, as will be described.

Referring now to the drawings, 10 represents a carton blank which is slit and scored to provide the usual bottom flaps 12 and side seam panel 14. The upper portion of the carton blank is slit and

2

horizontally scored to provide a pair of relatively wide side flaps 16, 18 and relatively narrow end flaps 20, 22. The one end flap 20 is arranged to be of a substantially greater length than the length of the other end flap 22 and of the side flaps 16, 18 such difference in length corresponding to the heighth or thickness of the rectangular bird biscuit or similar solid article that it is desired to operatively support in the pocket to be formed in the top closure. The horizontal score line 24 for the bottom of the end flap 20 is connected by diagonally arranged score lines 25, 26 to the adjacent horizontal score lines of the side flaps 16, 18, as shown in Fig. 1, and the second narrow flap 22 is provided with a score line 27 which is spaced from the upper end thereof a distance corresponding to the thickness of the biscuit or cake to be received within the pocket.

In the construction of the carton from the carton blank, the body portion of the carton is folded into rectangular formation, the side seam 14 sealed to the opposed end panel, and then the bottom flaps closed and sealed in accordance with the usual practice. The rectangular-shaped carton in the condition ready for receiving the bird seed, or other loose material, is shown in Fig. 2, and lends itself to handling in the standard filling or weighing machines now on the market for handling standard cartons. After the loose material has been deposited in the package, the next step in the operation is to fold inwardly the end flap 22 the upper end thereof being folded on the score line 27 so that a tab portion 33 thereof extends downwardly, or substantially perpendicular thereto, into the position shown in Fig. 3. The second end flap 20 is now folded inwardly about the score line 24, the two side wings 28, 29 folding about the vertical score line 30, 32 and also about the diagonal score lines 25, 26 so that the main body of the end flap 20 assumes a horizontal position as shown in Fig. 3 and forms, in effect, the bottom wall of the pocket, the wings 28 and 29 then extending vertically upward from said bottom wall and parallel with the side panels of the carton and forming the sides of the pocket. The carton blank is slit on the lines 37, 38 so that the side panels 16, 18 are separated from the wings 28, 29 attached to the end flap 20. The downwardly extended tab 33 of the end flap 22 cooperates with the flap 20 to form the end wall of the pocket, and when the side flap 18 is folded and adhesively secured to the first folded end flap 22, and the side flap 16 is folded and adhesively secured in overlapping relation to the side flap 18, the top closure for

the package and the top wall of the pocket is thus completed with the provision of a pocket open at one end, rectangular in shape and of a size to permit the introduction therein of a rectangular cake of bird biscuit in the manner illustrated in Fig. 4. The projecting portion 40 of the cake after the latter has been introduced into the pocket serves, in effect, to complete the rectangular shape of the package thus facilitating the commercial handling and packaging of the complete package for shipment.

From the description thus far it will be observed that the only modification in existing packaging machinery required to handle the present carton resides in the provision of suitable mechanism in the top sealing machine for folding in the two end flaps 20, 22 to form the bottom wall and one end wall of the pocket, and that otherwise the carton forming, filling and sealing operations may be performed with the existing mechanisms now employed for such purposes.

While the preferred embodiment of the invention has been herein illustrated and described, it will be understood that the invention may be embodied in other forms within the scope of the following claims.

Having thus described the invention, what is claimed is:

1. A carton comprising a body portion provided with wide side panels and relatively narrow end panels, said side panels being provided with a pair of relatively wide side flaps of less width than the width of the side panels said side flaps being sealed together in overlapping relation one of the narrower end flaps being provided with wings connecting it to the side panels and being folded inwardly under and in spaced substantially parallel relation with the folded down overlapping and adhesively sealed side flaps to provide a rectangular pocket, the remaining end flap being folded inwardly and adhesively secured to the under surface of the first folded down side flap, and forming a closure for one end of said pocket, whereby to form a pocket open at one end only for the reception of a substantially rectangular article.

2. A package comprising a carton as defined in claim 1, and a substantially rectangular article in the pocket of said carton.

3. A carton comprising a body portion provided at one end with a pair of end flaps and a pair of side flaps, said side flaps being folded down and adhesively secured in overlapping relation, one flap of the pair of end flaps being of greater length than the other end flap and being provided with side wings adapted when said one flap is folded inwardly under the folded-down and adhesively secured side flaps to constitute the bottom and side walls of a pocket, the remaining end flap having a portion which is folded inwardly and disposed directly beneath said side flaps and a portion which extends downwardly under said side flaps toward said bottom wall with the downwardly extended portion constituting the end wall of the pocket, whereby to provide a pocket open at one end only.

4. A carton, comprising: a body portion having a pair of opposed side panels and a pair of opposed end panels and also having a pair of side flaps and a pair of end flaps associated with said side and end panels, one of said end flaps and both of said side flaps being folded down and adhesively secured together in overlapping relation to form a closure for the carton and a top wall for a pocket, said side flaps being of less width than their associated side panels and terminating short of the end panel associated with said other end flap, said other end flap being wider than said one end flap and having lateral extensions at the sides thereof, said other end flap having a greater length than the remaining flaps and being folded over into a horizontal position under and lying in a plane spaced a short distance below the aforedescribed overlapping flaps to thereby form the bottom wall of said pocket, said lateral extensions of said other end flap being folded upwardly relative to said bottom wall to form the side walls of said pocket.

5. A carton, comprising: a body portion having side panels and end panels and provided at one end with a pair of end flaps and a pair of side flaps, said side flaps and one of said end flaps being of substantially the same length and being joined with their associated panels along horizontal score lines disposed in substantially a common plane, the other end flap being of greater length than said one end flap and being joined with its associated end panel along a horizontal score line disposed below the plane of the horizontal score lines of the remaining flaps, said side flaps terminating short of one vertical edge of said side panels so that said other end flap is wider than said one end flap, said other end flap having vertical score lines coinciding with the edges of its associated end panel and defining one edge of a pair of side wings extending laterally from said other end flap, the inner end of said side wings being defined by diagonal score lines diverging outwardly and extending from the ends of the horizontal score line of said other end flap to the adjacent ends of the horizontal score lines of said side flaps, said other end flap being folded inwardly along its horizontal score line to form the bottom wall of a pocket, and said side wings being folded upwardly relative to said bottom wall along said vertical score lines and also along said diagonal score lines to form the side walls of said pocket, said one end flap having a horizontal score line intermediate its ends to provide a tab portion and being folded inwardly along its horizontal score line with said tab portion folded downwardly relative thereto and cooperating with the bottom wall of said other end flap to provide an end wall for said pocket, one of said side flaps being folded inwardly along its horizontal score line and being adhesively secured to said one end flap, and the other side flap being folded inwardly in overlapping relation to said one side flap and being adhesively secured thereto for completing the closure for the container, the overlapped side flaps providing a top wall for said pocket, so that the pocket is open at one end only.

6. A carton blank, comprising: a sheet scored vertically to provide a pair of side panels and a pair of end panels, said sheet being slit vertically at spaced intervals along one horizontal edge to form a pair of end flaps and a pair of side flaps aligned with said side and end panels, respectively, said sheet having horizontal score lines defining the inner ends of said flaps, said side flaps and one of said end flaps being of substantially the same length so that the horizontal score lines associated therewith are all disposed in substantially a common plane, the other end flap being of greater length than said one end flap and said side flaps so that its horizontal score line is disposed below the plane of the horizontal score lines of said one end flap and said side flaps, said side flaps terminating short of the end panel asso-

ciated with said other end flap so that said other end flap is wider than said one end flap, said sheet having vertical score lines extending across said other end flap coinciding with the vertical score lines of its associated end panel and forming side wings extending laterally from said other end flap, said sheet having diagonal score lines diverging outwardly and extending from the ends of the horizontal score line of said other end flap to the adjacent ends of the horizontal score lines of said side flaps and defining the inner ends of said wings.

OSCAR H. HULTIN.

REFERENCES CITED

The following references are of record in the file of this patent:

UNITED STATES PATENTS

Number	Name	Date
1,896,721	Richards	Feb. 7, 1933
1,973,209	Hooker	Sept. 11, 1934
2,090,882	Zimmerman	Aug. 24, 1937
2,113,878	Culmell et al.	Apr. 12, 1938