Feb. 17, 1948. E. O. BENNETT 2,436,282

SURFACE COMBUSTION CRACKING FURNACE

Filed March 26, 1943

Fig. 1.

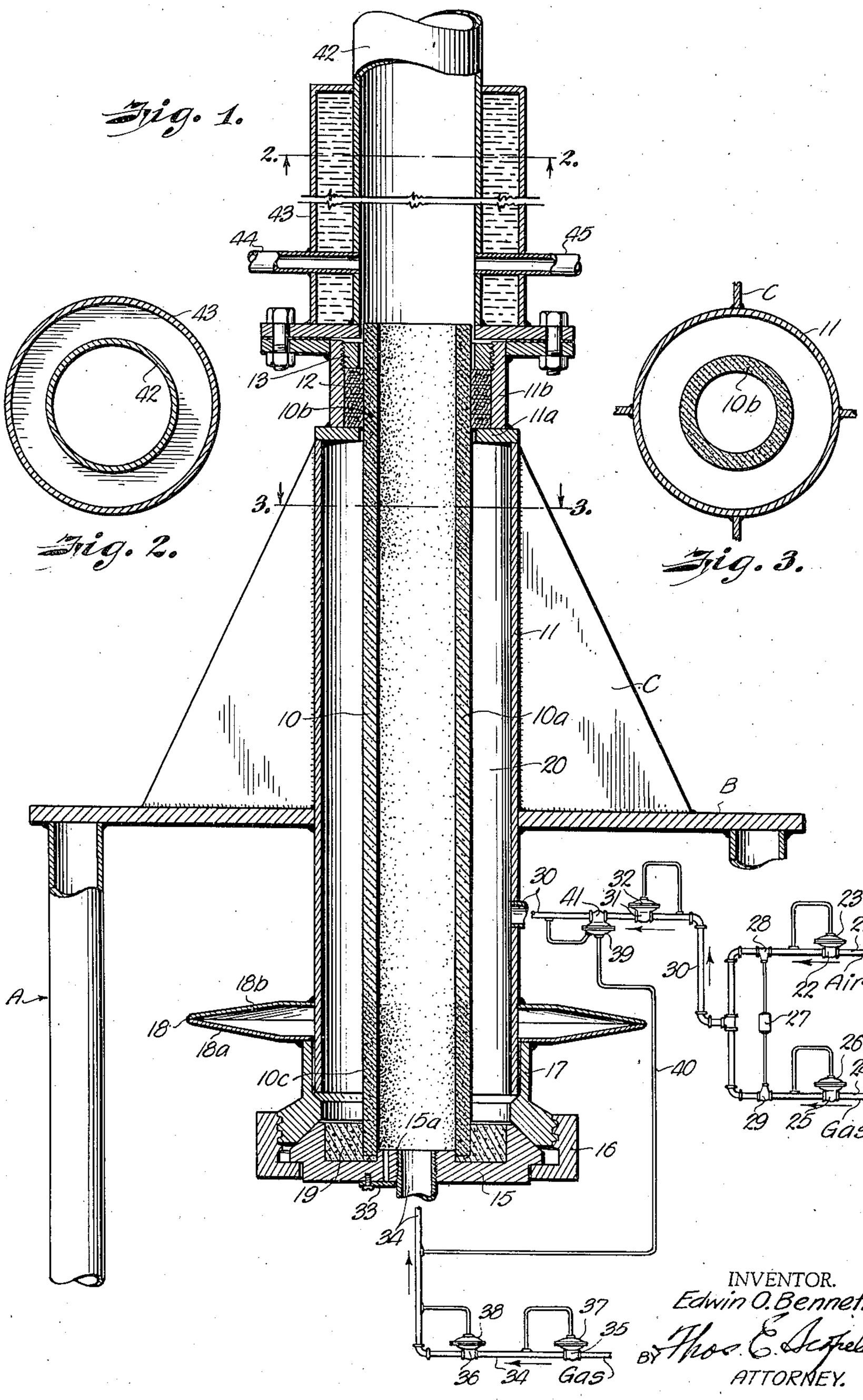

Fig. 2.

Fig. 3.

INVENTOR.
Edwin O. Bennett
BY Thos. E. Scofield
ATTORNEY.

Patented Feb. 17, 1948

2,436,282

UNITED STATES PATENT OFFICE

2,436,282

SURFACE COMBUSTION CRACKING FURNACE

Edwin O. Bennett, Ponca City, Okla., assignor to Continental Oil Company, Ponca City, Okla., a corporation of Delaware

Application March 26, 1943, Serial No. 480,705

5 Claims. (Cl. 23—277)

1

My invention relates broadly to improvements in a method of and apparatus for cracking fluids, and more particularly to a method of and apparatus for cracking a hydrocarbon fluid into its constituent parts of carbon and hydrogen to produce a superior grade of carbon black.

Carbon black is made by heating a hydrocarbon fluid in the absence of air. Heretofore carbon black has been almost entirely made by either one of two processes. One of these processes, commonly known as the "channel process," consists of burning hydrocarbon gas with insufficient air in a smoky flame. This operation is conducted in an apparatus having cold metal surfaces upon which the flame impinges. Carbon deposited by the flame on the metal surfaces is scraped off and recovered as carbon black.

The other process consists of alternately passing hydrocarbon gas through a pair of refractory furnaces which heats the gas in the absence of air. In operation it is necessary to heat the refractory of one furnace while the gas is being cracked in the other. A reversing switch is provided in the gas supply line which automatically reverses the flow of gas when the temperature of the cracking furnace becomes too low.

Both of the above processes are inefficient and expensive. The channel process yields approximately 1.5 lbs. of carbon black per 1,000 cubic feet of gas. The second process is more efficient, but it is also more expensive. It yields from 8 to 9 lbs. of carbon black per 1,000 cubic feet of gas. However, large amounts of fuel are required to heat the huge mass of refractory. The refractory must be large in order to minimize the temperature drop in the furnace during the cracking cycle. Also the reversing switch is complicated and expensive. The yield is far below the theoretical maximum due to burning of carbon by oxygen which enters the furnace during the heating cycle.

An important object of my invention is to provide a cracking furnace that is particularly suitable for making carbon black.

Another object of my invention is to provide a furnace of the above mentioned character that will maintain the cracking chamber at a constant temperature under oxygen-free conditions.

Still another object of my invention is to provide a cracking furnace of the above mentioned character wherein heat is supplied to the combustion chamber in such a way as to prevent the cracked materials from depositing on the chamber walls.

Other objects and advantages of my invention

2

will be apparent during the course of the following description.

In the drawings forming a part of this specification, and wherein like numerals are employed to designate like parts throughout same,

Fig. 1 is a vertical section of a surface combustion cracking furnace embodying my invention with the control mechanism shown in elevation and in smaller scale,

Fig. 2 is a transverse sectional view taken on the line 2—2 of Fig. 1, and

Fig. 3 is a transverse sectional view taken on the line 3—3 of Fig. 1.

In its broader aspects, the invention consists of passing hydrocarbon gas longitudinally through a porous tube of refractory material, the passage through which the gas flows being heated by surface combustion.

A combustible mixture under pressure is supplied to a confined annular space around the tube. This mixture passes through the tube to the inside thereof where it is ignited and forms a fire-lining covering the inner surface of the tube. Combustion is complete within a short distance of the surface, depending upon the porosity of the tube and differential pressure within and outside the tube. In appearance the inner surface of the tube is incandescent and no flame, as such, appears to be present. The mixture is regulated so that all oxygen is consumed by combustion. No free oxygen enters the tube to mix with the fluid being cracked. Temperatures up to 3600° F. are obtained by this method of combustion.

The flow of fluid through the tube is regulated so that the fluid is completely broken up into its component parts. As they pass through the tube, the cracked products are prevented from adhering to or depositing on the tube by the continuously moving fire-lining. These components are easily separated and collected at the discharge end of the tube. The carbon recovered by this method is a superior carbon black for use in making synthetic rubber.

More particularly, the invention comprises a surface combustion cracking furnace having a vertical tube 10 of a refractory material such as Carborundum. The middle portion 10*a* of the tube is porous, and the ends 10*b* and 10*c* are preferably impervious. The ends of the tube may be made impervious by any suitable means, such as dipping them in a Carborundum sealing cement.

Surrounding tube 10 is a metal housing 11, carried by a suitable supporting structure comprising legs A, a horizontal supporting plate B and

triangular gussets C based on the supporting plate and against the sides of the housing 11. The housing 11 is of greater diameter than the tube and supports the tube adjacent its upper end. The top 11*a* of the housing has a vertical extension or collar 11*b*, which surrounds the projecting end of tube 10. Packing 12 retained in the annular space between the tube and the collar by the threaded locking ring 13, provides a pressure tight seal between the tube and the upper end of the housing.

Expansion and contraction of tube 10 is accommodated by an expansion joint assembly on the lower end of the housing. Tubes 10 and 11 are closed at the bottom by means of an assembly consisting of a plate 15, retaining ring 16 and a slidable sleeve 17. To compensate for uneven expansion and contraction of the inner refractory tube 10 and outer metallic tube 11, there is provided a diaphragm expansion joint 18. The lower half 18*a* of the expansion joint is welded to sleeve 17 and the upper half 18*b* is welded to tube 11. To solidly fix the lower end of tube 10 within the cup-shaped portion of plate 15 a bonding material, such as a refractory ceramic mortar, fills the space within the disc surrounding the tube and when set, fixedly holds the tube within the disc. Retaining ring 16 is threaded to sleeve 17 and sets against a shoulder portion of the disc 15 in order to hold the assembly together. In operation, elongation or shortening of either of the tubes 10 or 11 different from the other tube will be compensated for by this expansion joint.

A combustible mixture, preferably fuel gas and air, is charged under pressure to the annular space 20 between tube 10 and housing 11. Air passes through pipe 21 controlled by valve 22 and pressure regulator 23, and gas passes through pipe 24 controlled by valve 25 and pressure regulator 26. A proportional meter 27, operating valves 28 and 29, regulates the flow of air and gas into a pipe 30 controlled by valve 31 and pressure regulator 32. In pipe 30 the air and gas is carbureted and charged to the annular space 20. Sufficient pressure is applied to the combustible mixture to force it through the porous middle portion 10*a* of tube 10. The mixture passes through the wall of the tube to the inside thereof where it is ignited by any suitable means. In the form of the invention shown in Fig. 1, an opening 15*a* is provided in plate 15 through which an ignition torch can be inserted to ignite the combustible vapors within the tube. Opening 15*a* is normally closed by a pivoted plate 33. It is necessary that sufficient pressure be applied to the combustible mixture in annular space 20 to force it inwardly through tube 10 at a rate greater than the velocity of flame propagation outwardly through the tube. If this is done, all danger of backfire and explosion is eliminated.

When the furnace is fired the combustible mixture permeating the porous portion 10*a* of tube 10 burns at the inner surface of the tube, which becomes incandescent. Actually no flame as such appears within the tube. This is known as surface combustion. Surface combustion in a furnace of this type develops a higher temperature than can be obtained by any other method. This is due to the completeness of combustion and the intense preheat to which the air-gas mixture in annular space 20 is subjected. A temperature as high as 3600° F. has been obtained in the furnace illustrated in the drawings.

Fluid to be cracked passes through pipe 34 into the lower end of tube 10. Pipe 34 is controlled by valves 35 and 36 operated by pressure regulators 37 and 38. As indicated by the double lead line for each of the reference numerals 30 and 34, the said pipes indicated thereby extend continuously to the annular chamber 20 and to the interior of conduit 10 respectively, without opening to the atmosphere.

The temperature to which the fluid will be raised is controlled or regulated by adjusting the amount of combustible mixture supplied to the furnace per unit volume of fluid charged to the furnace. To obtain a maximum temperature the ratio of combustible mixture to the fluid must be accurately regulated. This is done automatically by the differential pressure regulator 39 in pipe 40, which is connected at its ends to pipes 30 and 34. Differential pressure regulator 39 operates valve 41 in pipe 30 to pass an amount of fuel to the combustion tube proportioned to the quantity of fluid to be cracked. The temperature to which the fluid will be raised is also dependent upon the time required to pass it through tube 10. However, the rate of flow of the fluid through the tube is automatically regulated by the pressure at which it enters the furnace and by the length of the fire zone of tube 10. It is obvious that the pressure at which the fluid enters the furnace as well as the ratio of fluid to combustible mixture can be accurately and automatically controlled by the pressure regulators and meters controlling flow through the respective supply lines.

Since the combustible mixture is supplied to the inside of tube 10 from the outside thereof, the fluid passing through the tube has no effect upon the burning action of the mixture. Furthermore, the fluid is prevented from adhering to or depositing on the inner surface of tube 10 by the continuously moving fire-lining. As the fluid passes through the tube it is cracked or physically disrupted into its component parts. The cracked fluid together with the products of combustion pass out of the furnace through stack 42 bolted to the top of housing 11. The gases entering stack 42 are cooled by the water jacket 43 and quenching fluids such as steam or water introduced into the stack through lateral pipes 44 and 45. Any suitable means may be provided to recover and separate the cracked components of the fluid. When the furnace is used to produce carbon black, the free carbon is preferably recovered by means of an electrostatic precipitator or by suitable filters which are connected to the discharge end of the furnace shown as the stack 42. The facilities for controlling the temperature and combustion condition permit the manufacture of a carbon black particularly adapted for use in rubber manufacture, either natural or synthetic.

It is to be understood that the form of the invention herewith shown and described is to be taken as a preferred example of the same, and that various changes in the size, shape and arrangement of parts may be resorted to without departing from the spirit of my invention or the scope of the appended claims. For example, a plurality of furnaces may be efficiently operated as a unit and for certain purposes it may be necessary or desirable to alter the size or shape of the respective parts.

Having thus described my invention, I claim:

1. A surface combustion cracking furnace comprising a porous refractory tube providing an interior surface for surface combustion defining a reaction space, a conduit for the supply of hydro-

carbon gas to be cracked opening into an end portion of said tube, an outlet from the opposite end portion of said tube, a housing surrounding said tube and spaced therefrom to provide a chamber therebetween, the walls of said housing being otherwise sealed against passage of gas except through said porous refractory tube to the interior of the latter, a gaseous mixture supply conduit opening into said chamber, two branched conduits connected to said gaseous mixture supply conduit for the supply under pressure of air and fuel gas respectively to said supply conduit, means for proportioning the ratio of air to fuel gas passing from said branched conduits to said supply conduit to form a gaseous combustible mixture in the latter in which the amount of oxygen is not in excess of that required for surface combustion of the fuel gas in the said combustible mixture, a pressure regulating valve for controlling the pressure of the said gaseous combustible mixture, an additional flow controlling valve between said pressure regulating valve and said chamber, and regulating means for said flow controlling valve effective to control the flow of gaseous combustible mixture to said chamber in accordance with the pressure of hydrocarbon gas in said first-mentioned conduit, whereby sufficient pressure difference is maintained between said chamber and the interior of said tube to force the said gaseous combustible mixture from said chamber inwardly through the pores of said tube at a velocity greater than that of flame propagation outwardly through the pores of said tube, and the said gaseous combustible mixture burns by surface combustion providing an incandescent lining at the interior surface of said tube while the hydrocarbon gas passes longitudinally through said tube within the incandescent lining and is cracked by the heat of said surface combustion.

2. A surface combustion cracking furnace according to claim 1, wherein the said refractory tube has impervious end portions and a porous

central portion, and sealing means between the impervious end portions of said tube and said housing.

3. A surface combustion cracking furnace according to claim 1, wherein said tube is vertical, said inlet is at the lower end of said tube, said outlet is at the upper end of said tube, and an expansion joint between said housing and the lower end of said tube.

4. A surface combustion cracking furnace according to claim 1, including a cooling jacket surrounding said outlet, and an inlet for direct injection of a quenching fluid into said outlet.

5. A surface combustion cracking furnace according to claim 1, wherein said tube is vertical, a supporting plate for the lower end of said tube receiving said inlet, a sleeve slidably receiving the lower end of said housing, a retaining ring clamping said plate and sleeve together, an expansion joint between said housing and said sleeve, said plate having an opening therethrough communicating with the interior of said tube, and a removable closure for said opening.

EDWIN O. BENNETT.

REFERENCES CITED

The following references are of record in the file of this patent:

UNITED STATES PATENTS

Number	Name	Date
1,348,175	Hidden	Aug. 3, 1920
1,364,157	Thrane	Jan. 4, 1921
1,909,163	Brownlee	May 16, 1933
1,019,392	Weintraub	Mar. 5, 1912
1,891,859	Winter	Dec. 20, 1932
2,062,358	Frolich	Dec. 1, 1936
2,196,767	Hasche	Apr. 9, 1940
834,257	Brunler	Oct. 30, 1906
1,895,284	Hay	Jan. 24, 1933
1,592,474	Szarvasy	July 13, 1926
2,212,606	Klinker	Aug. 27, 1940
2,197,904	Terry	Apr. 23, 1940