Nov. 25, 1947. C. J. SCRANTON 2,431,663

SICKLE GUARD

Filed Sept. 14, 1944

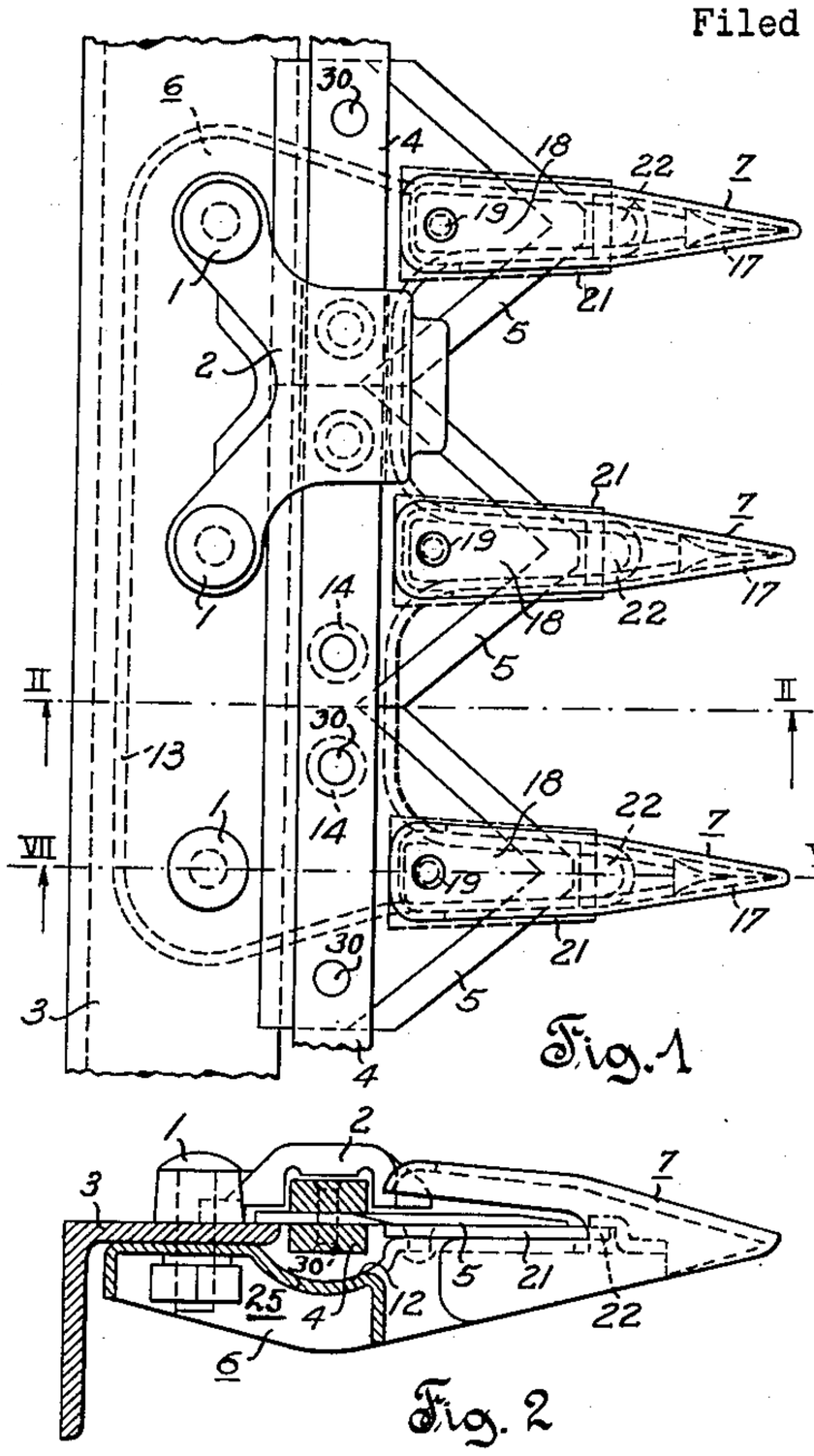

Fig. 1

Fig. 2

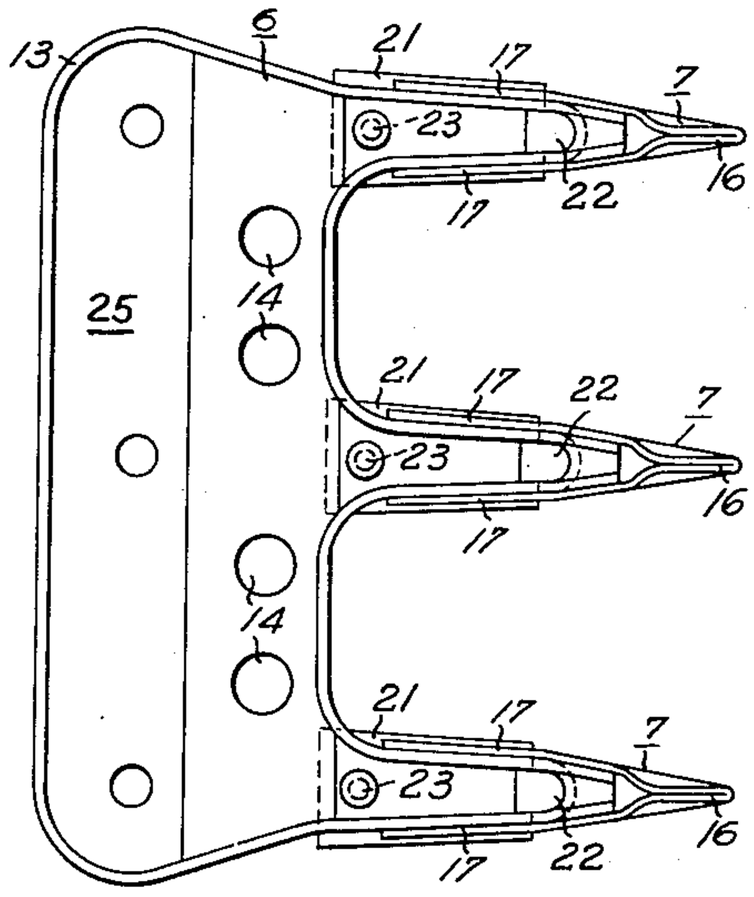

Fig. 3

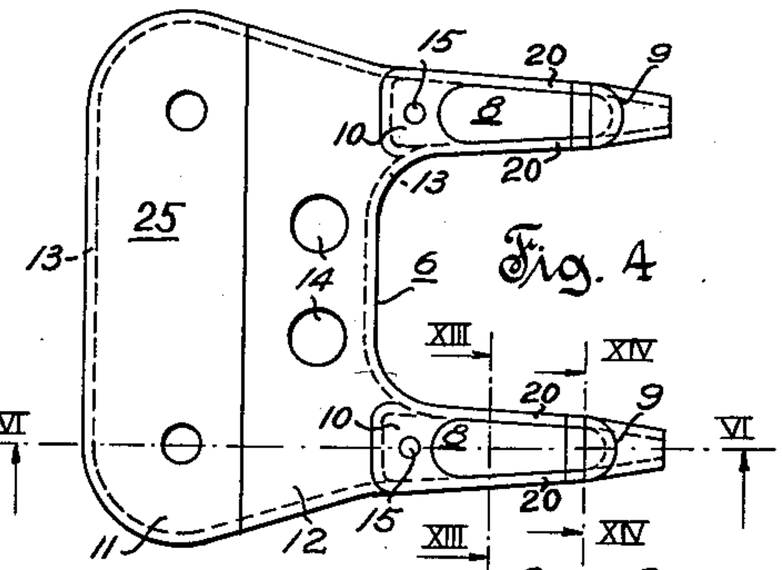

Fig. 4

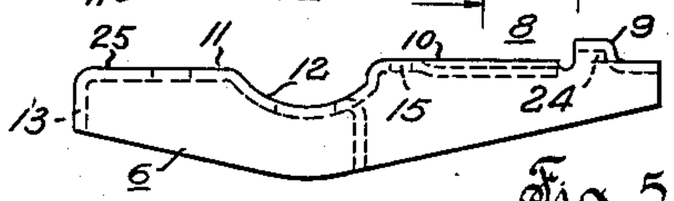

Fig. 5

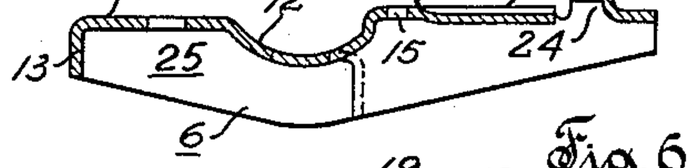

Fig. 6

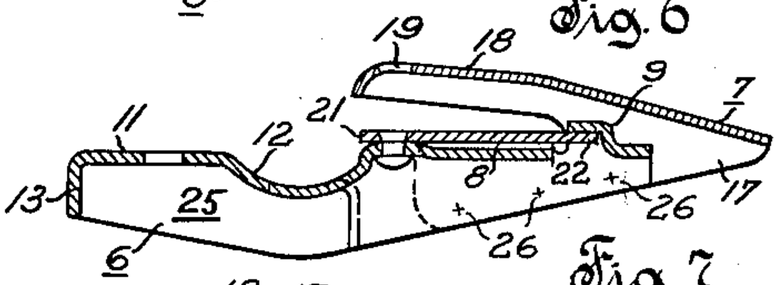

Fig. 7

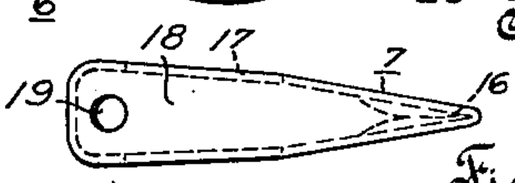

Fig. 8

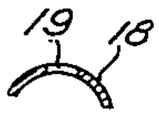

Fig. 11

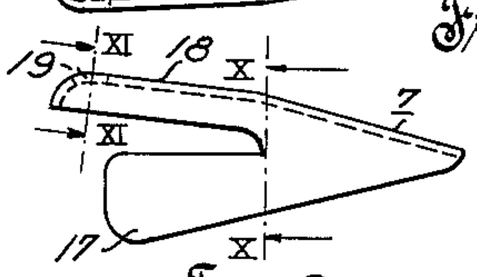

Fig. 9

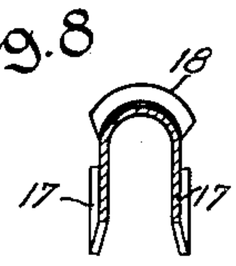

Fig. 10

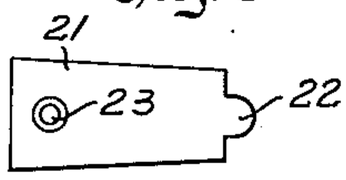

Fig. 12

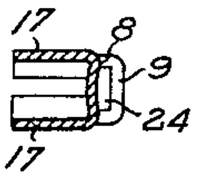

Fig. 13

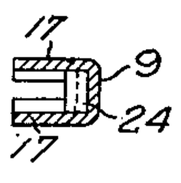

Fig. 14

Inventor
Charles J. Scranton

by K. A. Wyman
Attorney

Patented Nov. 25, 1947

2,431,663

UNITED STATES PATENT OFFICE

2,431,663

SICKLE GUARD

Charles J. Scranton, La Porte, Ind., assignor to Allis-Chalmers Manufacturing Company, Milwaukee, Wis., a corporation of Delaware

Application September 14, 1944, Serial No. 553,995

7 Claims. (Cl. 56—307)

1

This invention relates to mowing machines, harvesters and the like and more particularly to a fabricated guard construction for the reciprocating sickle or knife bar elements of such machines.

In this connection, the fabricated guard constructions heretofore known either embody one or more top plate elements which are riveted or bolted to a suitably shaped malleable iron base provided with a steel wear or ledger plate, or embody a hollow point element and a cover plate element which are riveted or bolted to a fabricated hollow base bracket. However, these known constructions are objectionable in that the first mentioned construction is nearly as heavy and at least as expensive as the integral solid malleable iron constructions, and in that the second mentioned construction is too intricate, fragile and expensive for practical purposes.

It is therefore the primary object of this invention to provide an improved lightweight, fabricated guard construction which is extremely durable and inexpensive to manufacture.

A further object of this invention is to provide an improved guard construction embodying correlations of elements shaped and arranged to afford all of the advantages with respect to strength, rigidity, and ease of attachment and removal obtained with the malleable iron structures heretofore employed.

The construction and advantages of guards embodying the invention will become readily apparent as the disclosure progresses and more particularly points out features considered of special importance. And accordingly, the invention may be considered as consisting of the various details of construction, correlations of elements, and arrangements as is more fully set forth in detailed description and in the appended claims, reference being had to the accompanying drawing, in which:

Fig. 1 is a plan view of a partial mower bar assembly embodying the invention;

Fig. 2 is a section taken on line II—II of Fig. 1;

Fig. 3 is a bottom view of the sickle guard shown in Fig. 1;

Fig. 4 is a plan view of a modified construction illustrating an application of the invention to a two prong guard structure with the tips removed;

Fig. 5 is an end view of the structure shown in Fig. 4;

Fig. 6 is a section taken on line VI—VI of Fig. 4;

Fig. 7 is a section taken on line VII—VII of Fig. 1 with the mower bar and sickle element removed;

2

Fig. 8 is a plan view of the separately formed tip member;

Fig. 9 is a side view of the tip member shown in Fig. 8;

Fig. 10 is a section taken on line X—X of Fig. 9;

Fig. 11 is a section taken on line XI—XI of Fig. 9;

Fig. 12 is a plan view of the ledger plate;

Fig. 13 is a section taken on line XIII—XIII of Fig. 4; and

Fig. 14 is a section taken on line XIV—XIV of Fig. 4.

Referring to the drawing, it is seen that a sickle guard embodying the invention may be removably secured, as by means of bolts 1 and a clip element 2, to a stationary mower bar 3 in operative relation to a conventional reciprocating sickle or knife bar 4 to which are riveted individual knife elements 5, and that such a guard may include separately formed and integrally united sheet metal body and tip members 6 and 7, respectively. However, the primary function of clip element 2 is to provide an upper guide for sickle bar 4 and therefore it is unnecessary to provide a clip element for each guard.

Referring more particularly to Figs. 4–6 inclusive, 13 and 14, it is seen that body member 6 comprises a piece of sheet metal shaped to provide an integral, marginally flanged structure including at least one forwardly tapering prong part of inverted U-shape cross-section (see Fig. 13) having a top portion presenting a ledger plate supporting surface 8 including an approximately flat rear portion 10 and forwardly extending edge portions 20 united by a depressed, concave wall portion presenting, as best shown in Figs. 2 and 6 an upwardly offset, ledger plate tongue receiving arch 9 disposed adjacent and extending above the forward end of ledger plate supporting surface 8. Member 6 also includes an elongated body part 25 which extends approximately at right angles to the prong part and presents an approximately flat, coextensive rear surface 11 adapted to abut one side of mower bar 3 and a coextensive, upwardly concave, apertured front surface 12 which merges with rear surface 11 and with the substantial flat rear portion 10 of surface 8 in depressed relation thereto (see Figs. 2, 5, 6 and 7). Marginal strengthening flange 13, which is preferably made continuous except at the forward end of the prong part (see Figs. 2, 4, 5, 6, 13 and 14), constitutes the plain side walls of such part. The apertures 14 in concave surface 12 are primarily for the purpose

of obtaining access to the rivets 30 securing knife elements 5 to sickle bar 4 and are so arranged that such rivets may be alined with the apertures by a normal reciprocating movement of bar 4. In addition, apertures 14 also function to prevent an accumulation of material on surface 12 which might interfere with the operation of the sickle. The rear ledger plate supporting portion of the prong part is preferably provided with a rivet receiving hole 15.

Referring now to Figs. 8–10, inclusive, it is seen that tip member 7 comprises a piece of sheet metal shaped to provide an integral hollow structure having a partially closed point portion 16 formed by rearwardly diverging, plain side walls 17 and an arched top wall 18 uniting the forward end portions of side walls 17 and extending rearward therefrom in spaced, overlying, diverging relation with respect to the top rear edges of the side walls; the space between the exposed upper edges of the side walls and the opposed edges of the top wall being sufficient to accommodate a ledger plate and the sickle element reciprocating thereon as is best indicated in Figs. 2 and 7. In addition, the divergence of side walls 17 is such that a tip member 7 may be in effect telescopingly engaged with the forwardly tapering prong part on body member 6 as is best indicated in Fig. 3. In this connection, the rear portion of arched top wall 18 is provided with an aperture 19 which is alined with aperture 15 in the prong part when the tip and body members are assembled as shown in Fig. 7.

It is preferable, prior to assembling the tip and body members, to mount and secure on each prong part of the body member a ledger plate 21 having a forwardly projecting tongue part 22 snugly disposed beneath upwardly offset arch portion 9 and a rivet receiving aperture 23 which is alined with aperture 15 in the prong part when tongue 22 is correctly inserted beneath arch 9 as is clearly shown in Figs. 2 and 7. The coaction between arch 9, which provides a recess 24 in the top portion or wall of the prong part, and tongue 22 is such as will insure alinement of ledger plate hole 23 with hole 15 in the prong part and will enable the ledger plate to be rigidly and correctly positioned on the prong part, either before or after tip member 7 has been secured thereto, simply by inserting a rivet through holes 15 and 23 and peening over the underside of same as shown in Figs. 2 and 7. If for any reason, the ledger plate end of the rivet projects slightly above such plate, it may be readily ground flush with same so as not to interfere with the operation of the sickle element.

Completion of the sickle guard is readily effected simply by positioning a tip member 7 on each prong part of body member 6 and integrally uniting same by spot welding or otherwise fusibly uniting the side walls 17 of the tip member to the enclosed, contiguous, abutting side wall portions of the prong part with the upper edges of walls 17 supportingly abutting the overhanging underside portions of ledger plate 21 as is best shown in Figs. 2 and 7. A spot welding of such walls is preferred (see welds designated 26 on Fig. 7) as both side walls of the tip member can be readily, simultaneously welded to the opposite sides of a prong part with a minimum of time, effort and equipment. In addition, the shape of the tip member and prong part is such as to afford maximum strength and rigidity with a minimum of welding and while they may be secured together by brazing or by welds other and differently located from those disclosed, the spot welding shown is preferred. When the guard is once assembled and united as herein disclosed, tip member 7 cannot be separated from the prong part of body member 6.

However, ledger plate 21 can be readily removed, if desired, even when the guard is secured to mower bar 3, simply by chipping or otherwise eliminating the peened over portion of the rivet and knocking same upward through hole 19 in the overlying top wall portion of tip member 7 and a new ledger plate inserted and riveted in place. Hole 19 permits bucking-up the head end of the rivet while the lower end thereof is being peened over. In addition, the individual sickle knife elements 5 may also be readily removed and replaced when the guards are secured to mower bar 3 simply by shifting sickle bar to position the knife element securing rivets in line with the apertures 14 in concave wall 12; the normal stroke of sickle bar 4 being sufficient (the stroke is usually equal to the width of a knife element to effect an alinement of the rivets and holes even on those guards assembled with a clip element 2. In replacing a knife element, the rivets are inserted and bucked-up by inserting a suitable tool through an alined aperture 14 in concave surface 12.

Sickle guards constructed in accordance with this invention provide a simplified and durable construction, and although certain features render the guard particularly adapted for use on harvesters as distinguished from mowers, many of the features are of general application. And it should therefore be understood that although certain of the features and details herein shown and described for purposes of illustration represent a preferred embodiment of the invention, it is not desired to limit the invention to such features and details as various modifications within the scope of the appended claims may occur to persons skilled in the art.

It is claimed and desired to secure by Letters Patent:

1. A sickle guard body member comprising a piece of sheet metal shaped to provide an integral marginally flanged structure including a mower bar engaging body part and at least one forwardly projecting ledger plate supporting prong part, said prong and body parts presenting a substantially continuous top surface coextensive with the transverse width thereof comprising an approximately flat surface at the rear of the prong part, an approximately flat portion at the rear of the body part spaced from said flat prong part and at least coextensive in width therewith, and an upwardly concave intermediate portion coextensively merging with said flat prong and body portions in depressed relation thereto, said flat surface of the prong part including forwardly extending edge portions united by a slightly depressed concave wall portion, said prong part having a forward end portion of its top surface shaped to provide a recess therein adapted to coact with said depressed concave wall portion to receive snugly the tongue portion of a ledger plate mounted on the flat surface portion and the forwardly extending edge portions of said prong part.

2. A sickle guard comprising a single piece of sheet metal shaped to provide a body member having a forwardly projecting prong part including side walls and a top wall presenting a substantially flat ledger plate supporting rear portion merging with a forwardly extending and

slightly depressed central portion providing top side edge surfaces substantially flush with said flat rear portion and an upwardly offset forward end portion providing an arch extending above said centrally depressed portion a sufficient distance to receive snugly therebeneath the tongue portion of a ledger plate, and a ledger plate mounted on said flat portion and said top side edge surfaces, said ledger plate having its side edge portions disposed in overhung relation with respect to the side walls of said prong part and its forwardly projecting tongue portion disposed beneath said arch.

3. A sickle guard comprising a single piece of sheet metal shaped to provide a body member having a forwardly projecting prong part adapted to have a separately formed tip member secured thereto, said prong part including side walls and a top wall presenting a substantially flat ledger plate supporting rear portion merging with a forwardly extending and slightly depressed central portion providing top side edge surfaces substantially flush with said flat rear portion and an upwardly offset forward end portion providing an arch extending above said centrally depressed portion a sufficient distance to receive snugly therebeneath the tongue portion of a ledger plate, and a single piece of sheet metal shaped to provide a tip member including a hollow point structure partially enclosing the forward end of said prong part and having side wall portions and a top wall portion extending rearward from said point structure in spaced relation with respect to each other, said side wall being abuttingly fixedly secured to the outer surfaces of the side walls of said prong part with the upper edges of the side wall portion flush with said top side edge surface and said top wall portion disposed in spaced overlying relation with respect to said prong part and with respect to the upper edges of said side portions.

4. A sickle guard comprising a single piece of sheet metal shaped to provide a body member having a forwardly projecting prong part adapted to have a separately formed tip member secured thereto, said prong part including side walls and a top wall presenting a substantially flat ledger plate supporting rear portion merging with a forwardly extending and slightly depressed central portion providing top side edge surfaces substantially flush with said flat rear portion and an upwardly offset forward end portion providing an arch extending above said centrally depressed portion a sufficient distance to receive snugly therebeneath the tongue portion of a ledger plate, a ledger plate mounted on said flat portion of the prong part and on said top side edge surfaces and having side edge portions disposed in overhung relation with respect to the side walls of said prong part, and a single piece of sheet metal shaped to provide a tip member including a hollow point structure partially enclosing the forward end of said prong part and having side wall portions and a top wall portion extending rearward from said point structure in spaced relation with respect to each other, said side wall portions being abuttingly fixedly secured by means of a weld to the outer surfaces of the side walls of said prong part with the upper edges of said side portions supportingly abutting the underside of the overhung edge portions of said ledger plate and said top wall portion being disposed in spaced overlying relation with respect to said prong part and with respect to the upper edges of said side portions.

5. A sickle guard body member comprising a piece of sheet metal shaped to provide an integral marginally flanged structure including a mower bar engaging body part and at least one forwardly projecting ledger plate supporting prong part adapted to have a separately formed tip member secured thereto, said prong and body parts presenting a substantially continuous top surface coextensive with the transverse width thereof comprising an approximately flat portion at the rear of the prong part, an approximately flat portion at the rear of the body part spaced from said flat prong part and at least coextensive in width therewith, an upwardly concave intermediate portion coextensively merging with said flat prong and body portions in depressed relation thereto, said prong part having a forward end portion of its top surface shaped to provide a recess therein adapted to receive snugly the tongue portion of a ledger plate mounted on the flat surface portion of the prong part, and a single piece of sheet metal shaped to provide a tip member including a hollow point structure partially enclosing the forward end of said prong part and having side wall portions and a top wall portion extending rearward from said point structure in spaced relation with respect to each other, said side wall portions being abuttingly secured to the outer surfaces of the side walls of said prong part and with their upper surfaces flush with the flat surface portion of said prong part, said top wall portion being disposed in spaced overlying relation with respect to said prong part and with respect to the upper edges of said side portions.

6. A sickle guard comprising a single piece of sheet metal shaped to provide a body member having a forwardly projecting prong part adapted to have a separately formed tip member secured thereto, said prong part including side walls and a top wall presenting a substantially flat ledger plate supporting rear portion and an offset front portion providing a recess adapted to receive therein the tongue portion of a ledger plate, a ledger plate mounted on said flat portion of the prong part and having a forwardly projecting tongue portion disposed in said recess, said ledger plate having its side edge portions disposed in overhung relation with respect to the side walls of said prong part, and a single piece of sheet metal shaped to provide a tip member including a hollow point structure partially enclosing the forward end of said prong part and having side wall portions and a top wall portion extending rearward from said point structure in spaced relation with respect to each other, said side portions being abuttingly fixedly secured by means of a weld to the outer surfaces of the side walls of said prong part and with their upper edges supportingly abutting the underside of the overhung edge portions of said ledger plate, said top wall portion being disposed in spaced overlying relation with respect to said prong part and with respect to the upper edges of said side portions.

7. A sickle guard comprising a single piece of sheet metal shaped to provide a body member having a forwardly projecting prong part adapted to have a separately formed tip member secured thereto, said prong part including side walls and a top wall presenting a substantially flat ledger plate supporting rear portion and a front portion shaped to provide a recess adapted to receive therein the tongue portion of a ledger plate, a ledger plate mounted on said flat por-

tion of the prong part and having a forwardly projecting tongue portion disposed in said recess, said ledger plate having its side edge portions disposed in overhung relation with respect to the side walls of said prong part, and a single piece of sheet metal shaped to provide a tip member including a hollow point structure partially enclosing the forward end of said prong part and having side wall portions and a top wall portion extending rearward from said point structure in spaced relation with respect to each other, said side portions being abuttingly fixedly secured to the outer surfaces of the side walls of said prong part with their upper edges underlying the overhung edge portions of said ledger plate, said top wall portion being disposed in spaced overlying relation with respect to said prong part and with respect to the upper edges of said side portions.

CHARLES J. SCRANTON.

REFERENCES CITED

The following references are of record in the file of this patent:

UNITED STATES PATENTS

Number	Name	Date
2,278,393	Vutz	Mar. 31, 1942
1,770,709	Patterson et al.	July 15, 1930
2,259,750	Johnson	Oct. 21, 1941

FOREIGN PATENTS

Number	Country	Date
2,251	Great Britain	1906
26,715	Great Britain	1913
18,464	Great Britain	1901
448,220	Germany	Aug. 10, 1927