Oct. 7, 1947. K. EGGE 2,428,362

MEANS FOR RECOVERING COATING MATERIAL FROM MELTED ELECTROLYTICALLY COATED CONTINUOUS STRIP MATERIAL

Filed March 23, 1943

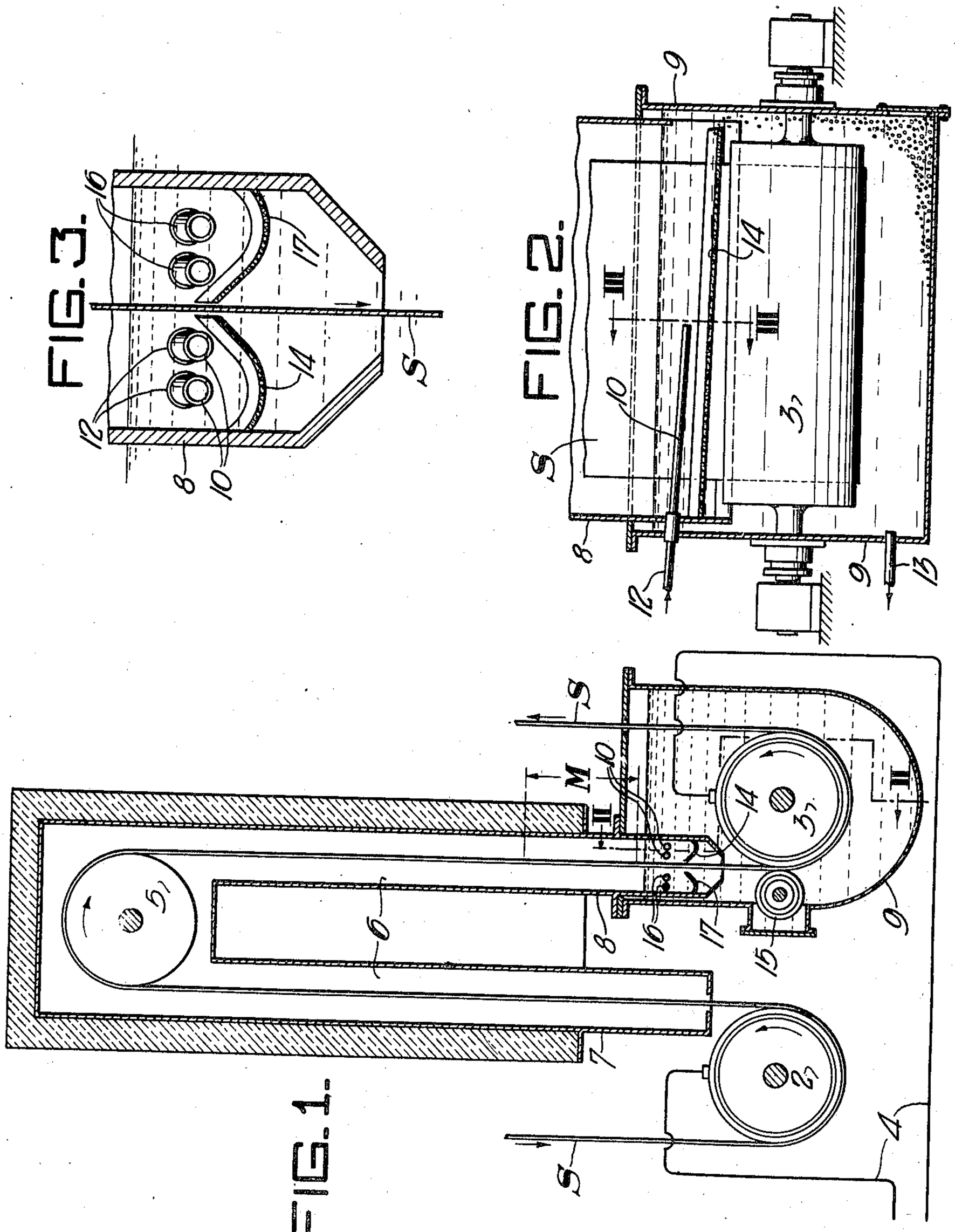

FIG. 2.

FIG. 3.

FIG. 1.

INVENTOR:
KLAUS EGGE,
BY: John E. Jackson
HIS ATTORNEY.

Patented Oct. 7, 1947

2,428,362

UNITED STATES PATENT OFFICE

2,428,362

MEANS FOR RECOVERING COATING MATERIAL FROM MELTED ELECTROLYTICALLY COATED CONTINUOUS STRIP MATERIAL

Klaus Egge, Mount Lebanon, Pa., assignor to Carnegie-Illinois Steel Corporation, a corporation of New Jersey

Application March 23, 1943, Serial No. 480,224

3 Claims. (Cl. 266—4)

1

This invention relates to electrolytically coated continuous strip material, especially tin coated steel strip and particularly to improvements in means for collecting and recovering any excess tin or coating material and scale discharged from the surface of the strip during and after the bright melting thereof.

It is now common practice to apply a coating, such as tin, to continuous length strip material, such as iron or steel, by electrolytic means. After the strip is electrolytically tin coated, it is usually passed through a melting unit wherein the coating thereon is melted so as to provide a finished strip having a bright luster and smooth, even finish. Sometimes the melting is done by passing the strip through hot oil, heating by electrical inductance, or by subjecting the strip to electrical resistance. In the resistance melting, the strip is usually disposed in a vertical plane during the melting of the coating thereon and then passes around a horizontal disposed roll, which is usually a conductor roll for supplying the electrical power to the strip for such resistance melting. This conductor roll is usually disposed in a tank containing a quenching medium which is adapted to quench the strip and coating immediately after the melting operation. Such a melting unit and quenching tank arrangement is disclosed in the copending application of Ewart S. Taylerson, Serial No. 447,966, filed June 22, 1942.

It has been found that as the strip passes vertically down into the quenching tank that small globules of the tin or coating material and pieces of scale are carried into the tank by the strip as it passes thereinto and fall free from the surface of the strip into the quenching medium in the space between the conductor roll therein and the strip and would lodge therebetween and become pulverized. This excess tin or coating material and scale not only tended to scratch the surface of the strip and the roll but also caused flashings of electric current from the strip to the roll thereby resulting in burning and pitting the roll surface. This condition necessitated relatively frequent resurfacing and replacement of the conductor roll which was inconvenient, as well as expensive. Furthermore, the valuable tin or other coating material was lost under such conditions. It is to an improved means or apparatus for preventing this excess tin or coating material and scale from being disposed between the conductor roll and the strip so that the tin or coating may be recovered that the present invention relates.

Accordingly, it is the general object of the

2

present invention to provide an improved means or apparatus for preventing any excess tin or coating material and scale from passing into the space between the conductor roll and strip in the quenching tank.

It is a more specific object of the invention to provide an improved means or apparatus for introducing a fluid under pressure across the path of the strip as it enters the quenching tank so as to cause the quenching medium therein to circulate whereby any excess tin or coating material and scale are prevented from passing into the space between the strip and the conductor roll and are caused to drop to the bottom of the tank.

It is a further object of this invention to provide an improved method for preventing any excess tin or coating material and scale from passing into the space between the conductor roll and the strip in the quenching tank by introducing a suitable fluid or the quenching medium under pressure into the lower end of the heating unit across the path of the strip as it passes therethrough so that the excess tin or coating material and scale are carried to one side of the tank and caused to drop to the bottom thereof.

Various other objects and advantages of this invention will be more apparent in the course of the following specification and will be particularly pointed out in the appended claims.

In the accompanying drawings there is shown, for the purpose of illustration, an embodiment which my invention may assume in practice.

In these drawings:

Figure 1 is a vertical section through the melting unit and the quenching tank of an electrotinning line showing my invention incorporated therewith;

Fig. 2 is a sectional view taken on line II—II of Figure 1; and

Figure 3 is an enlarged sectional view taken on line III—III of Figure 2.

Referring more particularly to the drawings, S indicates a continuous length coated strip as it is delivered from the electroplating bath of a continuous electrotinning line with the strip traveling in the direction of the arrows, as shown in Figure 1 of the drawings and which is conveyed therethrough and therefrom by suitable driving means (now shown). After the strip has been electrolytically coated, it is passed through a heating unit designed to melt the deposited tin or coating thereon with such heating being effected by any suitable means.

For example, resistance melting may be employed including energized conductor rolls 2 and 3

which are connected to a suitable source of power by means of the electric lines 4. There is provided an intervening upper deflector roll 5 with the coated strip S passing between the rolls 2 and 3 in an elongated vertical loop over the roll 5 during which travel the strip is heated until the tin or coating material disposed thereon reaches its melting point. The vertical loop of the strip, as it travels along, is enclosed preferably in an insulated substantially U-shaped muffle 6 having an entrance leg 7 and a discharge leg 8 which legs extend toward the inner peripheries of the respective conductor rolls 2 and 3, and enclosing the strip to points adjacent the latter. As the strip passes through the muffle 6, the heat applied thereto by means of electrical resistance is designed to bring the tin or coated material on the strip to its melting point in a zone indicated at M adjacent the lower end of the discharge leg 8 of the muffle 6. Directly below the lower end of the discharge leg 8, and into which the same extends, there is arranged a tank 9 containing a quenching medium and in which the conductor roll 3 is disposed. The strip passes from the muffle 6 into and through the quenching medium in the tank 9 from which the strip passes to subsequent processing steps.

According to the present invention, there is arranged in one side of the discharge leg 8 adjacent the lower end thereof on the inner side of the strip S above the roll 3, and within the quenching tank 9, means for introducing a fluid under pressure thereinto directly into the path of the strip through the lower end of the discharge leg 8, for the purpose of circulating the quenching medium disposed therein. It will be understood that the lower end of the discharge leg 8 is disposed in the quenching medium in the tank 9. The means for introducing a fluid under pressure consists preferably of a pair of nozzles 10 which are connected preferably to a pair of pipe lines 12 extending through the side wall of the tank 9 and connected to a pump or any other suitable source of supply (not shown). It is preferable that this fluid directed thereinto be the quenching medium itself which is usually water, and the lines 12 would then constitute the inlet supply for the tank 9. In such case, there is arranged adjacent the bottom of the tank 9, a discharge line 13 which likewise is connected to the pump or other source of discharge for conveying any excess quenching medium from the tank.

If desired, there is suitably arranged on the inner wall of the discharge leg 8 along the inner side of the strip S at a point above the roll 3 and directly below the path of the fluid pressure or the nozzles 10, an inclined trough member 14 which extends substantially the full width of the lower end of the discharge leg 8. The trough-like member 14 is preferably made of fiber, Micarta or some other suitable insulating material.

The improved apparatus of my invention functions in the following manner. As the strip S passes through the muffle 6 and down through the melting zone M in the lower end of the discharge leg 8, it will be understood that the tin or coating is heated to its melting point. After the tin or coating is melted, the strip passes directly into the quenching medium in the tank 9 so as to immediately quench the melted tin or coating on the surface of the strip. As the strip passes into the quenching medium in the lower end of the discharge leg 8, small globules of tin or coating material and pieces of scale will drop

from the tin or coated surface of the strip material. To prevent these small globules and pieces of scale from dropping between the conductor roll 3 and the strip S, the fluid or quenching medium under pressure introduced through the pipe 12 and the nozzles 10 into the lower end of the discharge leg 8 across the path of the strip S and circulates the quenching medium in the vicinity thereof. Such circulation of the quenching medium will tend to carry any excess tin or coating material and scale from around the strip to a point at the side of the discharge leg 8, and the tank 9, at one end of the roll 3, or the same will fall into the trough-like member 14, and, it will be carried to the lower end of the trough member and drop therefrom to the bottom of the tank, as shown in Figure 2 of the drawings. It will be seen then that the tin or other coating material disposed in the bottom of the quenching tank 9 may be easily recovered therefrom.

It is preferable that there be arranged in the tank 9 at the inner end of the discharge line 13, a filter or screen (not shown) so as to prevent the small particles of tin or coating material from passing from the bottom of the tank through the discharge line. Such is especially advisable if a pump is used to recirculate the quenching medium and to which the inlet lines 12 and the discharge line 13 are connected, so as to prevent recirculating of the small tin or coating particles which otherwise would be carried through the pump and back into the tank by the recirculating current.

In certain cases, it may be desirable to provide a rubber contact roll 15, which is arranged on the outer side of the strip S, directly opposite the conductor roll 3 so as to maintain the strip at all times in contact with the conductor roll 3 as the strip passes therearound. If such a roll is provided, it may be desirable to prevent any excess tin or coating material and scale from dropping between the outer side of the strip S and the contact roll. In such case it is preferable that additional fluid pressure means be introduced into the lower end of the discharge leg 8 on the outer side of the strip directly opposite the first mentioned fluid pressure means. Such a fluid pressure means would consist, as before, preferably of a pair of inlet lines 16 extending through the side of the tank 9 having nozzles arranged on the ends thereof for discharging the fluid or quenching medium under pressure to the space on the outer side of the strip. If desired, there is likewise provided a trough member 17 similar to the trough member 14, which is positioned directly below the path of the fluid or the quenching medium directed from the lines 16 into the tank. As before, the fluid pressure or quenching medium introduced into the tank 9 through the line 16 circulates the quenching medium on the outer side of the strip S, and tends to carry any excess tin or coating material and scale to the side of the discharge leg 8 and the tank 9 where it drops to the bottom of the quenching tank thereby preventing such tin or coating material and scale from dropping to a point between the outer side of the strip and the contact roll 15.

While I have shown and described one specific embodiment of my invention, it will be understood that this embodiment is merely for the purpose of illustration and description and that various other forms may be devised within the scope of my invention, as defined in the appended claims.

I claim:

1. In combination with apparatus for coating electrolytically continuous length strip material, means for melting the coating thereon so as to obtain a smooth, high-luster finish, a tank having a quenching medium disposed therein into and through which the strip passes immediately after it is delivered from the melting means, a horizontally disposed rotatable roll arranged in said tank and around which said strip passes, said strip being delivered from said melting unit to said roll at an angle to the horizontal, means for introducing the quenching fluid under pressure into the quenching tank in substantially a horizontal plane substantially into the path of the strip on the inner side thereof at a point above said roll, and an inclined trough member arranged in said quenching tank above said roll adjacent the inner side of the strip and below the path of the fluid directed thereinto, said fluid circulating the quenching medium in the vicinity of the strip so that any excess coating material or scale is forced from the space between the strip and said roll and caused to drop either into said trough member or into the bottom of said tank.

2. In combination with apparatus for tin coating electrolytically continuous length strip steel, means through which the strip is adapted to pass in substantially a vertical plane for melting the tin coating thereon so as to obtain a smooth, high-luster finish, a tank having a quenching medium disposed therein into and through which the strip passes substantially vertically from said melting means, a horizontally disposed rotatable roll arranged in said tank around which the strip passes, means for introducing the quenching medium under pressure into said tank in substantially a horizontal plane substantially in the path of the strip on the inner side thereof as the same enters the tank at a point above said roll, and a trough member arranged in said quenching medium above said roll adjacent the inner side of the strip and below the point of introduction of the quenching medium into said tank, said quenching medium from said introducing means circulating the quenching medium in said tank in the vicinity of the strip so that any excess tin or scale is forced from the space between the strip and the roll and caused to drop either into said trough member or into the bottom of said tank.

3. In combination with apparatus for tin coating electrolytically continuous length strip steel, means through which the strip passes in substantially a vertical plane for melting the tin coating thereon so as to obtain a smooth, high-luster finish, a tank having a quenching medium disposed therein into and through which the strip passes immediately after it is delivered from said melting means in substantially a vertical plane, said melting means including a horizontally disposed conductor roll arranged in said tank around which the strip passes, a contact roll arranged in said tank diametrically opposite said conductor roll and with which it forms a path through which the strip passes in contact with both rolls, means for introducing the quenching medium under pressure into said tank in substantially a horizontal plane substantially in the path of the strip on both the outer and inner sides thereof as the same enters the tank at a point above said rolls, and a trough member arranged in said quenching medium to either side of the strip and adjacent thereto, each of said trough members positioned above said rolls and below the point of introduction of the quenching medium into said tank, said quenching medium as it is delivered into said tank circulating the quenching medium in the vicinity of the strip so that any excess tin or scale is forced from the space between the strip and each of said rolls and caused to drop either into said trough members or into the bottom of said tank.

KLAUS EGGE.

REFERENCES CITED

The following references are of record in the file of this patent:

UNITED STATES PATENTS

Number	Name	Date
1,717,460	Mascuch	June 18, 1929
2,141,382	Ferm	Dec. 27, 1938
2,192,303	Ferm	Mar. 5, 1940
1,860,065	Willard	May 24, 1932
1,937,420	Wood	Nov. 28, 1933
482,879	Purdy	Sept. 20, 1892
1,517,910	Kirschner	Dec. 2, 1924

OTHER REFERENCES

Erbe, "Electrolytic Tin-Plating Lines and Reflowing Methods," page 3, reprint from November, 1942, issue of Westinghouse Engineer. (Reprint in Division 56, 204–28.)