Nov. 19, 1946. A. B. DOW 2,411,368

DISPLAY FOLDER

Filed Oct. 21, 1942

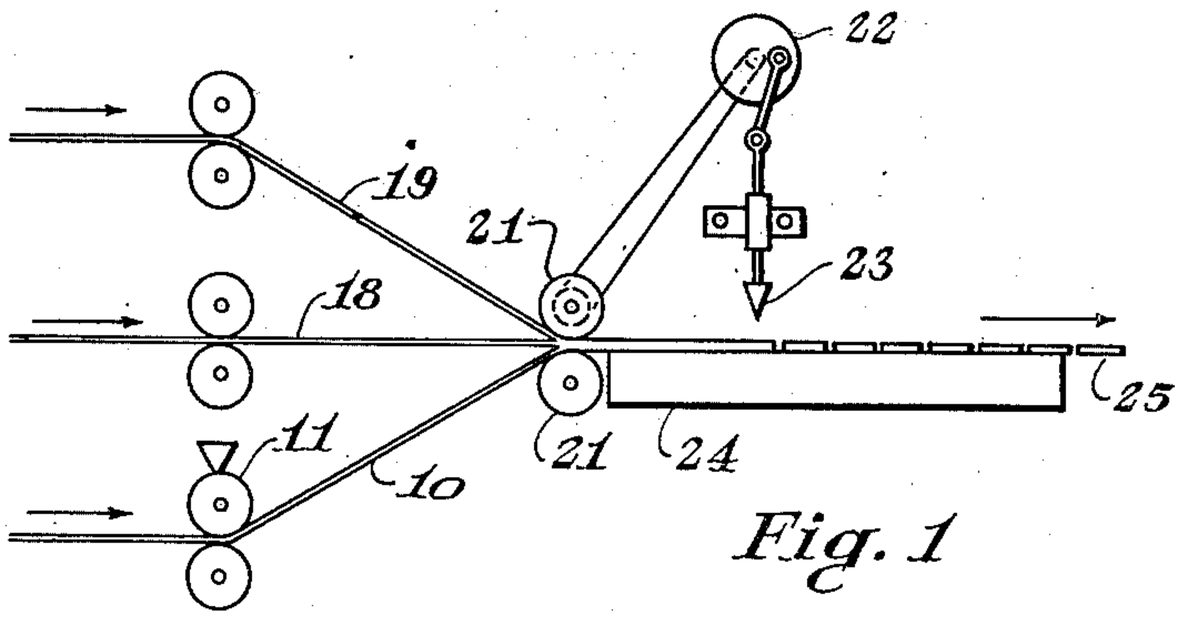

Fig. 1

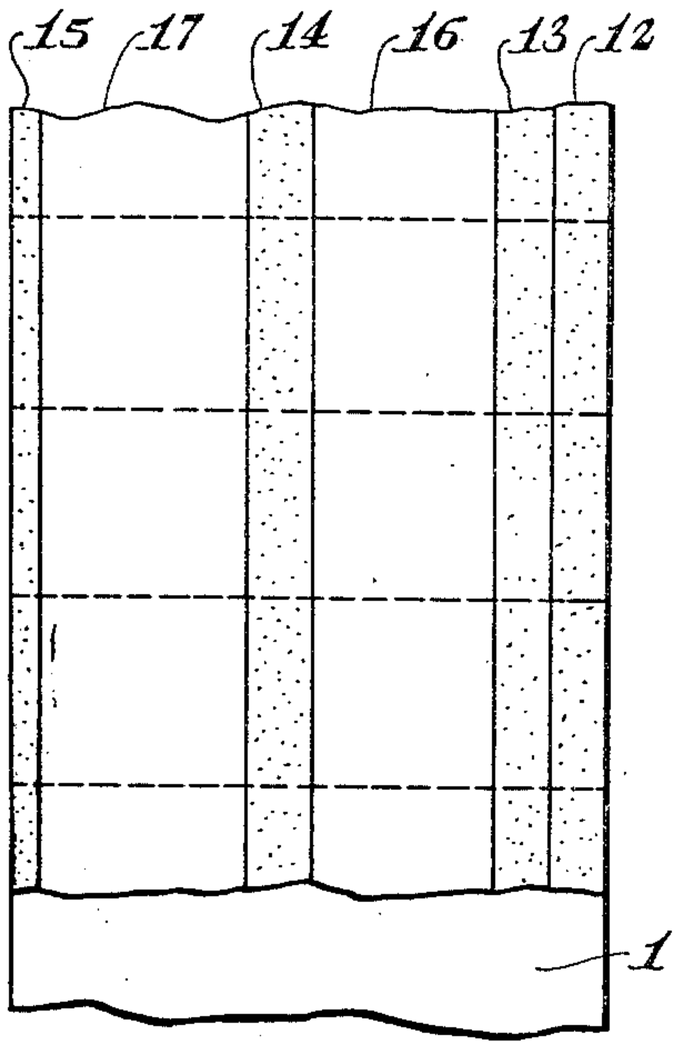

Fig. 2

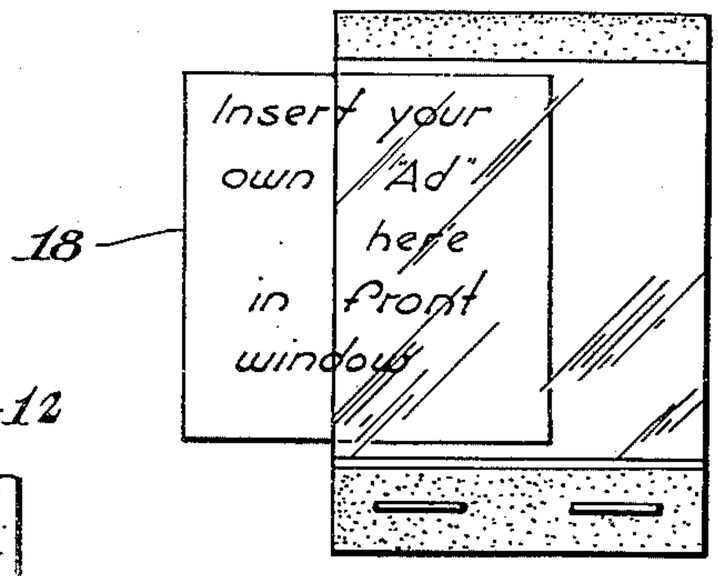

Fig. 5

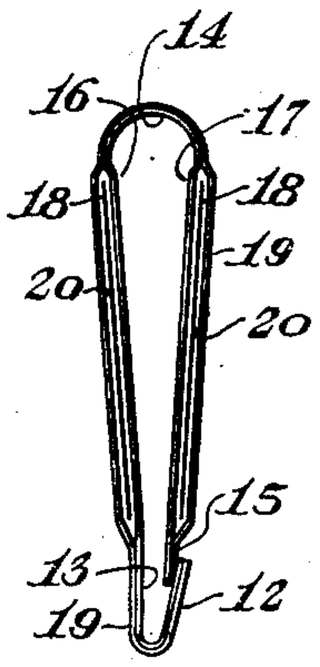

Fig. 4

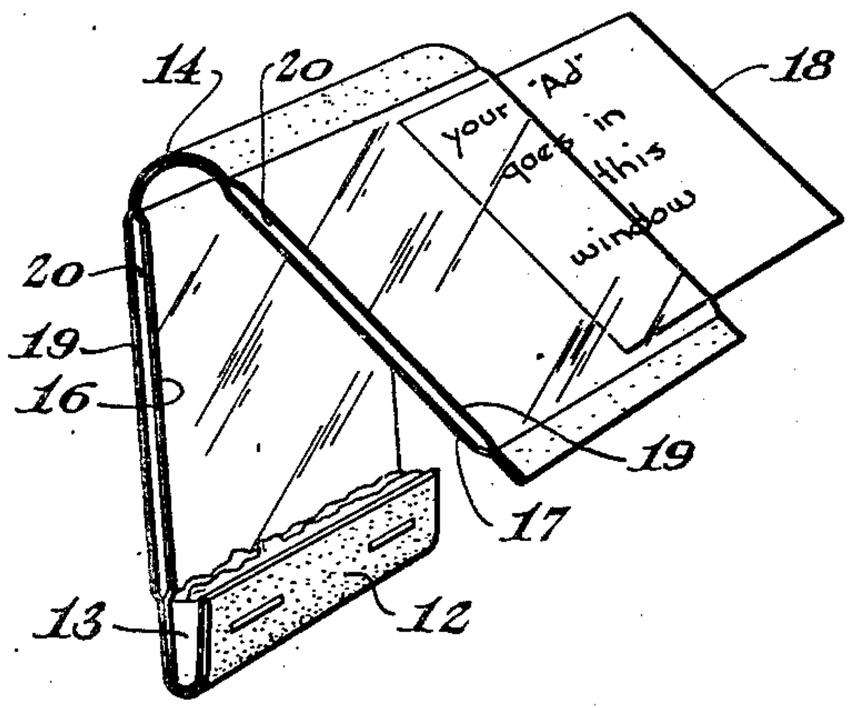

Fig. 3

INVENTOR
ALDEN B. DOW

BY
Dean Lawrence

ATTORNEY

Patented Nov. 19, 1946

2,411,368

UNITED STATES PATENT OFFICE

2,411,368

DISPLAY FOLDER

Alden B. Dow, Midland, Mich.

Application October 21, 1942, Serial No. 462,869

1 Claim. (Cl. 206—29)

1

This invention relates to a display folder, and particularly to a folder of the book-match type, having recesses therein for display purposes.

The common paper "book-match" is a well-known article of commerce, being used widely as an advertising medium. The manufacturer of such folders must constantly be interrupting his production to change type and plates as each small order is filled. Such procedure, heretofore unavoidable, has many disadvantages, and a match folder of universal adaptability is much to be desired. Such a folder would lend itself readily to the continuous and relatively uninterrupted production of these commonly used items, and would result in lowered production costs.

There has been a long-felt need for a novel type of match book which is of attractive appearance and yet which is adapted to be employed, without change at the factory, to advertise the business of any purchaser of such items by use of advertising or display copy of his own, which copy may be varied at will.

Among the objects of the present invention is to provide a display folder of the type aforesaid, having the novel features and advantages above outlined as long having been desired. Another object is to provide a display folder of the said type which has, at least as the outer cover thereof, a transparent member forming a recess or pocket into which any suitable or desired display matter of a printed or pictorial nature may be slipped, either at the factory, or by the first purchaser or subsequent possessors of the item. Yet another object is to provide a continuous method whereby such an item may be manufactured, substantially without interruption, whether or not the advertising or display matter is to be applied during the manufacture thereof. Other and related objects will become apparent from the following description and accompanying drawing.

To the accomplishment of the foregoing and related ends, the invention, then, consists of the article and method hereinafter fully described and particularly pointed out in the claim, the accompanying drawing and the following detailed description setting forth but some of the ways in which the invention may be realized.

In the said annexed drawing, forming a part of this specification, and wherein like parts are designated by like numerals in each of the several figures,

Fig. 1 is a diagrammatic representation of a layout for assembling the articles of the present invention;

2

Fig. 2 is a plan view of one of the strips being fed to the assembly machine of Fig. 1 with various functional zones marked thereon;

Fig. 3 is a view in perspective of the finished article;

Fig. 4 is a side elevation of the same article; and

Fig. 5 is a rear elevation of the same article, showing the insertion of display matter into a slot provided for that purpose.

The new article of manufacture constituting one part of the present invention is a folder of the book-match type, having a two-ply construction, at least one of the plies being of a flexible transparent material, the plies being sealed together at the insert end of the cover, along the cover fold, and at the lower, match-retaining end of the book, and being unattached to one another over their remaining contiguous areas, thus forming a front and a rear recess, or pocket into which may be slipped display or advertising matter in sheet or card form, as desired.

One method whereby the new books may be made comprises continuously unwinding a sheet of a width slightly greater than the intended extended length of an individual book; applying an adhesive stripwise adjacent each edge and slightly offset from the center of said sheet; bringing down onto the so-coated sheet another sheet, ordinarily about 3/8 inch narrower than the first said sheet, and being of a flexible and transparent material; positioning the second sheet on the first so as to leave exposed about 3/8 inch of the first, adhesive-treated sheet; and pressing the two sheets together to form three seals therebetween along the adhesive-treated strips. If desired, one or two strips of printed or decorative material may be fed between the first and the second described sheets, indexed to the edges thereof so as to fall between and not lie on the adhesive strips on the first said sheet. The two or three ply article so formed is then cut transversely at intervals of convenient size to form individual book-match blanks. There is ordinarily applied to the un-covered edge of the first, adhesive-treated sheet, a suitable ignition abrasive for match-striking purposes before the continuous sheets are cut into individual book sizes. The article is then fold-scored and matches are inserted in the usual manner, and stapled in place. The finished article, whether or not display inserts have been provided during its manufacture, is of attractive appearance, and, because of the surface characteristics of the available transparent flexible sheet materials, is

pleasing to the touch. The front and rear of the book each have window pockets into which cards, pictures, or like display matter of suitable size may be inserted if the printed strips, above mentioned, have not been inserted continuously during manufacture.

The process and article will now be described with reference to the drawing.

A sheet 10, which may be of paper, metal foil, or of transparent or opaque, flexible, non-fibrous sheet material, is continuously unwound from a supply, not shown, and is conveyed by conventional rollers, diagrammatically represented. On the said sheet, continuous strips of adhesive are applied, as by means of a suitably profiled striping roller 11 which may receive adhesive from the indicated hopper. The adhesive is applied to cover three strip-form areas 13, 14, and 15, and may, as well, be applied to area 12 which, in conventional construction, is to receive the abrasive ignition material for match striking. A sheet 19 of flexible transparent sheet material is concurrently fed at the same rate to meet the adhesive treated sheet 10, suitably between rollers 21, where pressure is exerted to seal transparent sheet 19 to sheet 10 along the three adhesive treated strips of the latter. At a suitable time in the operation, the abrasive ignition material may be applied in known manner, and the two-ply sheet may be cut transversely at regular intervals, as by a knife 23, which may be cam actuated, and geared to roller 21. The so-formed blanks 25 may then be fold-scored and fitted with matches in the usual manner. It is to be understood that the apparatus illustrated is purely diagrammatic, and that many machines for accomplishing the purpose may readily be devised.

The operation just described produces an article having two pockets 20, formed between the sheets 10 and 19 and of widths coextensive with those of the uncoated areas 16 and 17 on sheet 10. Individual slips 18 of proper size may be inserted into pockets 20, if desired, after the individual books have been finished.

In a modification of the method described, one or a pair of insert strips 18, bearing printing, pictures, or like indicia, may be fed between sheets 10 and 19, indexed with respect thereto so as to overlie only one or both of the areas 16 and 17 on sheet 10 which were uncoated with adhesive. In such an operation, the knife-controlling means is chosen so as to cut the blanks 25 between the regularly repeated indicia on inserts 18. The flexible non-fibrous sheet material which may constitute sheet 10, and which, in transparent form is employed as sheet 19, may be any of the available sheets conforming to that definition. Thus, it may be of ethyl cellulose, cellulose acetate, or other cellulose ether or ester, or it may be of a polymeric material having the required flexibility and transparency, such as the vinyl chloride-vinyl acetate copolymer designated commercially as "Vinylite." The sheets employed should be chosen of a thickness to provide the desired rigidity to the finished article and yet should be capable of being flexed without cracking. Regenerated cellulose sheets may be used, but are commonly available only in too thin foils to produce the best results. The transparent sheet 19 need not be colorless, but may be tinted or dyed, and may itself bear printed matter to produce offset effects with the indicia on insert 18, if desired.

Sheet 10 may be printed on its inner or outer surface, as are the customary paper match books. Any printing on that portion of its outer surface represented by areas 16 and 17 will be concealed by inserts 18 unless the latter also are transparent.

When sheet 10, sheet 19 and insert 18 are all printed, and when at least sheet 19 and insert 18 are transparent, remarkable offset effects may be produced, or impressions of depth can be obtained in composite pictures, creating a striking appearance in the finished article.

It has been suggested that the abrasive ignition strip be applied along the area 12 of sheet 10, in the customary position for such a strip, but it may, of course, be applied along the edge of area 15 or on a convenient exposed or accessible portion of sheet 19.

It is to be understood, of course, that the book-folder, described as a match folder, need not be so employed, and that any article of suitable dimensions, other than matches, may be inclosed in the book, if desired. Thus, without change in the structure described, the book may be used to hold yarn samples, papers of needles, lens tissues, facial tissues, memo sheets, or any of numerous other small items.

I therefore particularly point out and distinctly claim as my invention:

A folder of the book-match type comprising two superposed continuous strips folded transversely adjacent the center thereof to form a back member and a cover member, the free end of the cover being the insert end and the free end of the back member being folded back upon itself to form a bottom return fold which receives the insert end, at least one of said strips being of flexible transparent material, the strips being sealed together adjacent the insert end of the cover, along the center fold and adjacent the bottom return fold, and being unattached over the remaining contiguous areas, the last said areas presenting a laterally open, transparent pocket on each the front and rear faces of the article in its normal folded form and said article having secured within the bottom return fold a row of tipped matches and bearing on an outer surface of the folder an area coated with abrasive ignition material for the matches.

ALDEN B. DOW.