Dec. 25, 1945. A. J. WEBER ET AL 2,391,663

STEAM SPOTTING UNIT

Filed Dec. 13, 1943 2 Sheets-Sheet 1

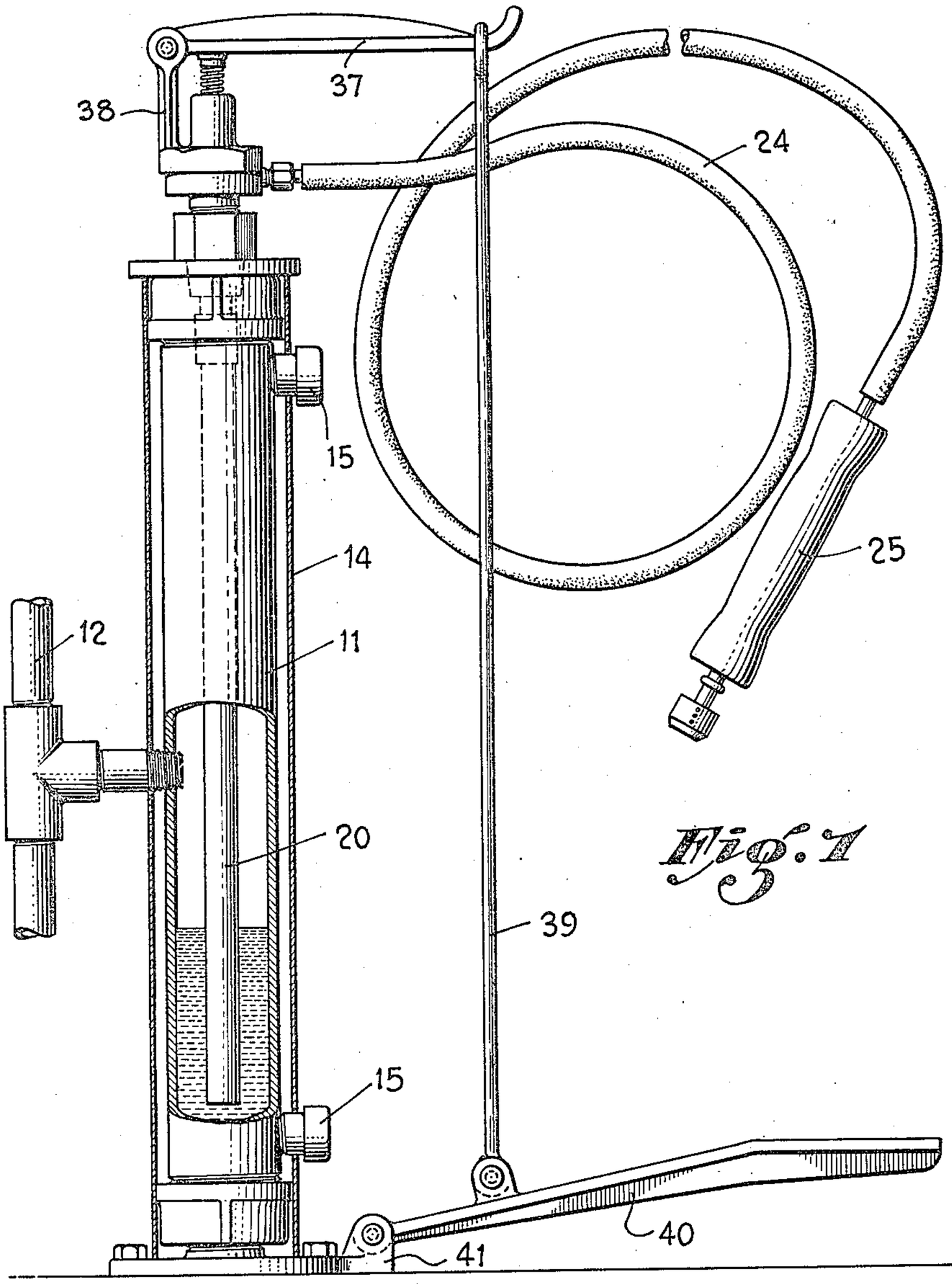

Fig. 7

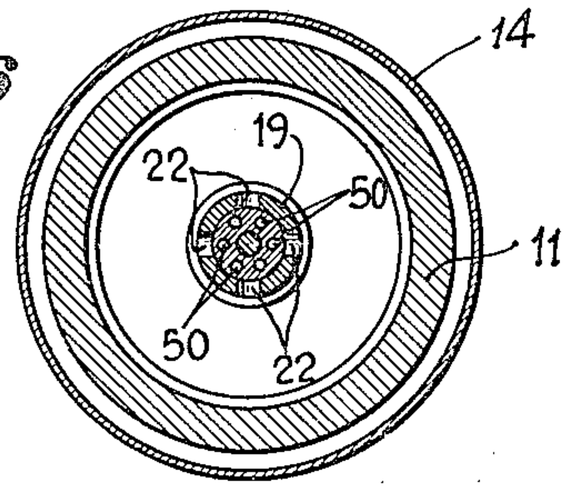

Fig. 6

ALBERT J. WEBER and
ERNEST L. CHRISMAN,
Inventors;

By

Attorney.

Dec. 25, 1945. A. J. WEBER ET AL 2,391,663

STEAM SPOTTING UNIT

Filed Dec. 13, 1943 2 Sheets-Sheet 2

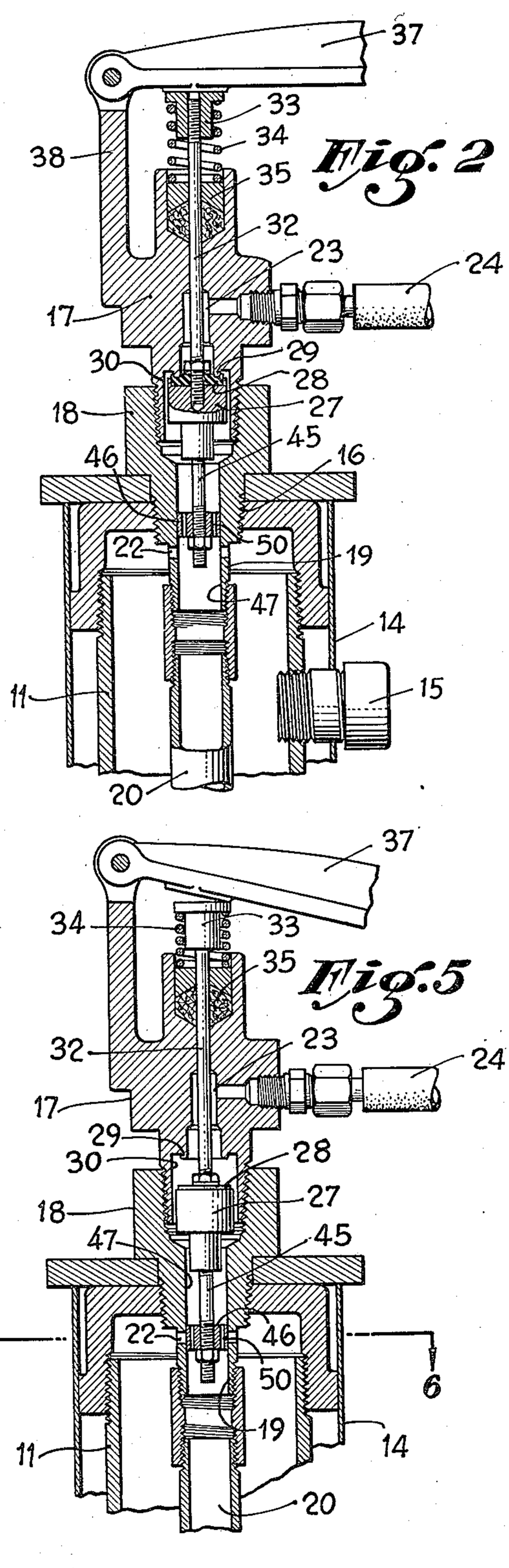

Fig. 2

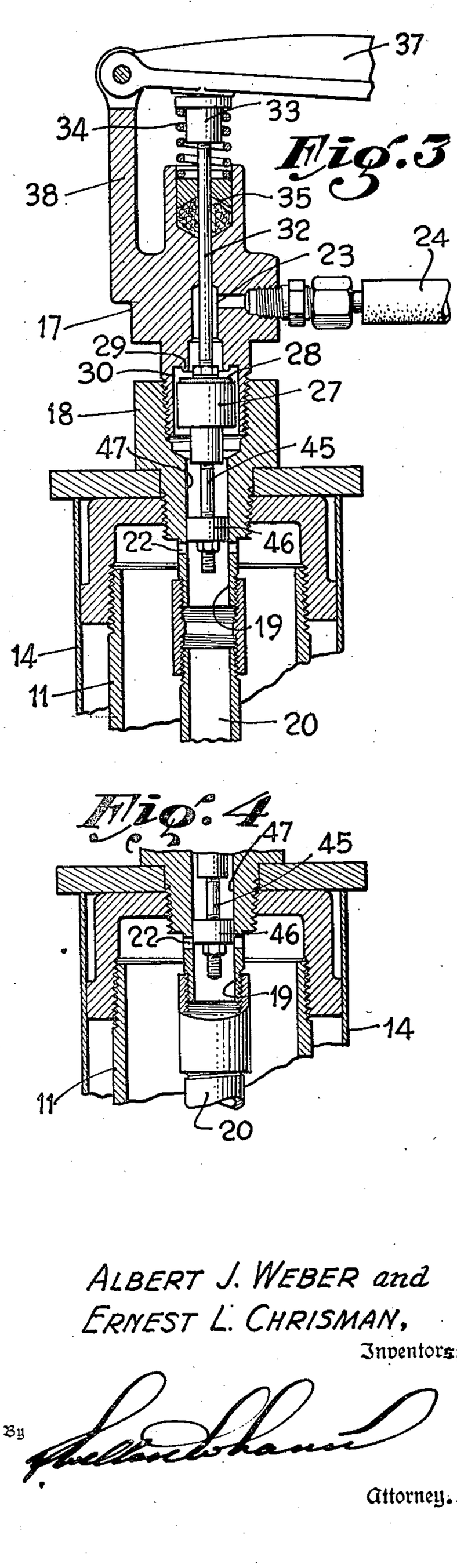

Fig. 3

Fig. 5

Fig. 4

ALBERT J. WEBER and
ERNEST L. CHRISMAN,
Inventors;

By

Attorney.

Patented Dec. 25, 1945

2,391,663

UNITED STATES PATENT OFFICE

2,391,663

STEAM SPOTTING UNIT

Albert J. Weber and Ernest L. Chrisman,
Los Angeles, Calif.

Application December 13, 1943, Serial No. 514,084

4 Claims. (Cl. 299—84)

Our invention relates to apparatus for supplying steam of varying degrees of dryness or wetness for use in steam spotting apparatus useful to tailors and cleaners for removing spots from fabrics. Our invention, however, is not limited to this particular use, and there are other uses and adaptations within the scope of the invention as defined in the appended claims.

One object of our invention is to provide apparatus under the control of the operator capable of producing dry or wet steam as desired for use in cleaning fabrics and in which the degree of wetness may be varied at will and as required by the operator.

Another object of our invention is to provide apparatus of the general character referred to above which is of a simple, sturdy, and economical construction employing but a single outlet, a single valve, and a single proportioning means whereby the amount of water added to the steam to determine its wetness may be determined by the operator.

It is also an object of our invention to provide apparatus of the character referred to in which there is a proportioning means which determines the amount of water which is added to the steam in order to control its wetness, this proportioning means being directly associated with the closure valve for the steam and water chamber of the device and movable therewith simultaneously with the movement of the outlet valve, which outlet valve is under the control of the operator.

It is another object of our invention to provide an apparatus for supplying dry or wet steam for treating or cleaning fabrics in which there is a proportioning means which is so positioned that when the closure valve for the steam and water containing chamber is first opened steam is allowed to pass through the outlet, and in which further opening movement of the valve causes the steam to be throttled which develops pressure and causes water to be forced into the outlet so that it will mix with the steam, thus producing steam of the desired wetness.

Other objects and advantages of our invention will be brought out during the course of the following detailed description of one form of our invention which has proven to be quite satisfactory for its intended use.

Referring to the drawings in detail,

Fig. 1 is an elevational view partly in section showing a device incorporating the features of our invention.

Fig. 2 is an enlarged fragmentary sectional view showing the valve and proportioning means of our invention with the valve in closed position.

Fig. 3 is a similar view showing the valve open but showing steam being supplied to the outlet.

Fig. 4 is a fragmentary sectional view showing the structure with the proportioning means in such a position that the steam is being throttled and an amount of water, as well as steam, is being delivered to the outlet.

Fig. 5 is a view corresponding to the other views but showing the steam completely shut off and only water being supplied to the outlet.

Fig. 6 is a sectional view taken on the line 6—6 of Fig. 5.

Referring to the drawings and particularly Fig. 1, there is a chamber 11 containing steam in its upper end and water at its lower end, the steam being supplied by a steam admission means such as a pipe 12. The water is preferably formed by the steam condensing in the chamber 11. For insulation purposes, we provide a shell 14 and in addition to this the necessary drainage and cleaning outlets, such as indicated at 15, are provided.

Referring to Figs. 2 to 6, the upper end of the chamber 11 has a threaded opening 16 which threadedly supports a housing comprising an upper piece 17 and a lower piece 18 threadedly secured together. The lower end of the lower piece extends downwardly into the chamber 11 in the form of a nipple 19 and has a downwardly extending pipe 20 secured thereto which extends to the part of the chamber containing the water and constitutes a water supply passage. Steam supply passage or passages 22 are formed in the nipple 19 which communicate with the upper part of the chamber 11 which contains the steam. In this manner both the steam part and the water part of the chamber are connected to the outlet 23. This outlet 23 is in communication with the flexible hose 24, on the end of which a spotting device 25 is attached.

For the purpose of closing the outlet 23, we provide a valve including a body 27 and a valve disc 28 adapted to engage a valve seat 29 provided in the upper end of the enlargement 30 of the outlet which comprises a valve chamber. Extending upwardly from the valve is a valve rod 32, the upper end of which is provided with a nut spring retainer 33 which compresses a spring 34 against a stuffing box assembly 35, thus accomplishing two things: first, a yieldable retention of the valve in closed position; and, second, a yieldable application of pressure to the stuffing box assembly, thus forming a fluid-tight seal.

For operating the valve, we provide an operating lever **37** which is pivoted on a pivot support arm **38** and extends horizontally above the nut **33** and is engaged at its free end by a depending link **39** operatively connected to a foot pedal **40**. The foot pedal **40** is pivoted to a base **41** of the apparatus and is in a convenient position to be actuated by the foot of the operator.

We prefer to provide a proportioning device that is connected to the valve to move in unison therewith. In the present instance, from the valve body **27** is a stem **45** which has a proportioning means or a proportioning device at its lower end. This proportioning device is provided in the form of a piston element **46** mounted on the stem **45**, which has a slidable contact with a cylinder bore **47** provided by the nipple **19** of the lower housing piece **18**. This cylindrical bore **47** may be considered as constituting a part of the outlet. The water supply passage is at all times connected to the outlet above the proportioning means **46**, and this communication is conveniently provided for by axial openings **50** formed through the piston element **46**.

As shown in Fig. 2, when the valve closes the outlet the proportioning means is positioned above the steam supply passages **22**, and therefore at this time both ends of the chamber **11** are in communication with the outlet and the water supply passage will be filled with steam down to the water level in the chamber.

The operation of our device is briefly explained as follows. When the operator is in need of steam, he may need dry steam or wet steam, or in instances he may require hot water. This, of course, depends upon the fabric which he is cleaning or spotting and the nature of the substance which must be removed. When the operator is in need of steam or water, he depresses the pedal **40** which opens the valve and moves the parts into the position shown in Fig. 3. At this time the valve is open and the steam supply passages **22** are also open. Therefore, steam will pass through the openings **50** in the piston **46** and through the outlet **23**, the hose **24**, and the spotting device **25**. Dry steam therefore is supplied to the spotting device. Should the operator desire steam of more wetness, all he has to do is to depress the pedal **40** a greater distance so that the piston **46** will move into a position as shown in Fig. 4 where the steam supply passages are partly closed. This throttles the steam supply passages, cutting down the flow of steam, building up the necessary pressure against the water in the lower end of the chamber, and causing water to flow upward through the water supply passage formed by the pipe **20** and into the outlet, the water mixing with the steam and forming steam of the desired wetness. It will be seen that the position of the proportioning means or, more specifically, the piston **46**, determines the amount of steam which will flow through the outlet. If the operator desires water exclusively, all he is required to do is to further depress the foot pedal **40** so as to move the parts into the position shown in Fig. 5 wherein the piston **46** completely closes the steam supply passages **22**, thus preventing any steam from flowing through the outlet and thus utilizing the pressure in the chamber to cause water exclusively to flow through the outlet, the hose, and to the nozzle for use.

From the foregoing description, it will be seen that our device has but a single control and therefore eliminates the necessity of operating two separate valves or control means, one for the water and the other for the steam. The different parts are set in the properly adjusted position and will remain in adjustment during the life of the device. The apparatus of our invention is a marked advantage over prior art devices having separate controls or having separate valves and by virtue of its simplicity is easy to operate, of sturdy construction, and of long life.

Although we have disclosed herein but one form of our invention, it will be obvious to those skilled in the art that various modifications and alterations may be made without departing from the spirit and scope of our invention as defined in the statement of invention and appended claims.

We claim as our invention:

1. In an apparatus for supplying dry or wet steam for treating or cleaning fabrics, the combination of: a chamber containing water at its lower part and steam at its upper part; an outlet conduit extending downwardly through said chamber to its lower part; steam supply passage means connecting said outlet conduit to the upper part of said chamber; a valve for closing said outlet conduit; an operating means for operating said valve; and steam passage throttling means so connected to said valve that after said valve has been opened and steam is flowing through said outlet conduit further movement of said valve operating means in the direction that opened the valve will cause said throttling means to close said steam supply passage means, thus causing water to flow through said outlet conduit, a partial closing of said steam supply passage means causing a mixture of steam and water to flow from said outlet conduit.

2. In an apparatus for supplying dry or wet steam for treating or cleaning fabrics, the combination of: a chamber containing water in its lower part and steam in its upper part; admission means for admitting steam to said chamber; a fluid outlet conduit for said chamber; a valve for controlling the flow of fluid through said outlet conduit; a water supply passage from the lower part of said chamber to said outlet conduit interiorly of said valve; a steam supply passage from the upper part of said chamber to said outlet conduit interiorly of said valve; and steam supply passage throttling means in said outlet conduit below said valve and so connected to said valve that after said valve is opened and steam is flowing through said outlet conduit a further opening of the valve causes said steam supply passage throttling means to throttle said steam supply passage thereby causing steam entering said admission means to accumulate in said chamber to cause water to be forced up through said water supply passage into said outlet conduit in amounts depending on the extent of throttling of said steam supply passage.

3. In an apparatus for supplying dry or wet steam for treating or cleaning fabrics, the combination of: a chamber containing water in its lower end and steam in its upper end; an outlet for said chamber; a valve for opening or closing said outlet; a tube extending from said outlet interiorly of said valve to the lower end of said chamber; a steam supply passage in the wall of said tube connecting the interior of the tube with the upper end of said chamber; operating means for operating said valve; and steam supply passage throttling means operatively connected to said valve and slidable in said tube, said throttling means having an opening therethrough for

passage of water and being so positioned that, after actuation of said valve operating means to open said valve, further movement of said valve operating means causes said throttling means to throttle said steam supply passage whereby steam pressure in the upper end of said chamber will force water upwardly through said tube to said outlet.

4. In an apparatus for supplying dry or wet steam, the combination of: a chamber containing water in one portion and steam in another communicating portion; a fluid outlet conduit; a water supply passage connecting the water portion of said chamber to said outlet conduit; a steam supply passage from the steam portion of said chamber to said outlet conduit; a valve positioned in said outlet conduit beyond the points of entry of said water and steam supply passages and arranged to control discharge of fluid from said outlet conduit; an operating means for operating said valve; and a steam supply passage throttling device so operatively connected to said valve and so arranged that after said operating means has been actuated to open said valve and steam is flowing through said outlet a further movement of said operating means in the direction which opened said valve will cause said throttling means to throttle said steam supply passage, the extent of such throttling being dependent on the extent of said further movement of said operating means.

ALBERT J. WEBER.
ERNEST L. CHRISMAN.