May 5, 1942. F. P. BOHR 2,281,663

CIGARETTE PAPER HOLDER

Original Filed June 1, 1937 2 Sheets-Sheet 1

Fig. 1.

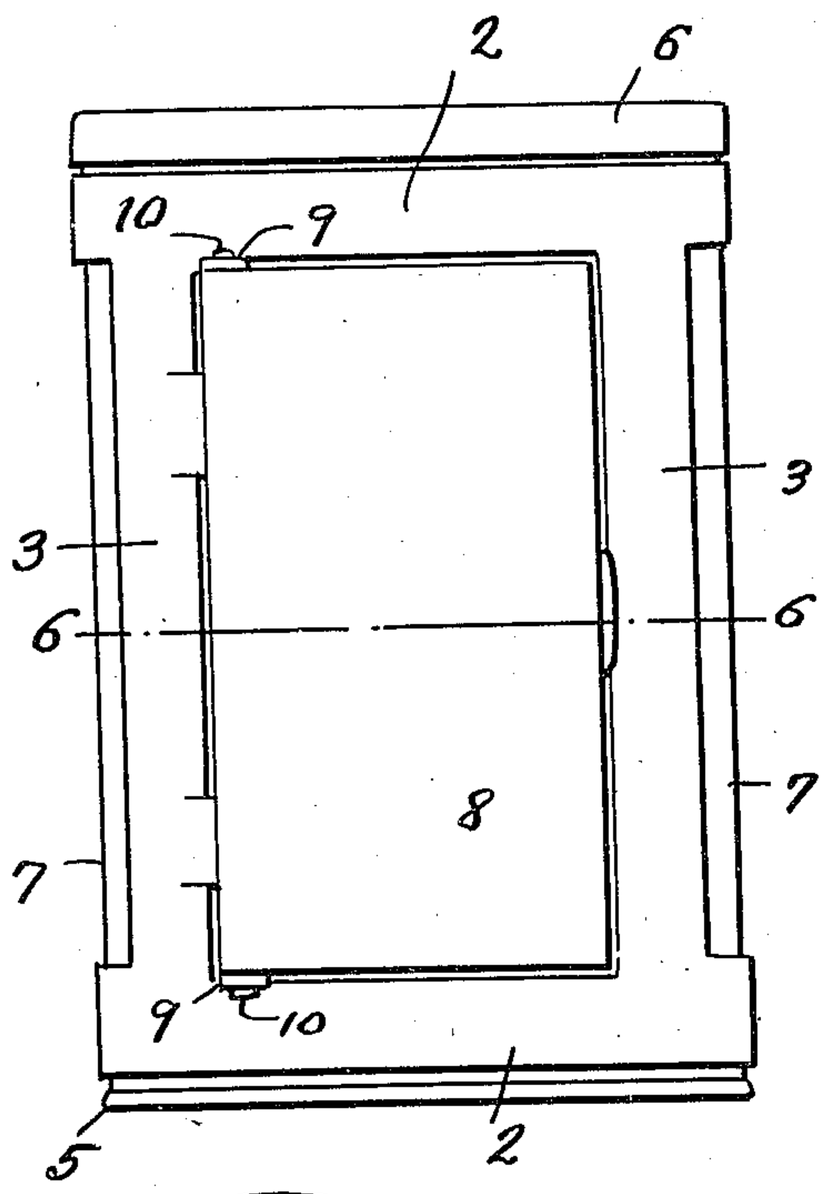

Fig. 2.

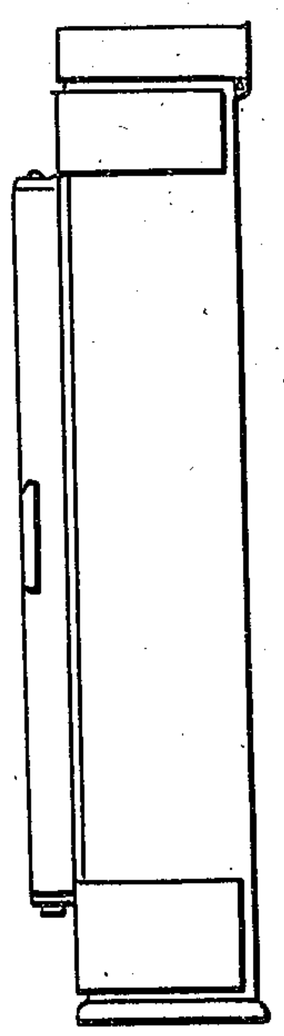

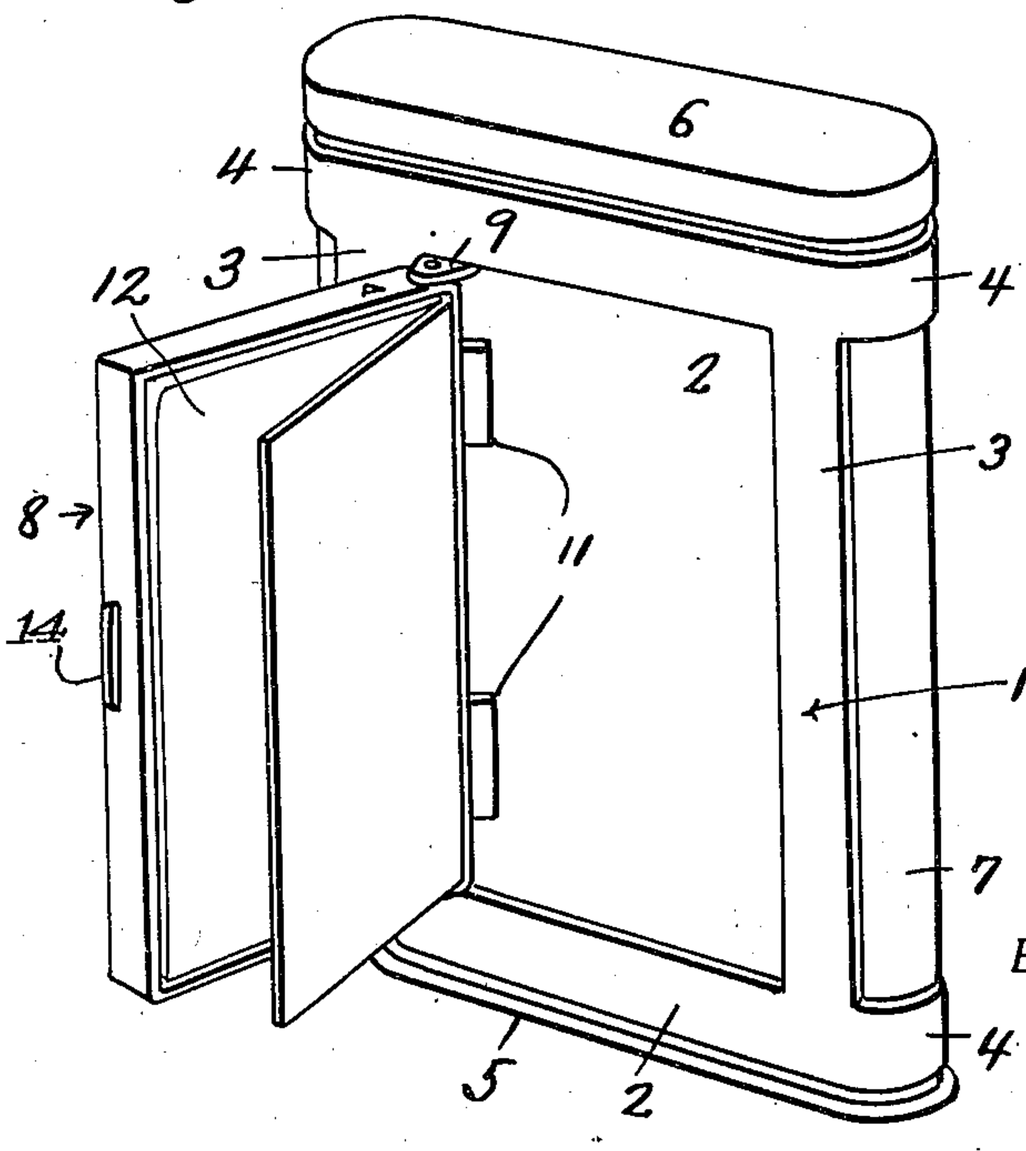

Fig. 3.

Inventor

Frank P. Bohr

By Clarence A. O'Brien

Hyman Berman

Attorneys

May 5, 1942. F. P. BOHR 2,281,663

CIGARETTE PAPER HOLDER

Original Filed June 1, 1937 2 Sheets-Sheet 2

Fig. 4.

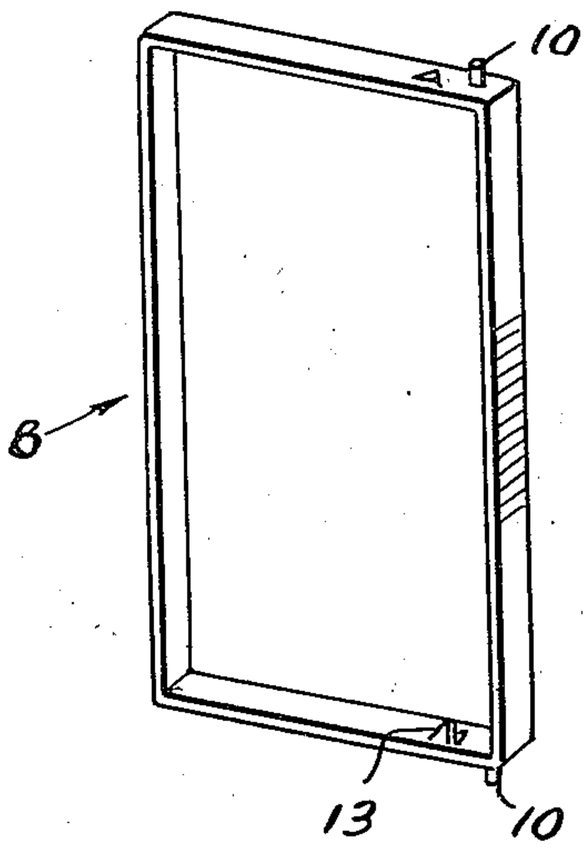

Fig. 5.

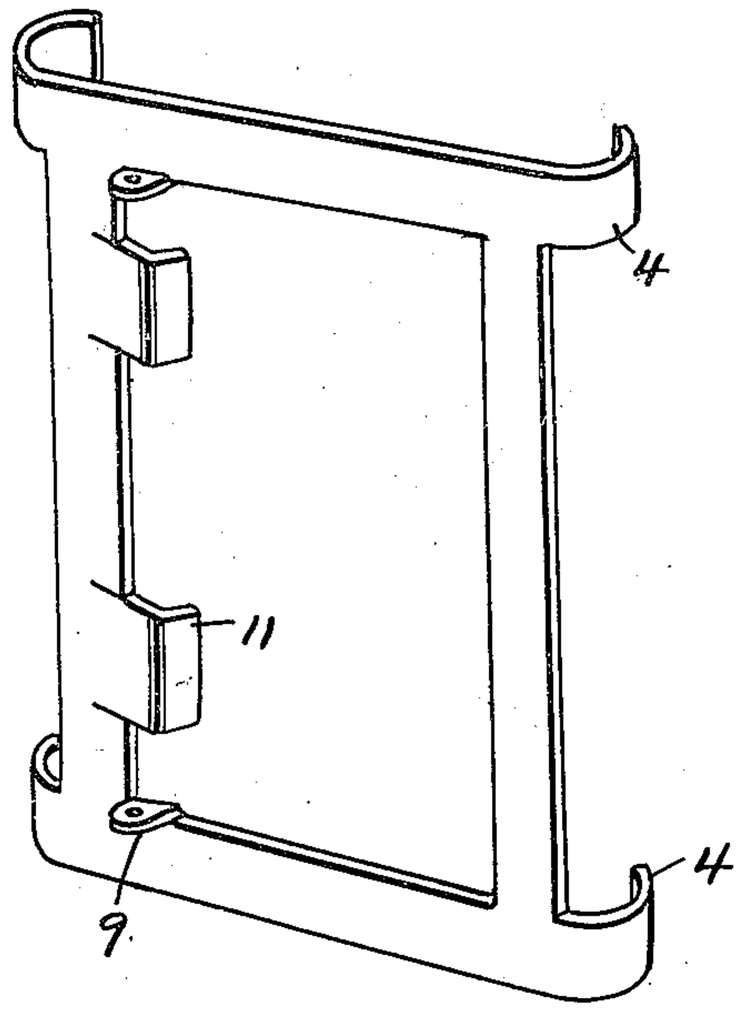

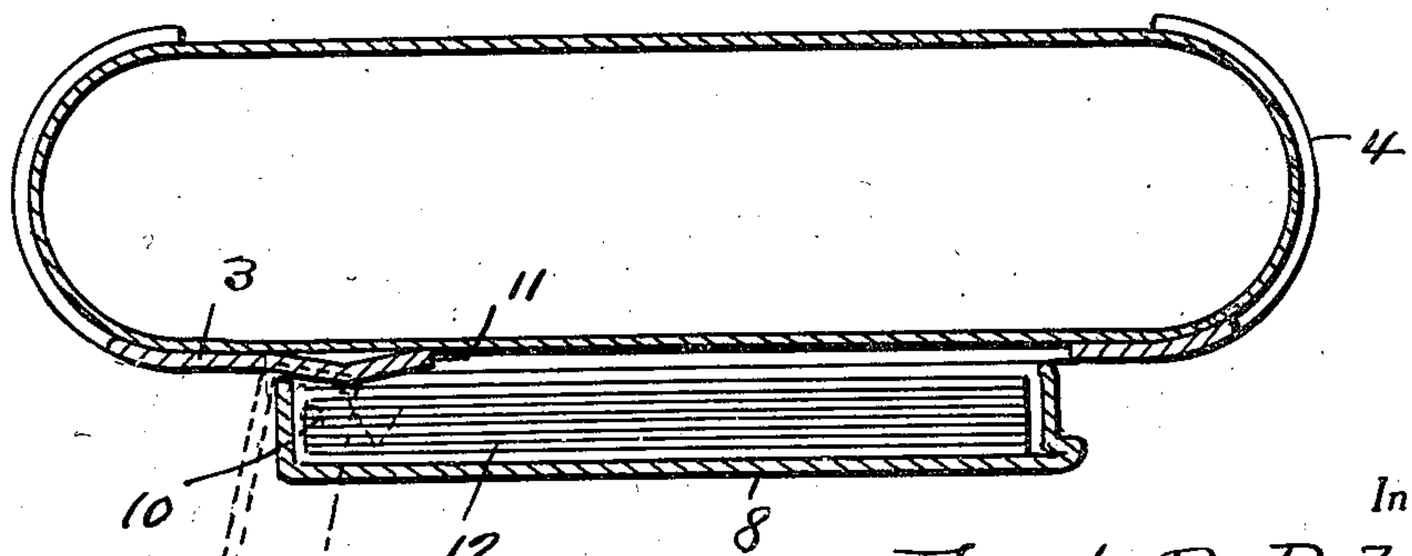

Fig. 6.

Inventor

Frank P. Bohr

By Clarence A. O'Brien
Hyman Berman

Attorneys

Patented May 5, 1942

2,281,663

UNITED STATES PATENT OFFICE

2,281,663

CIGARETTE PAPER HOLDER

Frank Philip Bohr, Chicago, Ill., assignor of one-half to Walter Bohr, Parkston, S. Dak.

Substituted for abandoned application Serial No. 145,844, June 1, 1937. This application September 8, 1941, Serial No. 410,102

4 Claims. (Cl. 206—38)

My invention relates to improvements in special receptacles for pocket and personal use and more specifically to cigarette paper holders for attachment to tobacco cans of commerce, the present application being a substitute for application Serial No. 145,844, filed June 1, 1937, and which became abandoned through failure to pay the final government fee.

The principal object is to provide an inexpensive, light-weight, practical device for holding cigarette papers and which may be quickly attached to the usual flat pocket type of tobacco can and readily removed therefrom for attachment to other cans of this type as desired.

Another object is to provide a device of the character and for the purpose above set forth adapted to fold flat against one side of the tobacco can and to be frictionally locked in folded position so as to form a compactly arranged adjunctive part of the can easily swung away from the same into opening position for access to the papers therein.

To the accomplishment of the above and subordinate objects presently appearing, a preferred embodiment of my invention has been illustrated in the accompanying drawings, set forth in detail in the following description, and defined in the claims appended hereto.

In the drawings—

Figure 1 is a view in side elevation illustrating my improved cigarette paper holder attached to the usual type of flat tobacco can or box.

Figure 2 is a view in edge elevation.

Figure 3 is a view in perspective showing the cigarette paper holder or receptacle, swung into open position.

Figure 4 is a view in perspective of the holder or receptacle.

Figure 5 is a similar view of the holder supporting frame, and

Figure 6 is a view in transverse section taken on line 6—6 of Figure 1 and drawn to an enlarged scale.

Referring to the drawings by numerals, in the illustrated embodiment thereof, my invention comprises a holder supporting frame 1, of flat, bar-like, resilient metal, including end bars 2 and side bars 3 arranged in substantially rectangular formation. The frame 1 is of the proper length to fit between the base flange 5 and the cover 6 of the usual flat sided tobacco can 7 of commerce, with the side bars 3 resting against one side of said can. The end bars 2 are extended to provide end pairs of opposed hook shaped arms 4 adapted to take over the edges of the can 7, with a snap action, and thereby clip the frame 1 to said can. The holder 8 has the form of a rectangular pan like receptacle open at one side and fitting into said frame 1. Adjacent one edge, the holder 8 is hingedly connected to the frame 1 to swing into and out of the same into open and closed positions, respectively, and has its open side opposed flat against the adjacent side of the can 7 in the closed position of said receptacle. The hinge connection in this instance comprises a pair of ears 9 bent outwardly from the inner edges of the end bars 2, respectively, adjacent to one of the side bars 3, and a pair of hinge pintles 10 extending from opposite ends of the receptacle 8, respectively, and journaled in said ears 9. The side bar 3 adjacent to the hinged edges of the receptacle 8 is provided with a pair of inwardly extending, outwardly bowed, edge lugs 11 adjacent to the end bars 2, respectively, and yieldingly bearing against the hinged edge of the receptacle 8 for co-action with said edge to hold the receptacle, frictionally in either opened or closed position. The holder 8 is of a proper size for a snug fit therein of a package of cigarette papers 12 and is provided with a pair of inwardly extending prongs 13 at the ends thereof, respectively, adjacent to the hinged edge of the holder for attaching to the end edges of the package of cigarette papers to hold the latter in the receptacle. The receptacle 8 is made of thin, light metal and formed at the free side thereof, as best shown in Figure 3, with a short bead 14 for use in swinging the holder 8 open as will be understood.

In attaching the described invention to a tobacco can, the hook shaped arms 4 are swung outwardly in degree sufficient to admit the edges of the can 7 therebetween and then released for reaction to clip around said edges with a snap action as will be apparent. The package of cigarette papers 12 is inserted in the holder 8 over the prongs 13 which hold the package in the holder against accidental displacement. The holder 8 may be swung to open or closed position, as desired, the bowed lugs 11 frictionally locking said holder in either position in a manner which will be understood.

The details and advantages of my invention will, it is believed, be clear from the foregoing without further explanation.

Manifestly the invention as described is susceptible of modification both as regards details of construction and arrangement of parts without departing from the inventive concept and the right is herein reserved to all such modifications

falling within the scope of the claims appended hereto.

Having described the invention, what is claimed as new is:

1. A device for holding cigarette papers and for attachment to a flat tobacco can comprising a substantially rectangular frame including end pairs of opposed hook shaped arms extending laterally therefrom and resilient to take over the side edges of the can with a snap action, a rectangular paper holder adapted for the fitting of a package of cigarette papers therein and to fit into said frame, the holder being hinged adjacent one edge thereof to said frame to swing into and out of the same into open and closed positions, respectively, and a resilient arm extending from said frame and bearing against said edge of the container for coaction therewith to frictionally lock the holder in open and closed positions, respectively.

2. A device for holding cigarette papers and for attachment to a flat tobacco can comprising a substantially rectangular frame including end pairs of opposed hook shaped arms extending laterally therefrom and resilient to take over the side edges of the can with a snap action, a rectangular paper holder adapted for the fitting of a package of cigarette papers therein and to fit into said frame, the holder being hinged adjacent one edge thereof to said frame to swing into and out of the same into open and closed positions, respectively, and a resilient arm extending from said frame and bearing against said edge of the container for coaction therewith to frictionally lock the holder in open and closed positions, respectively, the holder swinging flat against the adjacent side of the can in the closed position thereof and having an open side closed by said side of the can.

3. A device for holding cigarette papers and for attachment to a flat tobacco can comprising a substantially rectangular frame including end pairs of opposed hook shaped arms extending laterally therefrom and resilient to take over the side edges of the can with a snap action, a rectangular paper holder adapted for the fitting therein of a package of cigarette papers and to fit in said frame, said holder being hinged adjacent one edge thereof to said frame to swing into and out of the same into open and closed positions, respectively, a resilient arm extending from said frame and bearing against said edge of the holder for coaction therewith to frictionally lock the holder in open and closed positions, respectively, and a pair of opposed prongs extending inwardly of the holder at the top and bottom thereof, respectively, for retaining the package of cigarette papers in said holder.

4. A device for holding cigarette papers and for attachment to a flat tobacco can comprising a substantially rectangular frame including end pairs of opposed hook shaped arms extending laterally therefrom and resilient to take over the side edges of the can with a snap action, a rectangular paper holder adapted for the fitting therein of a package of cigarette papers and to fit in said frame, said holder being hinged adjacent one edge thereof to said frame to swing into and out of the same into open and closed positions, respectively, a resilient arm extending from said frame and bearing against said edge of the holder for coaction therewith to frictionally lock the holder in open and closed positions, respectively, the holder swinging flat against the adjacent side of the can in the closed position thereof and having an open side closed by said side of the can, and a pair of opposed prongs extending inwardly of the holder at the top and bottom thereof, respectively, for retaining the package of cigarette papers in the holder.

FRANK PHILIP BOHR.