Oct. 7, 1941. P. A. E. ARMSTRONG ET AL 2,258,564

STAINLESS CLAD PIERCED TUBES

Original Filed March 11, 1940

Fig. 1

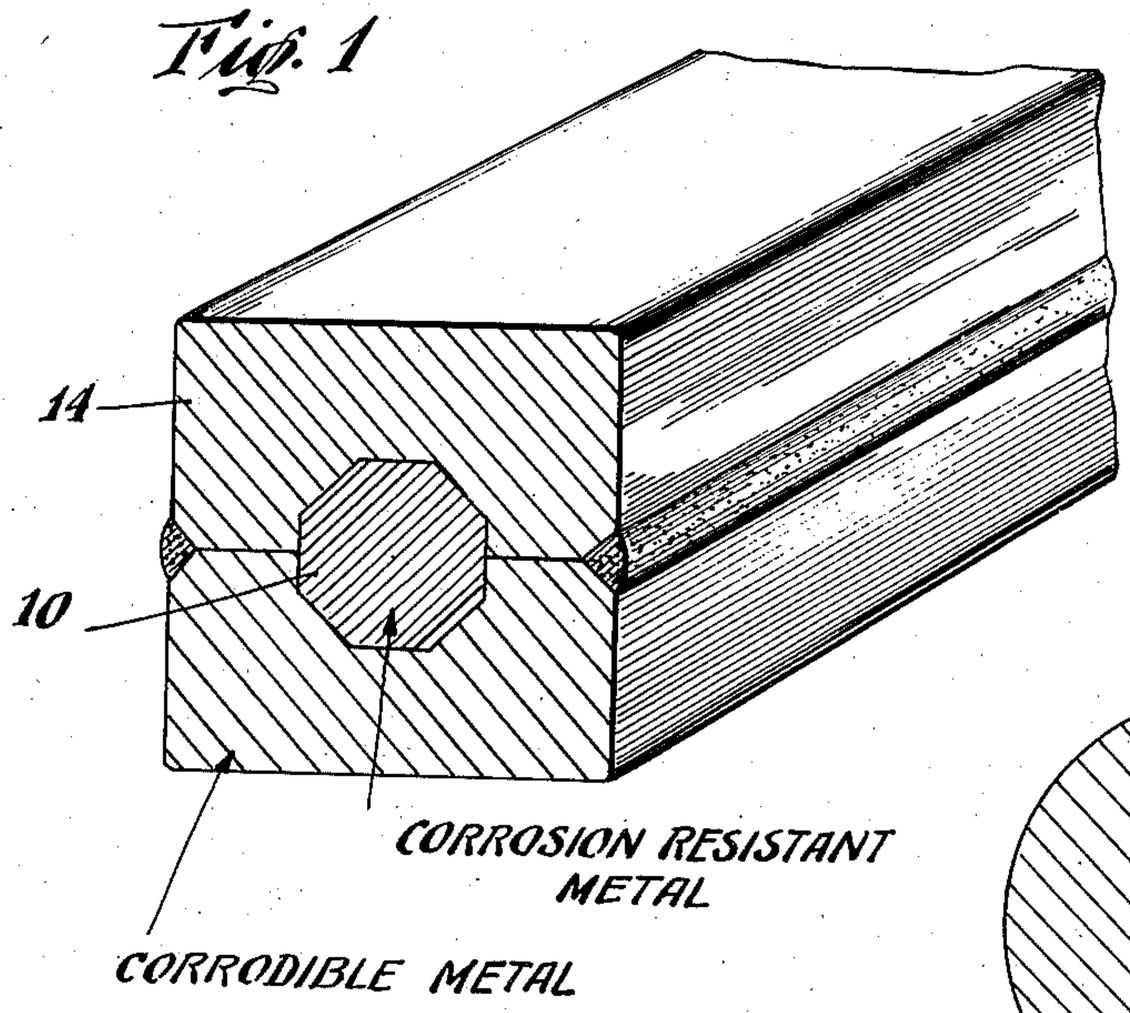

Fig. 2

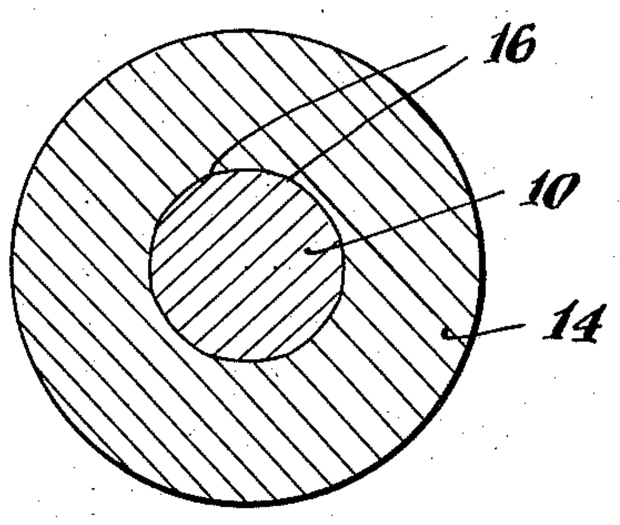

Fig. 3

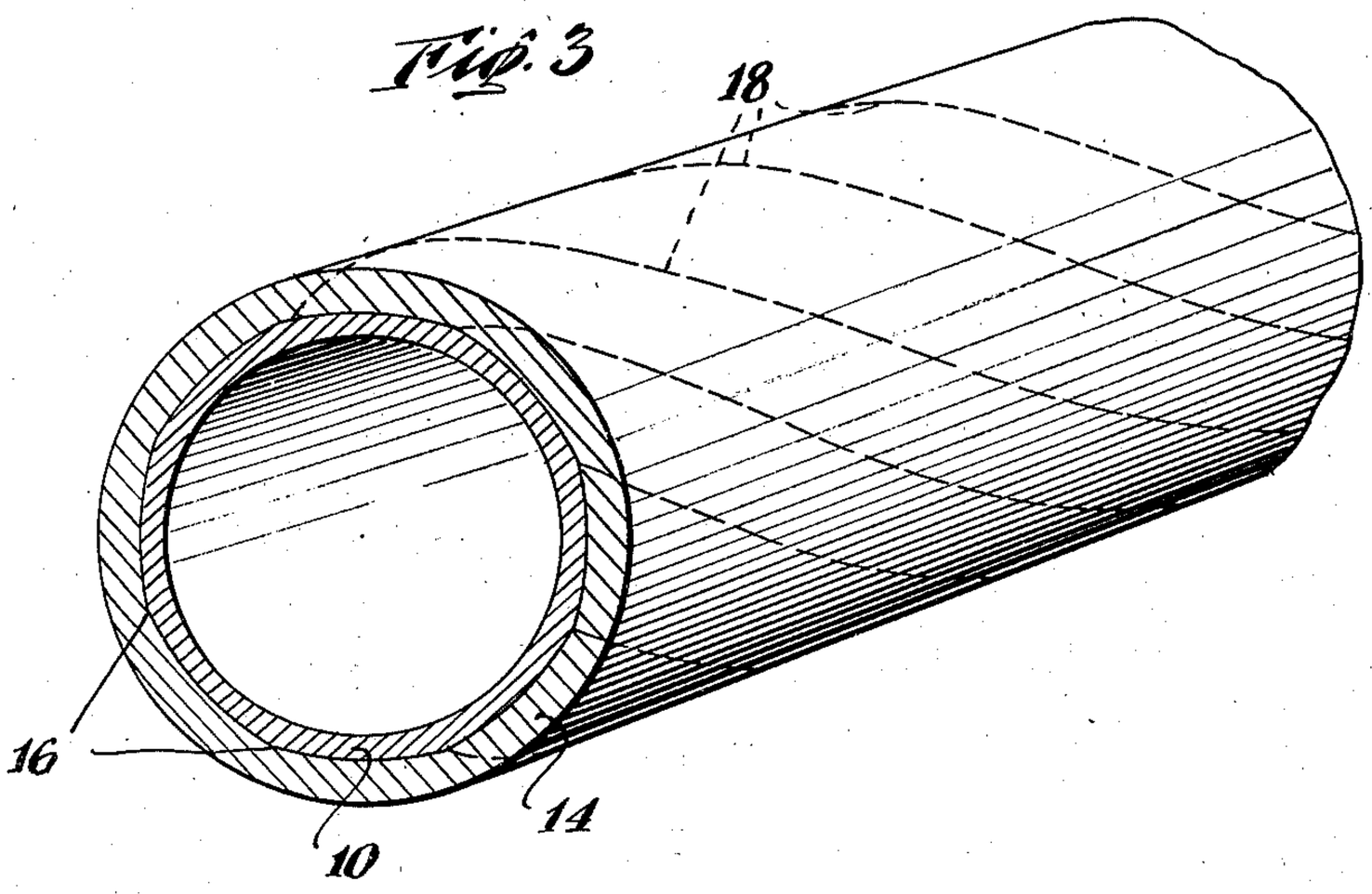

INVENTORS
Percy A. E. Armstrong
Tecumseh Sherman Fitch

BY Alan M. Mann
ATTORNEY

Patented Oct. 7, 1941 2,258,564

UNITED STATES PATENT OFFICE

2,258,564

STAINLESS CLAD PIERCED TUBES

Percy A. E. Armstrong, Westport, Conn., and Tecumseh Sherman Fitch, Washington, Pa.; said Fitch assignor to said Armstrong

Original application March 11, 1940, Serial No. 323,258. Divided and this application April 15, 1941, Serial No. 388,634

3 Claims. (Cl. 138—64)

This application relates to composite steel tubes in which the lining is of high melting point corrosion resistant metal such as nickel or chromium alloy and the outer shell is a mild or low carbon steel. This application is a divisional of our application Ser. No. 323,258, filed March 11, 1940, in which the process of making such tubes is claimed.

The need for tubes of this kind has been recognized and heretofore attempts to make them have been undertaken in accordance with which an annular steel billet was prepared with a cylindrical core of corrosion resistant metal and this composite product was intended to be pierced on a standard Mannesmann mill. The difficulty with such a process is that the strain exerted in the piercing operation is sufficient to tear apart any bond that may exist between the cylindrical core and the outer annular shell.

In accordance with our invention, we start with a core of corrosion resistant metal which instead of being cylindrical is square in cross section, or has a cross section which is of an angular nature such as a hexagon or octagon. This is enclosed (either by casting or, preferably, in the manner later illustrated) in an outer shell of a steel which ordinarily will be corrodible and relatively ductile such as a low carbon or low alloy steel, which is also preferably square or at least is formed with oppositely disposed flat sides which permit the composite body to be rolled between flat faced rolls. This flat rolling effects a weld between the core and the outer cover. In order to assure that such a weld will be accomplished, the corrosion resistant metal (or even better, both the corrosion resistant metal and the faces of the corrodible metal that are to be welded with it) should first be electroplated with iron under conditions which will prevent the formation of a layer of intervening oxide as set forth in Armstrong Patent No. 1,997,538, dated April 9, 1935.

By hot rolling the original assembly or billet on its flat sides, an excellent bond or weld can be obtained between the core and the outer cover. Subsequently, the resulting billet is passed through a series of rolls to reduce it to a circular cross section. During such rolling, the change in shape of the cover and core will not be uniform, and it will be found that when the billet has been reduced to its circular form, the core will still maintain to a substantial extent its original angular shape and the corners will form projections or irregularities extending into the covering steel which will serve to key the two portions together. In other words, the rolling operations greatly increase any natural bond between the two types of metal and this rolling is such as to create an interlock between the two. On the other hand, if one starts with a cylindrical core having an annular covering around it, and should attempt to create a bond by rolling, there is a great tendency for the cover to be actually broken away at the sides during each rolling pass, and once the bond is broken it cannot be restored.

When a billet has been prepared in accordance with our invention, it can be passed through a Mannesmann mill and pierced without any difficulty and without any noticeable tendency for the core and covering material to separate.

Our invention can be readily understood by reference to the accompanying drawing, in which Fig. 1 is a section of an assembly made up ready for rolling; Fig. 2 shows a sectional view of the billet prior to piercing and Fig. 3 shows a perspective view of a section of the finished product.

In the drawing, 10 is a bar of stainless steel or other high melting point corrosion resistant metal (say for example a usual type of alloy containing 18% chromium and 8% nickel) which has been electroplated with iron under conditions to avoid any intervening layer of oxide as described in said Armstrong Patent No. 1,997,538. In this example the core bar 10 was surrounded by a cover of low carbon steel 14 (e. g. a steel containing .15% to .30% carbon) which is here shown as made up of two pieces which are welded together after having been shaped to receive bar 10 by machining or by the use of a dolly or by rolling. This assembly, after the usual heating, is passed through flat rolls first on one axis and then on another until all of the elements are welded into a substantially integral mass. Subsequently the resulting billet is passed through a usual series of rolls to reduce it to round form, after which it usually will be turned or machined to accurate circular cross section. If a section of the resulting round product is taken, it will be found that the stainless steel core 10 has somewhat approached the circular form but still has projections as indicated at 16 where the former corners originally appeared. These corners lock the core 10 to the casing 14 as shown in Fig. 2.

This billet is now passed through a usual type of Mannesmann mill in which it is pierced and ordinarily enlarged in diameter (though such an enlargement is not necessary as the reduced cross sectional area of metal may if desired be made

up by increased length). If a section of the pierced tube thus formed is examined, it will be found that the corners 16 are still present and that these have been given a substantial twist so that they spiral through the tube as indicated by the dotted lines 18 in Fig. 3. Ordinarily, the corrosion resistant metal is stiffer than the low carbon steel cover and the presence of these spirally arranged projections tends to stiffen the whole tube to a greater extent than would be the case if the core were of uniform thickness. Apparently there is no appreciable tendency for the core and casing to separate.

As already stated, the core may have any desired number of sides, which means that it will have a corresponding number of projections such as those indicated at 16 in the drawing, but the projections that remain will be found to be spirally arranged as described. While we state that the core may have any desired number of sides, this statement must be given a reasonable interpretation. Naturally the number of sides must not be increased to the point where the projections of the core into the covering metal become insignificant, as it is of the very essence of our invention that the projections of the core that remain after the billet has been rolled to round form must be of sufficient magnitude to key together the metal of the core and the covering metal and thereby prevent relative movement between them under the torsional strains that result from piercing operations such as those of the Mannesmann mill.

What we claim is:

1. A composite tube comprising an outer cover of corrodible steel and an inner lining of corrosion-resistant metal firmly welded to such cover by hot mechanical working, such inner lining having projections which run spirally along the tube and which extend a sufficient distance into the outer cover to key together the inner lining and the cover and thereby prevent relative rotation of the two parts.

2. A tube as specified in claim 1 in which the lining is a chromium alloy and the cover is a low carbon steel.

3. A tube as specified in claim 1 in which the lining is nickel and the cover is a low carbon steel.

PERCY A. E. ARMSTRONG.
TECUMSEH SHERMAN FITCH.